HAL
open science

A Lineage in Time : The Vicissitudes of the rNgog pa bka' brgyud from the 11th through 19th centuries

Cécile Ducher

To cite this version:

Cécile Ducher. A Lineage in Time : The Vicissitudes of the rNgog pa bka' brgyud from the 11th through 19th centuries. History. Université Paris sciences et lettres, 2017. English. NNT : 2017PSLEP052 . tel-02106815

HAL Id: tel-02106815

https://theses.hal.science/tel-02106815

Submitted on 23 Apr 2019

HAL is a multi-disciplinary open access archive for the deposit and dissemination of scientific research documents, whether they are published or not. The documents may come from teaching and research institutions in France or abroad, or from public or private research centers.

L'archive ouverte pluridisciplinaire **HAL**, est destinée au dépôt et à la diffusion de documents scientifiques de niveau recherche, publiés ou non, émanant des établissements d'enseignement et de recherche français ou étrangers, des laboratoires publics ou privés.

THÈSE DE DOCTORAT

de l'Université de recherche Paris Sciences et Lettres
PSL Research University

Préparée à l'École Pratique des Hautes Études

A Lineage in Time:
The Vicissitudes of the rNgog pa bka' brgyud from the 11th through 19th c.
Un lignage à l'épreuve du temps :
Les vicissitudes des rNgog pa bka' brgyud du XIe au XIXe siècle.

École doctorale de l'EPHE – ED 472

Spécialité : Religions et systèmes de pensée

COMPOSITION DU JURY :

M. Matthew Kapstein
Ecole Pratique des Hautes Etudes
Directeur de thèse

Mme Carmen Meinert
CERES / Ruhr Universität Bochum
Rapporteur

M. Charles Ramble (Président du Jury)
Ecole Pratique des Hautes Etudes
Examinateur

M. Nicolas Sihlé
Centre d'Etudes Himalayennes, CNRS
Examinateur

M. Jan-Ulrich Sobisch
CERES / Ruhr Universität Bochum
Rapporteur

Soutenue par :

Cécile DUCHER

le 11 décembre 2017

Dirigée par :

Matthew Kapstein

École Pratique des Hautes Études | PSL Research University Paris

To the masters of the Mar rngog bka’ brgyud lineage.

Plate 1: rNgog Zhe sdang rdo rje in the commentary of the *Two Segments* by gTsang gi bande sNgo tsha chos sku (NKCK, 7: 92)

Acknowledgements

The completion of this dissertation has depended on so many people and I am happy to finally be able to thank some of them. First, I would like to express my gratitude to my supervisor, Matthew Kapstein, whose work is a model of precision and breadth to which I can only aspire; the insightful key-instructions on the way to proceed with my research and always to-the-point feedbacks on parts of the manuscript were always welcome. Other members of my jury also contributed to the significant improvement of my work and the pleasant time spent studying at the EPHE. Charles Ramble has shown several times the trust he placed in me by provided stimulating works experience such as compiling a concordance for his archival documents and organizing conferences. Observing the way he conducts his research is always source of amazement and inspiration. Nicolas Sihlé read previous draft of the present work. His generous, precise, and rich suggestions challenged me to reexamine preconceptions and helped me make giant step instead of my usual ant way to proceed. The work of Jan-Ulrich Sobisch has for long been a source of inspiration, and I particularly admire his skill at combining precise academic scholarship with a true appreciation of the traditions he describes. His presentation during our common panel on "Tibetan Mahāmudrā Traditions" at the XIVth IATS in Bergen in June 2016 was for me a perfect example of the kind of approach I would like to follow in the future. Carmen Meinert also accepted to be part of this jury although we have not met each other yet. Her scholarship, although not directly related to my own work, gave me rich insights and avenues for future research.

Several other scholars deserve my gratitude for generously aiding me in my research and exchanging with me information, insights, and texts. Particularly remembered are Matthew Akester, Hubert Decleer, Lewis Doney, Franz-Karl Ehrhard, Mathias Fermer, Jörg Heimbel, Haoran Hou, Maho Iuchi, Kazuo Kano, Ralf Kramer, Thierry Lamouroux, Dan Martin, Charles Manson, Klaus-Dieter Mathes, Peter Alan Roberts, Per Sørensen, Cyrus Stearns, Péter-Dániel Szántó, and Marco Walther. Special thanks are due to Mathias Fermer who answered my many questions and read parts of this manuscript with an amazing speed and precision. Our common interest for the history of lHo ka in the past six centuries made for particularly exciting exchanges of emails.

Two Tibetan scholars, Che tshang Rin po che and mKhan po Chos grags bstan 'phel Rin po che answered my questions and gave me precious information on two collections I explored for this dissertation, the *Treasury of bKa' brgyud Mantras* and the *'Bri gung bka' brgyud chos mdzod chen mo*.

It is due to the generosity of different institutions that I was able to complete this dissertation in comfortable circumstances. Paris Novi Mundi Université (PresHESAM) awarded me with a three-year PhD scholarship. My laboratory, the UMR 8155 of the CRCAO (CNRS), and the École Doctorale of the EPHE partly covered the costs to participate in the XIIIth and XIVth Seminar of the International Association for Tibetan Studies (IATS) in Ulaanbaatar (Mongolia) and Bergen (Norway), and the 4th International Seminar of Young Tibetologists (ISYT), in Leipzig (Germany). In addition, I am indebted to Matthew Kapstein and Charles Ramble for providing me with the responsibility of the Centre de Documentation de l'Aire Tibétaine (CDAT) from 2010 to 2016.

Finally, I like to express my heartfelt thanks to colleagues and friends who offered their linguistic and technical help. Alexander Smith in particular read all chapters of the present work in order to edit its English. He had a particularly difficult job as he did not have an overview of the complete dissertation and did not get the chapters in the proper order. He did a magnificent job, however, exceeding the call of proofreading by commenting and explaining why such expression should or should not be used. His remarks were sometimes so hilarious that it was always a pleasure to receive them. His encouragements on my improving English were also appreciated, although I fear that there is still a long way to go. Ralf Kramer and Lewis Doney, who respectively edited my book on Mar pa's biographies (Ducher 2017) and my article of the *Sras mkhar ma* (Ducher 2016a), also contributed to the improvement of my writing style and academic accuracy. Sylvestre Brechotte significantly improved the genealogic trees drawn on InDesign present in this work.

Last, but not least, are my husband Stéphane and daughter Sara. The former discussed with me all parts of this work and always offered relevant advice. The two were patient when I was busy or irritated, and supported me with their love. Merci du fond du coeur!

Table of content

Acknowledgements 5
Table of content 7
List of tables and charts 11
Writing conventions 12
Abbreviations 14

Introduction 16
Literature review 21
Outline 25

PART ONE: Orientations 30
CHAPTER ONE: Sources 31
1.1. Methodology and treatment of sources 31
1.1.1. Biography, hagiography, rosary, religious history, and record of teachings received 31
1.1.2. Why were the *Rosaries* written? 39
1.2. Origin of the sources 41
1.2.1. The gNas bcu lha khang library 41
1.2.1. Texts of the Mar rNgog tradition in the gNas bcu lha khang library 45
1.3. Historiographical narratives 48
1.3.1. The *Rosaries* 48
1.3.2. The *Deb ther dmar po* by ’Tshal pa Kun dga’ rdo rje (1309-1364); 1346 51
1.3.3. The *lHo rong chos ’byung* by Tshe dbang rgyal (15th c.); 1446-1447. 52
1.3.4. The *Deb ther sngon po* by ’Gos lo tsā ba gZhon nu dpal (1392-1481); 1476 53
1.3.5. The *mKhas pa’i dga’ ston* by gTsug lag phreng ba (1504-1566); 1545-1565 54
1.3.6. The *Pad dkar chos ’byung* by Padma dkar po (1527-1592); 1575 54
1.3.7. Other historiographical sources 55
1.3.8. Records of teachings received 56
1.4. Tantric materials 59
1.4.1. The *rNgog chos skor phyogs bsgrigs* (NKCK) and the *rNgog slob brgyud dang bcas pa’i gsung ’bum* (NKSB) 60
1.4.2. ’Bri gung bka’ brgyud collections containing texts from the rNgog tradition 66
1.4.3. The *bKa’ brgyud sngags mdzod* (KGND) 70
Sources 71
Editions 75
Content 78
Legacy 84

CHAPTER TWO: rNgog Traditions 86
2.1. The seven maṇḍalas 86
2.2. Transmissions rNgog Chos rdor received from Mar pa 88
2.2.1. Hevajra 91
The specificities of the rNgog transmission of *Hevajra* 91
Merging and Transference (*bSre ’pho*) 95
The rNgog lineage of *Hevajra* 98
2.2.1. Catuṣpīṭha 100
The rNgog tradition of *Catuṣpīṭha* 100
The rNgog lineage of *Catuṣpīṭha* 104
2.2.3. Mahāmāyā 106
2.2.4. Dud sol ma (Dhūmāṅgārī) 109
2.3. A Transmission not from Mar pa: Mañjuśrīnāmasaṃgīti 112
The rNgog tradition of *Nāmasaṃgīti* 112
The rNgog lineage of *Nāmasaṃgīti* 117

CHAPTER THREE: Lineages **121**
3.1. What is a lineage? 121
Definition 121
From personal transmission to lineage 124
Lineage or order? 127
Hereditary lineage 129
3.2 Articulation of the hereditary and the religious in the Rosaries 132
Structural fusion 132
Mar pa as the ancestor 133
Mar pa's Relics 134
3.3. Transmission of capital 135
Economic capital 138
Religious capital 144
Social capital 150
Symbolic capital and violence 155

II. PART TWO: A Lineage in Time **158**
CHAPTER ONE: Religious Ancestors **159**
1.1. The life of Mar pa Chos kyi blo gros 160
1.1.1. Mar pa's biographical tradition 160
1.1.2. Mar pa's life according to the rNgog family's accounts 162
Mar pa's ancestors and offspring 162
Mar pa's place of origin 164
Mar pa's youth and first exposure to the Dharma 165
Mar pa's training in India 167
The final installation in Tibet 169
Dates 169
1.2. Mar pa's masters 171
1.2.1. Nāropa and the origins of the bKa' brgyud lineage 171
Nāropa's life as described in rNgog accounts 171
Nāropa's spiritual ancestry: the "Four Current" (*bka' babs bzhi*) 173
1.2.2. Maitripa 180
1.2.3. Śāntibhadra 183
1.2.4. Jñānagarbha 185
1.2.5. The yoginī 187
1.3. Mar pa's disciples: the "four pillars" and their lineages 189
1.3.1. rNgog ston chos rdor from gZhung 191
1.3.2. mTshur ston dBang nge from Dol 192
1.3.3. Mes ston Tshon po from gTsang rong 198
1.3.4. Mi la ras pa from Gung thang 201
1.3.5. Mar pa mGo yag 203

CHAPTER TWO: Bone Ancestors and Related Families **207**
2.1. Bone Ancestors: pre-11th century history of the clan 207
2.2. Branches of the rNgog clan and related family lineages 215
2.2.1. rNgog Legs pa'i shes rab and Blo ldan shes rab 215
2.2.3. The rDog from gTsang 216
2.2.4. rDog/rNgog Byang chub 'byung gnas 219

CHAPTER THREE: The Lives of the rNgog from gZhung **221**
3.1. rNgog Chos sku rdo rje **221**
3.1.1. Youth 221
3.1.2. The relationship with with Mar pa 223
3.1.3. Chos rdor's relationship with other masters *226*
3.1.4. Daily life 231

3.1.5. Chos rdor's disciples and their lineages 235
3.1.5.1. Ram rTsan can 236
3.1.5.2. sPa lBa ba can 239
3.1.5.3. rDog Mun ba can and dMyal pa rDog chung pa 239

3.2. rNgog mDo sde **242**
3.2.1. Past life and rebirth as Chos rdor's son 242
3.2.2. Education 245
3.2.2.1. Mar pa and his father 245
3.2.2.2. His father's students 246
3.2.2.3. Lo tsā bas 246
3.2.3. Relics 258
3.2.4. Offspring 264
3.2.4.1. The two branches of the clan 264
3.2.4.2. Jo Tshul and the gTsang tsha branch 265
3.2.4.3. Untimely death of his children 267
3.2.5. Death 268
3.2.6. Disciples 269
3.2.6.1. rTsags Dar ma rgyal po 271
3.2.6.2. 'Gar ston bKra shis dbang phyug 272
3.2.6.3. gTsang gi bande sNgo tsha chos sku 273
3.2.6.4. Mal nag pa 274
3.2.6.5. Ram rDo rje grags 276
3.2.6.6. gTsang sMra seng 277
3.2.6.7. Cog ro Chos rgyal 278
3.2.6.8. sMar pa Shes rab ye shes 280
3.2.6.8. Tshe'u bande dar re? 281
3.2.6.9. Bla ma zhang? 281

3.3. rGyal tsha branch **285**
3.3.1. Thogs med grags (1108-1144) 286
3.3.2. rGyal tsha Ra mo (1134-1170) 289
3.3.3. rGyal tsha rDor seng (1140-1207) 295
3.3.4. Later rGyal tsha masters 297
3.4. gTsang tsha branch **301**
3.4.1. rNgog Kun dga' rdo rje (1145-1222) 301
3.4.2. rNgog gZi bjid grags pa (1190-1269) 305
3.4.3. rNgog rGyal po dga' (1193-1272) 306
3.4.4. rNgog Rin chen bzang po (1245-1319) 307
3.4.5. rNgog Seng ge sgra and his sons 311
rNgog Seng ge sgra (1235-1308) 311
rNgog Rin chen rgyal mtshan (1271?-1326?) 315
3.4.6. rNgog Chos kyi rgyal mtshan (1283-1359) 317
3.4.7. rNgog Don grub dpal (1331?-1398?) 320
3.4.8. rNgog Sangs rgyas yon tan (14th-15th c.) 323
rNgog Rin chen dpal bzang po (15th c.) 325

CHAPTER FOUR: Byang chub dpal (1360-1446) **327**
4.1. The seven generations 328
4.2. Education 330
4.3. Abbacy 331
4.4. From adversity to success in the power hub of Central Tibet 332
4.5. The royal court, 'Gos Lo tsā ba, and Lo chen bSod nams rgya mstho 334
4.6. Passing on the legacy 336
4.6.1. Kun dga' dpal 'byor (1428-1476) and the 'Brug pa bka brgyud 337

4.6.2. Ngag dbang grags pa and the sTag lung bka' brgyud 338
4.6.3. The Yar rgyab family and the Sa skya 338
4.7. The fourth Zhwa dmar Chos grags ye shes (1453-1524) 340

CHAPTER FIVE: the gZhung valley after Byang chub dpal 344
5.1. The situation at Byang chub dpal's death 344
5.2. Succession in the gTsang tsha branch: sPre'u zhing 345
5.2.1. rNgog Byang chub dpal grub 345
5.2.2. rNgog Byang chub grags pa 346
5.2.3. rNgog Blo gros dpal bzang and the transmission to Kun dga' grol mchog 346
5.3. Succession in the rGyal tsha branch: Thar pa gling 348
5.3.1. rNgog bSod nams don grub 348
5.3.2. rNgog bSod nams lhun po 349
5.3.3. rNgog bSod nams bstan 'dzin and Tshar chen Blo gsal rgya mtsho 350
5.4. Last traces of the rNgog and transmission to Gong dkar chos sde Monastery 351
5.4.1. rNgog 'Jam dbyangs 'od zer 352
5.4.2. Pilgrims 354
5.5. sPre'u zhing today 356

Conclusion 361

APPENDICES 365
Appendix 1: Critical edition and translation 366
Appendix 2: Summarizing chart 423
Appendix 3: Titles in NKSB, with correspondences in other editions 426
Appendix 4: Table of content of the bKa' brgyud sngags mdzod 437
Appendix 5 : Maps and photographs 444

Résumé en français 448

Bibliography 505
Tibetan sources, biographies on the rNgog 505
Tibetan sources, collections 506
Tibetan sources, individual texts 508
European languages sources 515

List of tables and charts

Plates

Plate 1, p. 4: rNgog Zhe sdang rdo rje in the commentary of the *Two Segments* by gTsang gi bande sNgo tsha chos sku (NKCK, 7: 92)

Plate 2, p. 28: Genealogical tree of the gTsang tsha and rGyal tsha lines of the rNgog hereditary lineage, from ST1, ST2, ST3, *Kun dga' grol mchog rnam thar*, *mGon po bSod nams dpal ldan rnam thar* and *Tshar chen rnam thar*

Plate 3, p. 91: Maṇḍala of Hevajra with 8 *ḍākinī*s, Tachikawa 1991, 182 (maṇḍala 107)

Plate 4, p. 92: Maṇḍala of Nairātmyā with 14 *ḍākinī*s, Tachikawa 1991, 183 (maṇḍala 108)

Plate 5, p. 93: *Pañjara* Maṇḍala: five 9-deity maṇḍalas with a central Hevajra and 8 surrounding *ḍākinī*s of the five families. Tachikawa 1991, 186-187 (maṇḍala 110)

Plate 6, p. 100: *Catuṣpīṭha* Maṇḍala: Jñāneśvarī with 12 *ḍākinī*s. Tachikawa 1991, 155 (maṇḍala 88)

Plate 7, p. 101: *Catuṣpīṭha* Maṇḍala: Yogāmbara with 76 accompanying ḍākinīs and ḍākas. Tachiwaka 1991, 152-154 (maṇḍala 87)

Plate 8, p. 106: *Mahāmāyā* maṇḍala: Sangs rgyas he ru ka with 4 ḍākinīs. Tachikawa 1991, 151-152 (maṇḍala 86)

Plate 9, p. 112: *Nāmasaṃgīti* Maṇḍala: Mañjuśrī with buddhas and bodhisattvas of the Vajra, Ratna, Padma and Karma families and offering deities. Tachikawa 1991, 82-93 (maṇḍala 41B)

Plate 10, p. 162: Mar pa's ancestors as described in ST1

Plate 11, p. 207: Bone ancestors according to ST1

Plate 12, p. 284: rGyal tsha one according to ST1, ST2, *Tshar chen rnam thar*

Plate 13, p. 300: gTsang tsha line according to ST1, ST2, *'Phrin las rnam rgyal gsan yig*

Plate 14, p. 532: Dud sol ma from a sMar pa bka' brgyud lineage, with Mar pa, rNgog Chos rdor, rNgog mDo sde, and sMar pa Shes rab ye shes in the upper register. Bordier Collection (Béguin 2013, 92)

Charts

Chart 1, p. 48: Chart of the data provided in DC (together with the abbreviations)

Chart 2, p. 171: Summarizing chart of the dates of birth and death of Mar pa

Chart 3, p. 172: Tilopa's human masters

Chart 4, p. 270: mDo sde's Disciples according to various sources

Writing conventions

For transliteration of Tibetan, I use the Extended Wylie Transliteration Scheme, as described on the THL website: http://www.thlib.org/reference/transliteration/#!essay=/thl/ewts (accessed 2017/09/21). Differences appear in the transcription of Sanskrit letters, where diacritics are used rather than a capital letter, and letters joined without a plus sign (*dhī* instead of *d+hI*).

Words are capitalized at the radical letter and no hyphen is used between words (bSod nams instead of Bsod-nams). Composite names that might be compound of place names, titles and personal names, etc., have the head letters of the distinct units capitalized (rNgog gZhung Chos rdor).

Sanskrit and Tibetan words that occur in the text are given with diacritics and italicized (*sādhana*, *sgrub thabs*). Titles of texts and collections are given in italics with the first radical letter capitalized (*bKa' brgyud sngags mdzod*). Only proper names of persons and places (rNgog mDo sde, Śāntibhadra, sPre'u zhing) and terms that are commonly applied outside the field of Buddhist studies (maṇḍala, stūpa) are given without italics but with diacritics). Tibetan commonly used words such as lama (*bla ma*) and rinpoche (*rin po che*) are given by their English transliteration. The English name of specific practices is given without capital letter (for example, mahāmudrā, inner heat, luminosity). Sanskrit equivalents for Tibetan terms that are not attested are marked with an asterisk (e.g. **Guhyāpanna* for the Tibetan *gSang ldan*).

According to Tibetan tradition, a child is one year old at birth and advances one year in age at the Tibetan New Year. This custom of counting is preserved systematically in the translation and sometimes in the study. When this is the case, the expression "in his 8th year" is used rather than "at seven."

Although in general titles of work are in italics, and proper nouns are in roman characters, in the case of tantras, the difference is sometimes difficult to make, as the term "Hevajra" can either refer to the *Hevajratantra* (also called *Hevajra Root Tantra* and the *Two Segments*), the *Hevajra* cyle (that is to say texts related to the *Hevajratantra* but not necessarily the root tantra), or to the deity Hevajra that is at the centre of the maṇḍala. As Szantó remarks regarding the *Catuṣpīṭha* cult:[1]

> The most overwhelmingly attested form for the title is *Catuṣpīṭha*, and this title can refer to both the *tantra* […] and the system of practices and texts at the basis of which the *tantra* supposedly stands. In other words, when an author says something akin to "according to the *Catuṣpīṭha*" it is not necessarily the case that the author refers to the *tantra*.

[1] Szantó 2012, 25-26.

In Tibetan, the term *rgyud* is not systematically repeated, and it can be cumbersome to systematically add “tantra” when giving the name in Sanskrit. In the present work, I have therefore adopted the following rules:

- Italicize the titles of tantras and add the name “tantra” when it is clear that a specific tantra is meant (“He studied the *Hevajratantra*”).
- Italicize but without the term “tantra” when the cycle as a whole is meant (“He received *Nairātmyā*”)
- No italics when it is the deity that is referred to (“He had a vision of Nairātmyā.”)

Abbreviations

Tibetan titles are referred to by either their author's name or the name of the author and the reference to his *gSung 'bum*. An abbreviation is used in the case of frequently used titles. Abbreviation can be found in the bibliography at the following entries:

'Bri gung gdan rabs	**bsTan 'dzin Padma'i rgyal mtshan, 'Bri gung Che tshang 04**: *'Bri gung gdan rabs gser phreng: nges don bstan pa'i snying po mgon po 'bri gung pa chen po'i gdan rabs chos kyi byung tshul gser gyi phreng ba*.
Bu ston *gsan yig*	**Bu ston rin chen grub**: "Bla ma dam pa rnams kyis rjes su gzung ba'i tshul bka' drin rjes su dran par byed pa."
Bu ston's *Yogatantra*	**Bu ston rin chen grub**: "rNal 'byor rgyud kyi rgya mtshor 'jug pa'i gru gzings."
dBus gtsang gnas yig	**Kaḥ thog tu Chos kyi rgya tsho** *: Gangs ljongs dbus gtsang gnas skor lam yig nor bu zla shel gyi so do*.
BCZP	**Byang chub bzang po**: "Brgyud pa yid bzhin nor bu rnam par thar pa."
DC	**dPal brtsegs:** *'Bras spungs dgon du gzhugs su gsol ba'i dpe rnying dkar chag.* (= Drepung Catalog)
Deb dmar	**Tshal pa Kun dga' rdo rje***: Deb ther dmar po. The Red Annals (Part I).*
Deb sngon	**'Gos gZhon nu dpal:** *Deb ther sngon po*.
dGe ye History	**dGe ye Tshul khrims seng ge**: *History of Indo-Tibetan Buddhism by dGe ye Tshul Khrims seng ge*.
DK-DZO	**A mgon Rin po che***'Bri gung bka' brgyud chos mdzod chen mo*.
DL5 *thob yig*	**Dalai bla ma 05 :** "Zab pa dang rgya che ba'i dam pa'i chos kyi thob yig gang ga'i chu rgyun."
DND	**'Jam mgon kong sprul Blo gros mtha' yas**: *gDams ngag mdzod*.
dPa' bo II	**dPa' bo 02 gTsug lag phreng ba** *rJe btsun mar pa'i rnam par thar pa grub pa'i ngo mtshar brjod pa*.
Gong dkar gsan yig	**Gong dkar ba Kun dga' rnam rgyal***: rDzong pa kun dga' rnam rgyal gyi gsan yig*.
Gong dkar ba rnam thar	**rGya ston Byang chub dbang rgyal:** *rDzong pa kun dga' rnam rgyal gyi rnam thar*.
gSang 'dus chos 'byung	**Bu ston rin chen grub**: "gSang ba 'dus pa'i rgyud 'grel gyi bshad thabs kyi yan lag gsang ba'i sgo 'byed." In: *Bu ston rin chen grub dang sgra tshad pa rin chen rnam rgyal gyi gsung 'bum*.
KGND	**'Jam mgon kong sprul Blo gros mtha' yas**: *bKa' brgyud sngags mdzod* (1982)
KGNDdkar chag	**'Jam mgon kong sprul Blo gros mtha' yas**: "Dpal ldan mar rngog bka' brgyud kyi gser chos rgyud sde rin po che rnams kyi gleng gzhi dang brgyud pa'i yi ge som nyi'i mun sel rin chen zla zer."
KP *rNam thar*	**A ba dhū ti pa Rin chen rnam rgyal**: "dPal ldan bla ma dam pa'i mdzad pa rmad du byung ba ngo mtshar bdud rtsi'i thigs pa."
KSTC	**Mar ston Tshul khrims 'byung gnas:** "Sgra bsgyur chen po mar pa'i rnam par thar pa."
K3 Tanjur	**Karma pa 03 Rang byung rdo rje**: "Rje rang byung rdo rje'i thugs dam bstan 'gyur gyi dkar chag."
LGNT	**dPal brtsegs:** *Bod kyi lo rgyus rnam thar phyogs bsgrigs*.
lHo rong chos 'byung	**rTa tshag tshe dbang rgyal:** *lHo rong chos 'byung*.

mGon po bSod nams mchog ldan rnam thar
Dalai bla ma 05 : "Dus gsum rgyal ba'i mkhyen brtse nus pa'i rang gzugs dkyil 'khor rgya mtsho'i gtso bo khyab bdag rdo rje sems dpa'i ngo bo mgon po bsod nams mchog ldan bstan pa'i rgyal mtshan dpal bzang po'i rnam par thar pa ngo mtshar dad pa'i rlabs phreng."

mGur mtsho **Karma pa 08 Mi bskyod rdo rje**: *bKa' brgyud mgur mtsho, mchog gi dngos grub mngon du byed pa'i myur lam bka' brgyud bla ma rnams kyi rdo rje'i mgur dbyangs ye shes char 'bebs rang grol lhun grub bde chen rab 'bar nges don rgya mtsho'i snying po*.

mKhas pa'i dga' ston **dPa' bo 02 gTsug lag phreng ba***: Chos 'byung mkhas pa'i dga' ston*.

Mon rtse pa **Mon rtse pa Kun dga' dpal ldan:** *Dkar brgyud gser phreng: A Golden Rosary of Lives of Eminent Gurus*.

MPSB **dPal brtsegs:** *Lho brag mar pa lo tsā'i gsung 'bum*.

Ngor chen thob yig **Ngor chen 01 Kun dga' bzang po**: "thob yig rgya mtsho."

NKCK **dPal brtsegs:** *rNgog chos skor phyogs bsgrigs*.

NKSB **dPal brtsegs:** *rNgog slob brgyud dang bcas pa'i gsung 'bum*.

Pad dkar chos 'byung **Padma dkar po:** "Chos 'byung bstan pa'i padma rgyas pa'i nyin byed."

Potala Catalog **Pho brang po ta la do dam khru'u rig dngos zhib 'jug khang:** *Pho brang po ta lar tshags pa'i bka' brgyud pa'i gsung 'bum dkar chag*.

Phyag chen rgya gzhung **Unknown**: *Phyag chen rgya gzhung: collected texts of the Mahāmudrā practice translated from Sanskrit representing the tradition which passed in the Mar-pa Bka'-brgyud-pa*.

rDog rabs **Nam mkha' bsod nams:** "rDog rabs gsal ba'i me long."

rGyud sde kun btus **Blo gter dbang po:** *rGyud Sde Kun Btus*.

rNam rab Guide **rNam rab Ngag dbang thub bstan:** *rNam rab mthong smon dwags po grwa tshang gi lo rgyus*.

Rosary of Crystal Gems **'Be lo Tshe dbang kun-khyab:** *Sgrub brgyud karma kaṃ tshang brgyud pa rin po che'i rnam par thar pa rab 'byams nor bu zla ba chu shel gyi phreng ba kha skong bcas*.

RT **'Jam mgon kong sprul Blo gros mtha' yas**: *Rin chen gter mdzod chen mo*.

Rwa lo rnam thar **Ye shes sengge***: Rwa lo tsa ba'i rnam thar kun khyab snyan pa'i rnga sgra*.

Rwa lung gser phreng **Sangs rgyas 'bum**: "Skyes mchog mar pa lo tsa'i rnam thar dri med mthong ba don ldan."

SByD **'Jam mgon kong sprul Blo gros mtha' yas**: *Shes bya kun khyab mdzod.*

ST1 **bSod nams dpal**: "Bla ma rngog pa yab sras rim par byon pa'i rnam thar rin po che'i rgyan gyi phreng ba."

ST2 **Rngog Byang chub dpal**: "Rje mar pa nas brgyud pa'i rngog gzhung pa yab sras kyi bla ma'i rnam thar nor bu'i phreng ba."

ST3 **Unknown:** "rJe btsun mar rngog bka' brgyud kyi mdzad rnam mdor bsdus."

sTag lung chos 'byung **sTag lung khri 17 Ngag dbang rnam rgyal***: Chos 'byung ngo mtshar rgya mtsho: A detailed account of the development of Buddhism in Tibet with special emphasis on the Stag-lung Bka'-brgyud-pa*.

Tshar chen rnam thar **Dalai bla ma 05:** "Tshar chen rdo rje 'chang gi rnam thar bstan pa'i nyi 'od."

ZH4 *gSung 'bum* **Yangs can dgon ris med dpe rnying myur skyob khang***: Thams cad mkhyen pa zhwa dmar bzhi pa spyan snga chos kyi grags pa'i gsung 'bum*.

Introduction

The political implosion of the old Tibetan empire during the 9th century left behind a fragmented Tibet. During the 10th and 11th centuries, after decades of "darkness," Tibet and Tibetan Buddhism started to take shape again.[2] It was a period of intense renewal in Tibet, during which many Tibetans went south to India or Nepal to receive Buddhist transmissions which had declined at home. One of these Tibetan translators was Mar pa Chos kyi blo gros (1000?-1081?), an undisciplined young man who first spent some time in Nepal before making extended travels to the jungles and forests of India in order to receive the most sophisticated spiritual technologies of the time, the highest yoga tantras (*niruttaratantras*). Unlike many of his colleagues, Mar pa just passed through the illustrious Buddhist universities and headed for the yogis, foremost among them Nāropa and Maitripa. After some twenty years learning and training in India, accumulating gold and offering it to his masters, Mar pa came back to Tibet in the mid-11th century and settled in lHo brag. His fame soon spread, and disciples gathered. Among them were many sons of good family who dissociated from the old tantras in order to receive the new ones. One such individual was rNgog Chos rdor (1023-1090). He came from an ancient family that traced its roots to the 5th century and prided itself of having famous and distinguished ancestors. Chos rdor was very devoted to Mar pa and received from him several tantric cycles such as *Hevajra*, *Catuṣpīṭha*, and *Mahāmāyā*, in exchange for sumptuous donations. Chos rdor specialized in Mar pa's tantric exegesis, which was particularly distinguished by the key instructions (*gdams ngag*) given by Nāropa, and became an expert in these techniques. He was a layman and had one son, rNgog mDo sde (1078-1154), named like Mar pa's own son, Darma mdo sde. rNgog mDo sde received from Mar pa, his father and his father's disciples all these famous tantric cycles and durably established Mar pa's traditions in Tibet during the first half of the 12th century. He composed most of the texts of the tradition and influenced those that were composed after him. He mastered his father's tradition and requested others that were not part of Mar pa's legacy, such as *Saṃputa* and *Vajravārāhī*. Most symbolically, he gathered in his valley most of Mar pa's relics that remained the seat's most cherished treasure for centuries and defined his style in a way reminiscent of Mar pa's: like his forefather, his chosen deity (*yi dam*) was Hevajra; his protective deity Dud sol ma;[3] and he was a householder.

rNgog mDo sde was not the only one to possess Mar pa's teachings. In fact, lineages claiming descent from Mar pa abounded. In the early 12th century, two of the most celebrated masters were sGam po pa bSod nams rin chen (1079-1153) and Ras chung pa rDo rje grags pa (1084-

[2] Concerning this dark period and how it actually served as a time of insemination of Indian Buddhism for Tibetans, see Dalton 2011. See Davidson 2005 for a description of the way tantric Buddhism was imported again to Tibet and led to a rebirth of its culture.

[3] See II.2.2.1 and II.2.4 for details on these two traditions.

1161). Both were disciples of the mountain yogi Mi la ras pa (1028?-1111?), but each had developed a distinctive "style."[4] Ras chung pa, perhaps closer to Mi la ras pa, initiated the sNyan brgyud lineage centered on the *Cakrasaṃvaratantra*.[5] sGam po pa, who had long been a bKa' gdams pa monk, founded a monastery and developed a specific approach to mahāmudrā that departed from his master's tantric approach.[6] Thus, Ngog mDo sde, Ras chung pa and sGam po pa represented the three main currents of the nascent bKa' brgyud school, with their respective emphasis on tantric exegesis, esoteric practices associated with *Cakrasaṃvara*, and the progressive path (*lam rim*) leading to the realization of mahāmudrā. The three were not strangers: rNgog mDo sde and Ras chung pa are said to meet at least once,[7] and some writings of sGam po pa and mDo sde echo each other, thus evidencing the circulation of at least texts between the two.[8] It is challenging to assess in a few sentences how the three may have been considered at the time, but what is manifest is that in the following centuries the blossoming of the many lines branching off from sGam po pa and one of his disciples, Phag mo gru pa rdo rje rgyal po (1110-1170), the twelve lines called the "four primary and eight secondary bKa' brgyud [traditions]" (*bka' brgyud che bzhi chung brgyad*)[9]—insured the visibility of the Dwags po bka' brgyud tradition,[10] and the consequent canonization of its first three members, Mar pa, Mi la ras pa and sGam po pa (*mar mi dwags gsum*). This simplification of the numerous traditions flourishing in the 12th century made the other key players of the period recede in the background. This dissertation is an attempt to bring one of the three, the rNgog pa bka' brgyud, under the spotlight.

One of the question that motivated the present study was to understand the reasons governing the success of rNgog mDo sde's hereditary lineage and its relative neglect when compared to other bKa' brgyud lineages. By "success," I mean the fact that the rNgog managed to appear as the legitimate heirs of Mar pa, and as such as the most authoritative expounders of some of his tantric transmissions. By "neglect," I allude to the fact that sources on the rNgog were until recently very lacunar, hence that they are not well-known to Tibetans at large and that their traditions would have been lost without the specific efforts of 'Jam mgon Kong sprul blo gros mtha' yas (1813-1899) to revive them (as well as several other disappearing traditions) in one of his five "treasuries," the *Treasury of bKa' brgyud Mantras* (*bka' brgyud sngags mdzod*).[11] There are no straightforward explanations of this, but several perspectives have been adopted in order to advance some possible answers.

---

[4] Yamamoto 2012, 29-31.

[5] Roberts 2007, Sernesi 2007, Sernesi 2011a.

[6] Scheuermann 2015, 9-13.

[7] ST1, 13.

[8] The two are Mar pa's biography by sGam po pa and the historical part of the *Hevajra* commentary by mDo sde. See section II.3.2.

[9] Schiller 2014, 16-17. Without going into detail, it must at least be borne in mind that the numbers four and eight are later systematisations and should not be taken too literally.

[10] The four primary and eight secondary traditions are collectively called Dwags po bka' brgyud (Dwags po is the region where sGam po pa's seat, Dwags lha sgam po, was located), although the term refers also more particularly to sGam po pa's tradition. See Scheuermann 2015, 9, and Smith 2001, 41-42.

[11] See section I.1.4.3.

A first approach is source criticism. Written sources are our door to this period, and, among these, more specifically biographical and historical narratives. As argued in my research on Mar pa's biographies, there exists a large number of narratives on Mar pa's life.[12] Similarly, there are many biographies of Mi la ras pa,[13] and many of Ras chung pa as well.[14] One of the reasons for this is the emphasis placed by the Aural Transmission lineage on biographical writing. As explained by Marta Sernesi,[15] the Aural Transmission instructions are grouped into three Wish-fulfilling Gems (*yid bzhin nor bu skor gsum*):

- The wish-fulfilling gem of the lineage;
- The wish-fulfilling gem of the maturation path;
- The wish-fulfilling gem of the liberation path.[16]

The first, the wish-fulfilling gem of the lineage, is defined as "the instruction of the *nirmāṇakāya* which externally cuts doubts."[17] It is embodied by that which establishes the characteristics of the master and the disciple, that is to say the biographies of the lineage successors.[18] Thus, to establish the qualities of the master by narrating the story of his "complete liberation" (*rnam thar*) is the first, fundamental step in the Aural Transmission path, and it explains the importance members of this lineage attached to the composition of biographies, often in the form of golden rosaries. One of the late holders of this movement was gTsang smyon He ru ka (1452-1507). He, in particular, composed long biographies of Mar pa and Mi la ras pa. He was a consummate writer and a skilled communicator. The printing and large distribution of his works ensured their large success, and the consequent place Mar pa and Mi la ras pa occupied in the Tibetan religious landscape as role-models for generations of bKa' brgyud pas of all orders.[19] Thus, a first reason that explains that we know well Mar pa and Mi la ras pa (although the exact details of their life-story is shrouded by centuries of accumulated literature) is that they were the objects of many biographies written within the Aural Transmission.

A second reason for this is the proliferation earlier mentioned of bKa' brgyud schools after sGam po pa. All four primary and secondary bKa' brgyud orders[20] relate to Mar pa, Mi la ras pa and sGam po pa as their ancestors. Although their emphasis on biographical writing may not have been as pronounced as it was in the Aural Transmission, the sheer amount of sub-schools ensured a large number of biographies of Mar pa, Mi la ras pa, and sGam po pa, often writing in the form of "rosary," that is to say collections of successive biographies.[21]

---

[12] Ducher 2015, esp. 32-38.

[13] Quintman 2014.

[14] Roberts 2007.

[15] Sernesi 2010, 404-408. I'm following her lead for most of this section's explanations.

[16] *brgyud pa yid bzhin nor bu; smin lam yid bzhin nor bu; grol lam yid bzhin nor bu.*

[17] *phyi sgro 'dogs gcod par byed pa sprul sku'i gdams ngag.*

[18] See sources listed by Sernesi 2010, p. 405, n. 12.

[19] Sernesi 2011b, Quintman 2014, 125-134.

[20] For my use of the terms lineage, order, movement, etc., see section I.3.1.

[21] See section I.1.1.1 for a definition of this genre.

The combination of these two factors explains the disproportionate quantity of biographies on, first, Mar pa and Mi la ras pa, and second, Ras chung pa and sGam po pa. This is turn enlightens us on why, today as yesterday, we remember Mar pa, Mi la ras pa and sGam po pa, and to some extent Ras chung pa, better than we do rNgog mDo sde and his hereditary lineage. The rNgog did have a culture of exegetical as well as biographical writings. All rNgog Tradition commentaries of *Hevajra* for instance contain a section that "explains who brought the [*Hevajra* transmission] in the human realm (*mi yul du sus spyan drangs pa bshad pa*).[22] For some reason, however, this section always stops with rNgog Chos rdor or, if it mentions next lineage-holders, does not provide much details. The rNgog also wrote specific narratives recounting the life of Nāropa and Mar pa,[23] but they did not compose a comprehensive account of their own lineage until the late 14th century, and even then the account in question was far from being as extensive as the other biographies of Mar pa, Mi la ras pa and sGam po pa.[24] Thus the disproportionate representation of the latter explains that they are much better remembered than the rNgog are, although rNgog mDo sde may have been just as important a figure in the mid-12th century as were sGam po pa and Ras chung pa.

A second approach is a socioreligious analysis of the position of the rNgog in the religious field of early second millennium Central Tibet. As mentioned above, rNgog mDo sde was an important figure in the 12th century and he played an active role in the establishment of his tradition as a significant player in that field.[25] We could say, inspired by Max Weber's theories, that mDo sde was a charismatic figure, and that his subsequent lineage is an example of the routinization of charismatic authority.[26] The social world under scrutiny, however, is the religious field of pre-modern Central Tibet. In that social space, religion was highly valued; one could argue that religious leaders commanded a significant power and were often either charismatic leaders or their heir in a process of routinization of charismatic domination. Furthermore, charisma is difficult to prove. It could therefore be argued that such domination was widespread, and that saying that such-and-such was charismatic does not help much in understanding what difference that made. I therefore did not choose this approach, but rather tried to consider the rNgog as agents in a larger social world. Relying on Pierre Bourdieu's theories of field and types of capital that regulate them, I analyze the position of successive members in the rNgog lineage taking into consideration the quantity and the quality of the types of capital they owned.[27] By this analysis, it appears that indeed rNgog mDo sde possessed a lot of the types of capital that could influence his field at the period: he was from a rich family that possessed the economic capital necessary to acquire tantric transmission and build a long-lasting structure able to preserve and transmit them. He inherited from his father

---

[22] See section I.1.3.7 for details.

[23] See sections II.1.1 for Mar pa's biographies (see also Ducher 2017, 54-69) and II.1.2.1. for accounts about Nāropa and his predecessors, the Indian siddhas of the "four currents" (*bka' babs bzhi*).

[24] The two rNgog narratives, called the *Rosaries* in this study, are presented in section 1.3.1.

[25] See section I.3.3.

[26] See Weber 2015, 269-274 and 291-312. An example of a scholar in Tibetan studies who followed this approach is Valentine 2013.

[27] See section I.3.3.

specific teachings that were much prized at the period (yoga and highest yoga tantras).[28] The traditions he inherited were particularly legitimate as they came from acclaimed Indian siddhas and paṇḍitas (especially Nāropa, Maitripa and Śāntibhadra for the highest yoga tantras and Smṛtijñānakīrti for the yoga tantras), thus mDo sde possessed a distinct religious capital that he embodied by receiving it directly from the source, Mar pa, and by gaining a personal and profound knowledge and experience of it. He also possessed concrete spiritual capital, Mar pa's relics as well as several ritual objects inherited from Mar pa and his father. mDo sde had also an active and prolonged professional network, receiving transmissions from many masters among the most powerful of the period (Lo tsā ba), and forming a large number of disciples, thus gaining a substantial social capital. All this contributed to him having some power on his religious field and being able to define it to some extent, so that he contributed to the shaping of the religious world of 12th-century Tibet, like other dominant figures of the period, Ras chung pa and sGam po pa for instance, but also members of other lineages such as Sa chen Kun dga' snying po (1092-1158)[29] or Khyung po rnal 'byor (1050?-1127), and others.[30] His descendants also held a substantial amount of the various types of capital, basically of the same species than just described. Unlike mDo sde who largely managed to shape the field so that it suited the position he was at, however, his heirs continued to occupy the same position but were increasingly shaped by other agents that were defining the field in a way that suited them. They trained in the vehicle of characteristics, for example, and adapted to the rise of monasticism in the Tibetan religious field. By adapting, they were shaped by others and thus occupied a more dominated position in the field.

A further social factor explaining the limited expansion of the rNgog lineage is its hereditary character.[31] rNgog mDo sde and others after him did teach the rNgog traditions to people who were not from their family.[32] Some of them became lineage holders and transmitted e.g. the *Hevajra* or *Catuṣpīṭha* transmissions according to the rNgog Tradition, which was particularly renowned for its efficiency in stimulating results in meditation. They did not, however, *embody* the rNgog traditions the way rNgog family members did, and thus did not initiate branches of the rNgog lineage. The rNgog traditions thus became part of other orders but the rNgog lineage itself continued to be essentially associated to the rNgog kinship lineage until the 15th century. In the end of that century, the social and political changes in Central Tibet, with the increase of sectarian affiliations[33] and the development of lineages of incarnation,[34] for example, were such that the rNgog family could not retain an independent and significant identity any longer. rNgog family members managed to continue the family and religious

---

[28] For a definition of the various classes of tantras see e.g. Isaacson and Sferra 2015; for the importance of yoga tantras in the 12th century, see Weinberger 2010, and for that of highest yoga tantras see e.g. Davidson 2005.

[29] See e.g. Stearns 2001, Davidson 2005.

[30] Kapstein 1980.

[31] See section I.3.1.

[32] Chapter II.3 gives a detailed presentation of the disciples of each rNgog, thus showing how the rNgog traditions spread widely in other lineages. See also e.g. Hou 2017 for the influence of the rNgog tradition in the Tangut Kingdom.

[33] See e.g. Cjaza 2013 for the instable political situation of Central Tibet in the 15th and 16th centuries, and Ary 2015 for the development of the dGe lugs order. See also Fermer 2017.

[34] Tuttle 2017.

lines at a low scale until the early 17th century but their seat was finally taken over by the neighboring Gong dkar chos sde monastery which, for its part, had accumulated such quantity of economic, political, social, and religious types of capital that their symbolic power could rival that of the other growing powers. After that period, the rNgog traditions continued, but the rNgog hereditary lineage ceased.

Finally, a third approach that was consistently followed in the present study is classical religious historiography. Part II of this dissertation is the history of the rNgog pa bka' brgyud religious lineage that takes root in 10th-century India, was acculturated in Tibet through the efforts of Mar pa and spanned the second millennium. It is also the history of the rNgog hereditary lineage, from its mythic origins, to its blossoming in the 12th century and its silent dispersion in the political transformations of 17th-century Central Tibet.

Literature review

As the rNgog lineage played an important role in the religious life of Tibet, it was the subject of some interest, first in Tibet and now in the West. The main sources of information in Tibetan on Chos rdor and his heirs were until recently the *lHo rong chos 'byung*[35] and the *Deb ther sngon po*.[36] Since the latter was translated in English by George Roerich (1902-1960) in association with the Tibetan scholar dGe 'dun chos 'phel (1903-1951) in 1949, most information on any of the rNgog masters found in Western works generally comes from there.[37]

This situation of relative obscurity changed when thousands of texts sealed in 'Bras spungs's gNas bcu lha khang started to be published.[38] First, the *rNgog chos skor phyogs bsgrigs* (henceforth NKCK)—ten volumes of exegesis of the rNgog tradition in photocopy—was published in 2007.[39] It was followed three years later by the publication of two histories of the rNgog family (ST1 and ST2, collectively called *Rosaries*, see below p. 33 for an explanation of this term) in a large collection of historical works, the *Bod kyi lo rgyus rnam thar phyogs bsgrigs* (LGNT).[40] All of this material was finally reproduced in book format with a computerized edition, in a 34-volume *rNgog slob brgyud dang bcas pa'i gsung 'bum* (NKSB).[41]

---

[35] *lHo rong*, 50-65.

[36] *Deb sngon*, 489-499. Many more religious histories later expanded the same topic, for instance the ones composed by gTsug lag phreng ba (1504-1566) or Padma dkar po (1527-1592). For a study of these and others bKa' brgyud historiographical narratives, see Ducher 2017.

[37] *The Blue Annals*, 403-413. It is not possible to list here all secondary sources which relied on the *Blue Annals*. Examples are Smith 2001(1970), 41; Aris 1979, 167, and most of the other secondary sources listed below.

[38] See catalog dPal brtsegs 2004 and section I.1.2.

[39] dPal brtsegs 2007.

[40] dPal brtsegs 2010.

[41] dPal brtsegs 2011. Although the publishing date is 2011, the books were not released until 2012, which was the year when I started the present doctoral research.

A first study of the two historiographical narratives that are at the core of the present dissertation was undertaken by Marco Walther in 2011-2012, in the framework of a MA research under the direction of Franz-Karl Ehrhard at the University of Munich.[42] In this work, Walther edited the two texts published in the LGNT and translated the second one, attributed to rNgog Byang chub dpal. He also provided a thirty-page introduction. This work was summarized with some additional information and presented in English in the proceedings ensuing from the International Seminar of Young Tibetologists (ISYT) that took place in Leipzig in 2015.[43] Walther's work on the rNgog was a pioneering one, and he did it without the help of the computerized collection that makes incomparably easier to access. He was also informed by Ehrhard's encyclopedic knowledge with regards to the history of the Tibetan Empire, of the southern regions of Tibet, and of some of the pivotal figures in the rNgog history, namely Lo chen bSod nams rgya mtsho (1424-1482) and the 4th Zhwa dmar Chos grags ye shes (1453-1524).[44] Its scope was limited, however, by the short time available to Walther, and I therefore feel that the present work, although it benefitted from it, is in no way redundant with it. Furthermore, I disagree with Walther on the authorship and dates of compositions of the two texts, as well as on several minor points.[45]

Walther's work is the most extensive to date on the history of the rNgog lineage. Several other studies deal marginally with the rNgog from various perspectives. One of the scholars who devoted a sustained attention to the rNgog lineage is Dan Martin, who had the kindness to share with me the unpublished family trees he drew based on the *dGe ye History*, the *lHo rong chos 'byung* and the *Deb ther sngon po*. He wrote the biographies of two members of the rNgog family from gZhung (Jo tsul and Kun dga' rdo rje) in the website www.treasuryoflives.com,[46] and his mammoth bibliography, *Tibskrit*, is a major source of bibliographical information on basically everything related to Indo-Tibetan Buddhism, including the rNgog.

Another vast contribution to references on the rNgog is the huge study by Sørensen and Hazod on Bla ma zhang's monastery, entitled *Rulers on the Celestial Plain: Ecclesiastic and*

---

[42] Walther 2012. This was published on the same year that I started my research for the present dissertation, and it was agreed between us that he did not want to continue with his research on the rNgog and that I could therefore proceed with this topic.

[43] Walther 2016.

[44] Ehrhard 2002a, Ehrhard 2002b, Ehrhard 2004, Ehrhard 2010.

[45] In short, Walther believes that ST1, attributed to bSod nams dpal, was based on ST2, attributed to rNgog Byang chub dpal. I believe the reverse applies, and that ST1 was composed around 1360 by dPal gyi rdo rje, copied at a later date by the scribe bSod nams dpal, and enlarged by rNgog Byang chub dpal (see I.1.3.1. for details). Unlike what Walther states (Walther 2016, 516.), I do not find the spelling in the two texts especially riddled with mistakes. It is actually rather straightforward, if one excepts a few old spellings and the part on the Empire, which is particularly difficult to make sense for someone not specialized in that period. My debt to Walther's research will be acknowledge in due place in the rest of this work.

[46] http://treasuryoflives.org/biographies/view/Ngok-Jo-Tsultrim-Sherab/P3AG59 (accessed 2017/02/10) and http://treasuryoflives.org/biographies/view/Ngok-Kunga-Dorje/P8729 (accessed on the same day). A forthcoming project of mine is to complete the collection of rNgog biographies on the website with those of all religiously relevant rNgog masters.

Secular Hegemony in Medieval Tibet, a Study of Tshal Gung-thang.[47] One finds in it many references to various rNgog members and their tradition as well as to the rNgog's seat, sPre'u zhing. This very richly-annotated translation of the inventory of Tshal Gung thang contains information on basically anything related to the premodern history of Central Tibet, especially with regards to important families and monasteries.

Several other works provide brief mentions of the rNgog lineage from the viewpoints of the lives of family members, of the geography of their seat, of the religious tradition itself, and of iconography. As far as biographical information is concerned, a major source of primary information concerning rNgog Chos rdor are the biographies of Mar pa and Mi la ras pa composed by gTsang smyon He ru ka (1452-1507) in 1505 and 1488. One finds in them somewhat enlarged descriptions of Chos rdor's guidance of Mi la ras pa when the latter escaped from Mar pa.[48] gTsang smyon's description was based on his own stay in the rNgog seat in the 1480s, when he stayed for several months in retreat in the Mi la ras pa cave there, when late members of the rNgog family were present.[49] The translated versions of these works informed many remarks on rNgog Chos rdor found in the secondary literature.

Several sources state that rNgog Chos rdor may have founded Glang mo gling Monastery, situated in the Bum thang region of Bhutan.[50] This information was first provided by Michael Aris in his work on the history of Bhutan. It is based on a late Bhutanese account, although Aris acknowledges that he did not go to the place himself as he was told the temple dated from the 17th century.[51] As this information is not backed by any of the rNgog accounts, I think it may refer to a rNgog from another branch, or to another master altogether.

A growing body of literature about the people who interacted with the rNgog is available. Remarks about rNgog mDo sde being a childhood teacher of Bla ma Zhang (1123-1193) can be found in Sørensen and Hazod's study of Tshal Gung thang and in Carl Yamamoto's study of Bla ma zhang, but it is doubtful that Zhang's master, sometimes called rNgog sTod lung pa, was in fact rNgog mDo sde.[52] Ralf Kramer's book on rNgog Blo ldan shes rab is an important source of knowledge for the gSang phu scholar who was a distant cousin of rNgog Chos rdor.[53] Franz-Karl Ehrhard published the letters and life-story of Lo chen bSod nams rgya mtsho, with a summary of both his life and that of the 4th Zhwa dmar Chos grags ye shes some information on this disciple of rNgog Byang chub dpal, and his own disciple.[54] Mathes

---

[47] Sørensen 2007.

[48] The life of Mar pa was translated in English by the Nalanda Translation Committee in Tsangnyön 1982. The life of Mi la ras pa was translated in Lhalungpa 1977 and Tsangnyön 2010.

[49] See section II.5.2.1.

[50] Dargyey 2001, 58; Karma Phuntsho 2013, 137.

[51] Aris 1979, 167. The source is the *dPal ldan 'brug pa'i gdul zhing lho phyogs nags mo'i ljongs kyi chos 'byung blo gsar rna ba'i rgyan* (f. 181.5–182.3) composed by dGe 'dun rin chen (1926–1997) in 1972.

[52] Sørensen 2007, 77, n. 19, etc. and Yamamoto 2012.

[53] Kramer 2007.

[54] Ehrhard 2002a and 2002b.

provides a short biography of ’Gos Lo tsā ba in his study about ’Gos Lo’s commentary, and thus references to the education he received from Byanch chub dpal.[55]

The most frequent mentions of the rNgog happen with regards to their seat in the gZhung valley. As it housed Mar pa’s relics, sPre’u zhing remained a center of pilgrimage even after the rNgog ceased to play any significant role there. A pilgrim who visited the gZhung valley was bSod nams dbang phyug (1660-1731); his biography is translated by David Snellgrove.[56] ’Jam dbyangs mkhyen brtse dbang po (1820-1892) travelled there in the 1840s, and was followed in 1918-1920 by Kaḥ thog Si tu Chos kyi rgya mtsho (1880-1925);[57] their pilgrimage guides provide a description of the place before the destructions of the Cultural Revolution. The former was translated in English by Alfonsa Ferrari,[58] and retranslated with considerable background information by Matthew Akester.[59] Akester made use of most Tibetan sources available as well as stories by local informants.

Another important source on the late history of the rNgog seat are biographies of the masters from Gong dkar chos sde, who were granted sPre’u zhing in the 17th century. Mathias Fermer did his MA thesis on the monastery’s founder, Gong dkar Kun dga’ rnam rgyal (1432-1496), a student of rNgog Byang chub dpal, and continues a doctoral research on the formation and influence of Sa skya monastic communities in the region of Southern Central Tibet where gZhung is situated from the middle of the 14th to the late 15th century.[60] He wrote an article on the regional ruling Yar rgyab family, describing the regions under their rule, including gZhung in the 15th century.[61] Fermer spent some time in the region with local informants, and his work is therefore very useful to ascertain the geography of the gZhung valley.

The rNgog spiritual tradition itself has not been studied in a systematic way so far, nor has the *bKa’ brgyud sngags mdzod*, which contains most of their tantric traditions. One finds occasional remarks on the history and characteristics of the rNgog lineage and its teachings in some of Kong sprul’s other works, especially in the *Treasury of Knowledge* (*Shes bya mdzod*), now completely available in English,[62] and the *Treasury of Instructions* (*gDams ngag mdzod*), which is in the process of being translated.[63] Jan-Ulrich Sobisch provided precious information on the Sa skya and rNgog’s traditions of the *Hevajratantra* based on the writings of the Tibetan scholar A mes zhabs Kun dga’ bsod nams (1597-1659).[64] In recent years, the

---

[55] Mathes 2007.

[56] Snellgrove 1967.

[57] Everding 2011.

[58] Ferrari 1958.

[59] Akester 2016, 264-267.

[60] Fermer 2009 for the MA dissertation. He hopes to conclude the doctoral dissertation in 2018.

[61] Fermer 2017. References to page numbers in this article is only provisional. Heartfelt thanks are due to Mathias for generally sharing much information and texts with me.

[62] Kontrül & Barron 2003; Kongtrül, Guarisco & McLeod 2005; Kongtrül & Harding 2007; Kongtrül Guarisco & McLeod 2008.

[63] See the Tsadra project main page : http://dnz.tsadra.org/index.php/Main_Page (accessed on 2017/02/12). Also Kongtrül & Barron 2013 and Kapstein 1995 and 2007.

[64] Sobisch 2008.

study of the Tangut Kingdom has soared, and several transmissions related to the rNgog tradition have been discovered.[65] It is a field that is likely to bring much novelty in the future.

Lastly, several paintings of transmissions associated with the rNgog tradition have been published. Some representations in private collections in the United-States are described by David Jackson.[66] The painting of Dud sol ma that opens the present dissertation is from the collection of Alain Bordier Collection and was described by Ulrich von Schroeder.[67] Regarding the maṇḍalas included in the KGND, several works with reproduction and schemas are available, and the figures related with rNgog appeared. In these presentations, there does not seem to be much background information other than that found in the *Blue Annals*.

Outline

This dissertation is composed of two main parts. Part I, "Orientations," is made up of three chapters. It provides the framework of the detailed historiography that follows and the data analysis that helped me anwer some of the queries outlined above. Part II, "A Lineage in Time," is the historiography of the rNgog lineage. It comprises five chapters that retrace the life of each of the Mar rngog bka' brgyud lineage members, from Mar pa's Indian masters, to Mar pa and his four main disciples, until the last known generations of the rNgog hereditary lineage.

In Chapter I.1 the Tibetan sources used to construct the Mar rngog bka' brgyud history are presented. The chapter opens with an explanation of the methodology adopted to approach the sources, especially historiographical texts of various genres. It is followed by a description of the origin of many of the rNgog texts used for this research, namely the library of the gNas bcu Temple in 'Bras spungs Monastery, where several thousands of volumes were lying in secret since their seizure in the mid-17th century. Then, all the texts are presented, first historiographies and second tantric materials conserved in two large collections that house rNgog texts, as well as in other collections that marginally contain rNgog material. The first collection presented is the *Compilation of rNgog Cycles* (*rngog chos skor phyogs bsgrigs*, NKCK). The second is the *Treasury of bKa' brgyud Mantras* (*bKa' brgyud sngags mdzod*, KGND), a six-volume collection compiled by Kong sprul. This collection remains until today the tantric heart of the bKa' brgyud order, and the empowerments it contains are regularly transmitted by hierarchs of the various bKa' brgyud orders.

The seven maṇḍalas of the rNgog are presented in chapter I.2. They are tantric cycles associated with several tantras (*Hevajra*, *Catuṣpīṭha*, *Mahāmāyā*, and *Mañjuśrīnāmasaṃgīti*), together with the related techniques of merging and transference (*bsre 'pho*) and the protective deity Dud sol ma. In each case, I describe the Indian authors and texts that define the specific tradition held by the rNgog, and assess each lineage as it is described in commentaries, records or teachings received, initiation texts, etc. In this part as in others, I

[65] Solonin 2015 for a general presentation and Hou 2017 for references to the rNgog.

[66] Jackson 2009, 74-75, 78; Jackson and Fermer 2016, 306-309

[67] von Schroeder 2009; Béguin 2013.

refrain from any assessment or description of the content of these traditions, which would necessitate another approach altogether and could be the subject of another dissertation. Schemas of the seven main maṇḍalas are provided in order to give the reader a general idea of the kind of religious practice we are talking about, as sometimes a picture is better than a thousand words.

Chapter I.3 is a theoretical analysis of the concept of lineage, central in Tibet's religious landscape. Having defined the term *brgyud pa*, I examine how the spiritual and familial perspectives of the term are fused in the two rNgog accounts, and how Mar pa's legacy, represented by his tantric transmissions and his relics, were used by the rNgog to obtain legitimacy in a competitive religious field. In the final part of this chapter, I rely on the sociological concept of types of capital proposed by Pierre Bourdieu in order to probe the central question that lies behind the present research, that of the factors leading to success or the lack thereof.

Part II is a study of the rNgog lineage, beginning with its Indian and Tibetan, often mythical, origins and spanning the second millennium. Here, all the names and events described in available primary sources as well as studies and data retrieved from secondary sources are combined in order to write the history of this lineage, which was relatively little known until now. Diagrams of Mar pa's and the rNgog's genealogies accompany the relevant chapters.

Chapter II.1 is a study of the rNgog's religious ancestors, chiefly Mar pa and his Indian masters. As the common forefathers of all bKa' brgyud lineages, their life is the object of centuries of life writing and it is impossible to firmly establish what it may have been like. The aim of this chapter, therefore, is to gather all relevant data in order to assess what biographical traditions exist, and in the case of Mar pa and Nāropa, to describe their life-story on the basis of the accounts found in the rNgog tradition. The chapter ends with a description of the life and lineage of Mar pa's other disciples, especially mTshur ston, Mes ston and Mar pa mgo yag.

Chapter II.2 parallels II.1 as a study of the rNgog's bone ancestors. The two rNgog accounts each contain a two-and-a-half-folio genealogy tracing the rNgog's ancestry to the mythic period of the king lHa tho tho ri (4/5th century). They describe twenty generations of individuals with an often generic past, whose history seems largely derived from accounts of the Tibetan Empire. Although a comprehensive study of the sources and significations of these accounts is beyond the framework of this study dedicated to the rNgog religious lineage, contextualisation and references are provided. The second part of the chapter distinguishes the various individuals known by the name rNgog who lived in the 11th to 13th centuries, most notably rNgog Blo ldan shes rab (1059-1109) and rNgog/rDog Āryadeva (12th c.).

Chapter II.3, the longest of the dissertation, is a detailed account of the life-story of rNgog Chos rdor (1023-1090) and his son rNgog mDo sde, followed by that of the masters of the lines coming from mDo sde's (1078-1154) two sons, the gTsang tsha and rGyal tsha branches. As the two histories—which are the unifying thread of this chapter—only provide details on individuals who played a religious role, this family narrative resembles that of any religious lineage. I nonetheless try whenever possible to deduce from them concrete aspects

of family descent. Details on the masters and disciples of each rNgog master is provided so as to understand their wider network, and special efforts are made to understand the political scene in which each of them was evolving.

This is particularly true for chapter II.4 that describes the life of rNgog Byang chub dpal (1360-1446). The last important lama of the rNgog family lived in a time of intense political and religious activity in Central Tibet. He taught powerful scholars such as ’Gos Lo tsā ba (1392-1481, the author of the famous *Deb ther sngon po*), founders of monastery, and even the ruler of the Phag mo gru pa Dynasty. The 15th century, however, marked a turn in Tibet’s history, and the rNgog, like many other family lineages, started to decline. Byang chub dpal’s most significant disciples were not his sons, but monks who disseminated the rNgog traditions in their own lineage. The end of the chapter describes these individuals who inherited and transmitted the rNgog transmissions, until Kong sprul (1813-1899), who joined the loosening threads in the *bKa’ brgyud sngags mdzod*.

The final chapter II.5 describes the decline of the rNgog family in the 16th century and the history of the main seat, sPre’u zhing, after that time. It concludes with a geographical description of the gZhung valley today, based on textual accounts as well as fieldwork.

Five appendices conclude the work: first is a collated edition of the two rNgog histories, based on ST1 and with indication of the variants of ST2. Appendix 2 is a translation of this collated text, which is also present throughout the dissertation in the form of excerpts illustrating each of the relevant sections. Appendix 3 is a chart referencing all members of the rNgog family, with their alternative names, titles, dates of birth and age at death, etc. Appendix 4 is an index of titles contained in the *rNgog slob brgyud dang bcas pa’i gsung ’bum* (NKSB, the computerized and augmented reedition of NKCK) with correspondences to other collections, especially the *rNgog chos skor phyogs bsgrigs*, the *’Bri gung bka’ brgyud chos mdzod chen mo* and the *bKa’ brgyud sngags mdzod*. Appendix 5 is a detailed table of content of the *bKa’ brgyud sngags mdzod*.

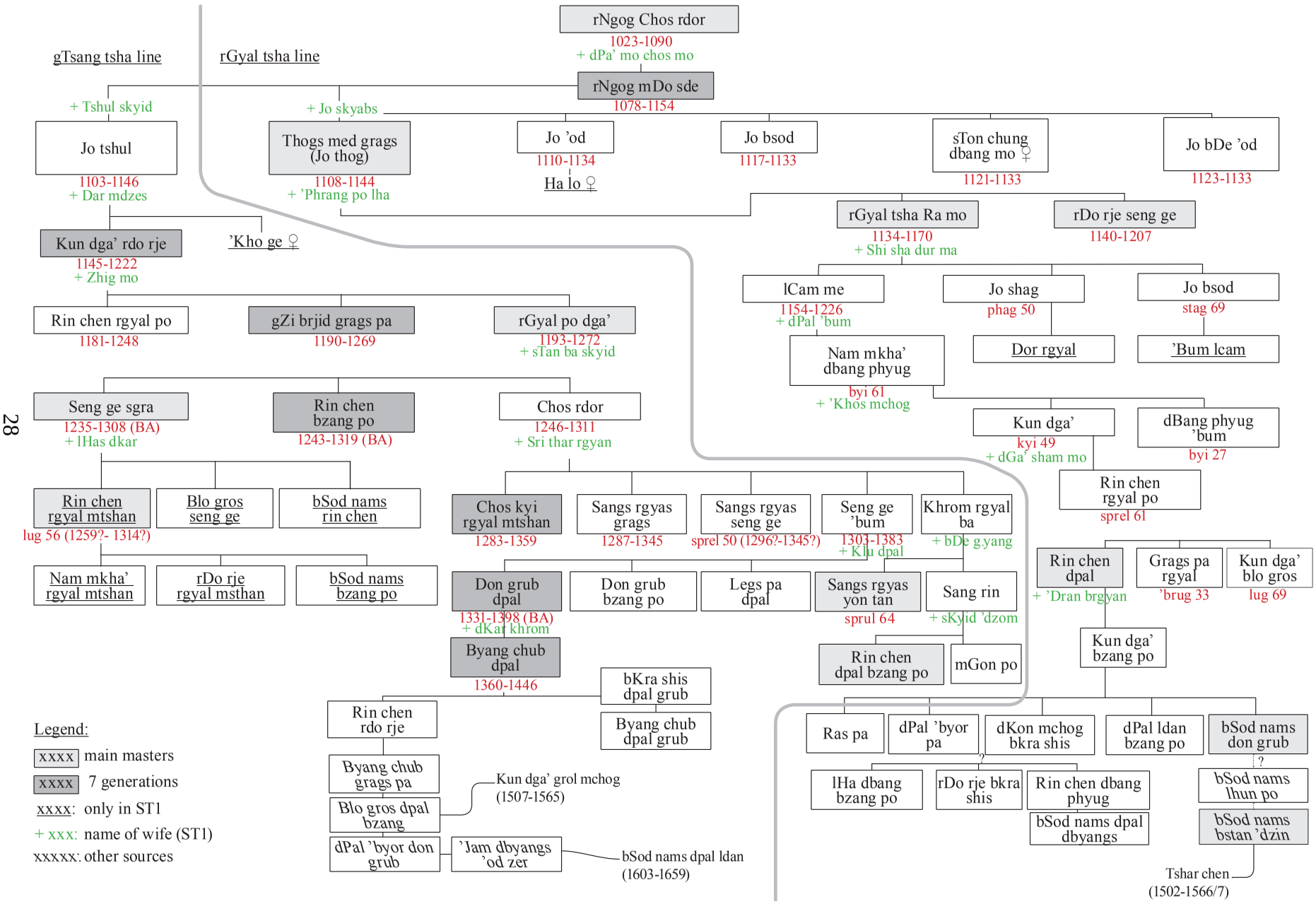
gTsang tsha line
rGyal tsha line
rNgog Chos rdor
1023-1090
+ dPa' mo chos mo
rNgog mDo sde
1078-1154
+ Tshul skyid
+ Jo skyabs
Jo tshul
1103-1146
+ Dar mdzes
Thogs med grags (Jo thog)
1108-1144
+ 'Phrang po lha
Jo 'od
1110-1134
Ha lo ♀
Jo bsod
1117-1133
sTon chung dbang mo ♀
1121-1133
Jo bDe 'od
1123-1133
Kun dga' rdo rje
1145-1222
+ Zhig mo
'Kho ge ♀
rGyal tsha Ra mo
1134-1170
+ Shi sha dur ma
rDo rje seng ge
1140-1207
Rin chen rgyal po
1181-1248
gZi brjid grags pa
1190-1269
rGyal po dga'
1193-1272
+ sTan ba skyid
lCam me
1154-1226
+ dPal 'bum
Jo shag
phag 50
Jo bsod
stag 69
Nam mkha' dbang phyug
byi 61
+ 'Khos mchog
Dor rgyal
'Bum lcam
Seng ge sgra
1235-1308 (BA)
+ lHas dkar
Rin chen bzang po
1243-1319 (BA)
Chos rdor
1246-1311
+ Sri thar rgyan
Kun dga'
kyi 49
+ dGa' sham mo
dBang phyug 'bum
byi 27
Rin chen rgyal po
sprel 61
Rin chen rgyal mtshan
lug 56 (1259?- 1314?)
Blo gros seng ge
bSod nams rin chen
Chos kyi rgyal mtshan
1283-1359
Sangs rgyas grags
1287-1345
Sangs rgyas seng ge
sprel 50 (1296?-1345?)
Seng ge 'bum
1303-1383
+ Klu dpal
Khrom rgyal ba
+ bDe g.yang
Rin chen dpal
+ 'Dran brgyan
Grags pa rgyal
'brug 33
Kun dga' blo gros
lug 69
Nam mkha' rgyal mtshan
rDo rje rgyal msthan
bSod nams bzang po
Don grub dpal
1331-1398 (BA)
+ dKar khrom
Don grub bzang po
Legs pa dpal
Sangs rgyas yon tan
sprul 64
Sang rin
+ sKyid 'dzom
Kun dga' bzang po
Byang chub dpal
1360-1446
Rin chen dpal bzang po
mGon po
bKra shis dpal grub
Byang chub dpal grub
Rin chen rdo rje
Byang chub grags pa
Blo gros dpal bzang
Kun dga' grol mchog
(1507-1565)
dPal 'byor don grub
'Jam dbyangs 'od zer
bSod nams dpal ldan
(1603-1659)
Ras pa
dPal 'byor pa
dKon mchog bkra shis
dPal ldan bzang po
bSod nams don grub
lHa dbang bzang po
rDo rje bkra shis
Rin chen dbang phyug
bSod nams dpal dbyangs
bSod nams lhun po
bSod nams bstan 'dzin
Tshar chen
(1502-1566/7)
Legend:
xxxx main masters
xxxx 7 generations
xxxx: only in ST1
+ xxx: name of wife (ST1)
xxxxx: other sources

(Previous page)

Plate 2: genealogical tree of the gTsang tsha and rGyal tsha lines of the rNgog hereditary lineage, from ST1, ST2, ST3, *Kun dga' grol mchog rnam thar*, *mGon po bSod nams dpal ldan rnam thar* and *Tshar chen rnam thar*.

PART ONE: Orientations

CHAPTER ONE: Sources

The goal of this dissertation is to improve our understanding of the rNgog pa bka' brgyud lineage, both its lineages of transmission and the tradition's broader religious legacy. To reach this understanding, the material used is predominantly textual, although the texts at my disposal are drawn from different genres. As with most subjects in Tibetan religious studies, we know of the rNgog because of what has been written about them, and through the texts they or people related to them composed, but not through documents such as birth registers, population censuses, or civil contracts. Even their social status as nobles is unclear. Although they are depicted as being amongst the religious and social elite of Central Tibet, the social conditions in which they lived, the identity of the peasants who plowed their fields and paid them taxes, or the pilgrims who may have flocked to their temples and enriched them with donations are, for the most part, unknown. Available sources are largely limited to the religious aspects of social life in gZhung and the practical material aspects of that religiosity are only alluded to. In chapter one, I first offer a discussion of the methodology adopted in treating my textual materials, especially biographical. This is followed by a discussion of the origin, composition and, to some extent, content of these sources.

1.1. Methodology and treatment of sources

In this dissertation, I use three kinds of sources, which may be called "biographical," "historical," and "religious." Hagiography and historiography are not very different in a pre-modern Tibetan context, and the third category, religious texts, such as tantric commentaries and rituals, also contain some historical and biographical material. It is therefore important to first try and distinguish between these genres, and ponder how they can inform our knowledge of Tibet's religious history.

1.1.1. Biography, hagiography, rosary, religious history, and record of teachings received

Although many texts can be examined in order to understand the history of the rNgog, they are largely derived from two texts, called "rosaries," and especially from the earlier one (ST1), which is the source of the second (ST2).[68] The first lines of ST1 read as follows:[69]

---

[68] The texts themselves are presented in section I.1.3.1.

[69] ST1, 2: *bla ma rngog pa yab sras rim par byon pa'i* ***rnam thar*** *rin po che'i rgyan gyi* ***phreng ba*** *bzhugs pa yin no// bka' brgyud kyi bla ma rnams la phyag 'tshal lo rje btsun dpal ldan rngog pa yi/ mi rgyud chos rgyud rim pa dang/ chos kyi zhus tshul btsaṁs tshul sogs/* ***lo rgyus*** *zur tsam bri bar bya/* ST2, 26 reads the same with *gdung rgyud* instead of *mi brgyud.* In further quotes of ST1, the reader may refer directly to the the Tibetan version in Appendix 1.

Rosary *of Precious Ornaments –* ***Hagiographies*** *of the Successive rNgog pa Masters, Fathers and Sons*
I pay homage to the bKa' brgyud masters!
I will write briefly the **story**
Of the venerable and glorious rNgog pas:
Their successive human and religious lines
And the way they received and composed teachings, among other things.

What is the meaning, here and more broadly, of the words "hagiography" (*rnam thar*), "rosary" *(phreng ba*), "history" (*lo rgyus*), and "religious history" (*chos 'byung*)—although the latter is not used in the quote? In order to address this question, I will begin by briefly discussing the terms "biography" and "hagiography" in Western literature, and then compare these with various forms of historiography in a Tibetan framework. This topic was already the subject of considerable attention.[70] What follows should therefore be understood as the framing of the documents contained in this work rather than a systematic study of any of these genres.

Biography and hagiography as a source for historical studies

According to François Dosse,[71] author of *Le pari biographique* and specialist of French intellectual history, until the modern period, biography had essentially a function of identification. It was a discourse of virtue, transmitting values—heroic during the Antiquity and religious during the Christian era—to future generations. In the late 18th century, there was a shift in the regime of historicity: the modern man and historian, instead of turning towards the past in order to learn from the experience of others and prepare the future, shifted towards "progress," a future envisioned as completely different from tradition. With the development of sociology in the early 20th century, social scientists (the sociologist Simiand, followed by the historians of the *Annales*, and many others) rejected the old idols: chronology, politics, and biography. Structuralism and post-modernism further relegated the individual in the background, and biography was in general considered a minor genre for amateurs, not one fit for historiography. In the mid-80s, however, there was a renewed interest in "actors;" great paradigms lost their structuring power and biography regained favour, with a shift of interest towards singularity, small people, and day-to-day life.

Hagiography is a specific kind of biography, the biography of a saint, which "intends primarily to engender, propagate, strengthen, etc. the cult of a saint."[72] The reception of

---

[70] For instance, Gyatso 1998 and Quintman 2014. I analyze the question in more depth in Ducher 2017, 23-38, and consider the present essay as an expansion of that.

[71] Dosse 2005 (not translated). This is an intellectual history of the biographical genre. Dosse is a specialist of several French intellectuals such as Ricoeur, Certeau, Deleuze, etc. The view summarized here is expressed at the beginning of chapters two "The Heroic Age," three "The Modal Biography" and four "The Hermeneutic Age," as well as in the conclusion and in his short article, "Biographies, prosopographie" (Dosse 2010).

[72] Delehaye 1906, xiii and 2. Quoted by Lifshitz 1994, 96. See Ducher 2017, 27-32 for a more detailed study of the question of hagiography. Hippolyte Delehaye (1859-1941) was a Belgian Jesuit.

"hagiography" in Tibetology, Buddhology and, more largely, Western historiography follows to some extent the same lines as that of biography, with until three decades ago an even stronger rejection because of its association with religion and its emphasis on being a model of virtue. Until then, in Tibetan and Buddhist Studies, the life stories of saints were seen as unsatisfying but unavoidable sources of data mining,[73] as indeed there is little else to rely on in order to understand Tibet's premodern history. After having rejected them, however, scholars adopted a more conciliatory approach, one that does not aim at historical objectivity but tries to understand how each text represents a specific period and milieu. As Guy Philippart notes in his introduction to the *Histoire internationale de la littérature hagiographique latine et vernaculaire en Occident des origines à 1550*, it is not the personas of the saints, the world in which they lived, or the cults that developed around their memory that are at the center of the study of hagiographic traditions, but the texts, their narratives, their internal dynamics, as well as the hagiographers themselves.[74] My study of Mar pa's biographies illustrates this approach. In Chapter Two of that work, I offer a study of the saint's hagiographical tradition, which is composed of more than thirty hagiographies and, in particular, I problematize the process of biographical construction, seeing each text as an object of investigation rather than as a mere source of historical information.[75]

Hagiography has been reimagined because, in large part, the subject matter was no longer approached entirely in terms of historical vericity (e.g. whether the narrative was "true" vs. "false"). As expressed by Michel de Certeau, it is vain to consider hagiography from the angle of historical truth because it has a practical efficiency and should be taken as social documents that represent a religious community:[76]

> Il est impossible […] de ne considérer [l'hagiographie] qu'en fonction de l'« authenticité » ou de la « valeur historique » : ce serait soumettre un genre littéraire à la loi d'un autre – l'historiographie – et démanteler un type *propre* de discours pour n'en retenir que ce qu'il n'est pas. […] La combinaison des actes, des lieux et des thèmes indique une structure propre qui se réfère non pas essentiellement à « ce qui s'est passé », comme le fait l'histoire, mais à « ce qui est exemplaire ».

Hence, if we are to follow this lead, biography is not a genre to be discarded because actors can tell us a great deal about society in general. Similarly, hagiography, especially in a religious world such as Tibet, can inform our knowledge of the networks and social forces that shaped its cultural history. It is with this in mind that I approach the texts which discuss the rNgog. I do this with two goals: first, the rNgog history itself is largely unknown, and a

---

[73] A famous remark exemplifying that positivist approach to biography is that of Tucci in *Tibetan Painted Scrolls* (Tucci 1949, 151): "[…] an historian cannot ignore the *rnam t'ar*. He must resign himself to read them, and go through hundreds of pages to find a point of reference, an allusion, an important piece of information; he must be resigned […] because with the exception of a few lives, noble masterpieces breathing a fresh, serene and robust poetic spirit, as for instance, Milarepa's, these *Legenda aurea* are mostly cast in the same mould […]"

[74] Philippart 1994, 9, quoted in Rondolino 2015, 165.

[75] Ducher 2017. See also Quintman 2014 who did a similar study for Mi la ras pa's lifestories that culminated in the masterpiece of Tibetan hagiography, Mi la ras pa's biography by gTsang smyon.

[76] Certeau 2011, 317. See the remarks of Dosse 2005, 150-151, on the subject.

special effort must be made to assemble the various sources dealing with the subject. Second, the rNgog, like Mar pa and his other disciples Mes ston and mTshur ston, were representative of a kind of network widespread in the first half of the second millennium, the family lineage. They were religious specialists who handed down their religious capital within their families. By studying their hagiographies and extracting from them the details that point to daily life in Tibet, it might be possible, at a larger scale and with other such case-studies, to understand more finely how this model worked, and how it evolved over time. Chapter I.3 offers such an analysis of rNgog biographies as social documents. Part II examines in more detail the various phases of the rNgog pa lineage by bringing together all data available, and reconstructing some of the important aspects of their lives (ancestors, family lines, monasteries, masters, disciples, etc.).

"Rosary"

Further on, Certeau underlines the fact that the life of a saint is inscribed in the life of a community. He distinguishes two movements in hagiography, which seem to be contrary but that complement one another. On the one hand, an existing community sets a distance with its origins by creating a representation of it. On the other hand, that representation is like a return to the origins that reconstitutes a unity at a time when there is a risk of dispersion because of the spread of the community. Thus, memory (an object whose construction is linked to the disappearing of beginnings) combines with the creation of an image intended to protect the group against its dispersion.[77]

This understanding of hagiography as a representation uniting a community in a common memory of its past is particularly useful when defining the term "rosary," which is not a literary genre *per se* but refer to specific kinds of hagiographical writing in Tibet. The Tibetan word used is *phreng ba*, which more literally refers to a series, or a succession of things, and is derived from the verb *'brang*, "to follow one another."[78] For example, a *yig phreng* is a line of writing, made up of many letters (*yi ge*) and a *sku phreng* is a series of incarnations of the same master through time. The word *phreng ba* is generally understood as a rosary (a *mala*), that is to say a series of ornaments (pearls made up of precious stones or gold) strung on a thread. The image, in a hagiographical framework, is that of a series of lifestories of the successive saints of a lineage, and when I use this word in the present study, it should be understood to refer to "a series of hagiographies." In this series, there is a continuous thread (the blessing of the lineage's transmission) which links otherwise loose pearls (the saints), thus forming a rosary (a lineage). At one point in history, one of the disciples of the tradition records a series of life-stories of the saints who transmitted a specific teaching from its origin

---

[77] Certeau 2011, 320-321: "La vie de saint s'inscrit dans la vie d'un groupe, Église ou communauté. Elle suppose que le groupe a déjà une existence. […] la « vie de saint » articule deux mouvements apparemment contraires. Elle assure une distance par rapport aux origines (une communauté déjà constituée se distingue de son passé grâce à l'écart que constitue la représentation de ce passé). Mais par ailleurs un retour aux origines permet de reconstituer une unité au moment où, en se développant, le groupe risque de se disperser. Ainsi, le souvenir (objet dont la construction est liée à la disparition des commencements) se combine à l'« édification » productrice d'une image destinée à protéger le groupe contre sa dispersion."

[78] *Bod rgya tshig mdzod chen mo*, 2: 1987: *rjes su 'gro ba dang/ snyeg pa'am/ 'jug pa.*

until his own time and that of his co-disciples. When doing that, he creates a distance with their past: indeed, just like hagiographies of a single individual are generally composed after that individual's death, rosaries of lives only include the life-stories of past masters, generally up to the author's own master when he is dead. The *Rosaries* follow that trend, although the names of living family heirs are mentioned in passing. That distance with past members of the lineage unites present members in a common memory, in a common representation of who they are, what they do, and what differentiates them from other communities.

In the history of Tibetan literature, the expression "golden rosary" (*gser phreng*) is used frequently for collective biographies, and we could perhaps draw a parallel with the *Golden Legend*, a collection of life-stories of Christian saints written in the 13th c. by Jacobus de Voragine (ca. 1229-1298), where the word "legend" does not refer to something that is untrue, but something that is "to be read" during masses or by individuals.[79] Just as the *Legenda aurea* is said to be golden because it is precious like gold, golden rosaries are collections of precious lives. Although the word "golden rosary" is often used, a rosary is not necessarily "golden;" it can be of various precious materials, gold, but also lapis, ruby, crystal, etc. The most famous "golden rosary" is the transmission of mahāmudrā within the Karma bka' brgyud lineage. In that case, the term can refer to compilations of biographies of the Karma bka' brgyud lineage, but also to the concrete succession of saints who transmitted and realized a specific teaching, mahāmudrā, hence, a "golden rosary" is not necessarily written. Furthermore, the term is not restricted to the bKa' brgyud lineages, as is generally perceived. One finds writings with this title in all lineages, for instance rNying ma[80] and bKa' gdams (the *sNar thang gser phreng*), carrying the idea of a sequence of episodes, or a sequence of life-stories. Thus, the term "rosary," and more specifically "golden rosary," although it became more specifically associated with the bKa' brgyud lineages,[81] has a wide range of uses. It nonetheless generally means that there is a series of life-stories, hence that it is a diachronic account.

---

[79] Dosse 2005, 153-156. François Dosse says that "*A priori*, la légende s'oppose radicalement à l'histoire, mais l'étymologie du terme légende rapproche des deux domaines puisque le légendaire renvoie à « ce qui est à lire »." See Boureau 1984.

[80] A treasure biography of Padmasambhava revealed by Sangs rgyas gling pa in the late 1300s is called the *bKa' thang gser phreng* (see Doney 2016). It tells the stories of Padamasambhava and masters such as Vairocana, Nam mkha'i snying po, Vimalamitra and Śāntarakṣita, but these narratives (also found in the *Padma bka' thang*) are expanded versions of the *Zangs gling ma* accounts, and do not form a lineage such that they could be likened to beads of gold on a rosary, like in the other cases. They are more like the sparks drawn in and emanated by the "lightning rod' Padmasambhava (see Germano 2002). Thanks to Lewis Doney for the references.

[81] Smith 2001, 39: "Probably intended to explain a *bla brgyud gsol 'debs*, the reverential petition to the successive gurus in a transmission lineage of an esoteric teaching, such collections of hagiographic writing often enshrine some of the most cherished instructions (*man ngag*) of a tradition. These *gser 'phreng*, like biographies of individual lamas, can also serve as some of our most reliable sources of historical data. It is probable that the *gser 'phreng* originated among the 'Brug pa and Stag lung traditions within which *bla mchod* (*gurupuja*) and *rnam thar* reached their highest degree of elaboration as liturgical and contemplative practices." As demonstrated by the circumstantiated phrasing of Gene Smith, the genre of rosary deserves a more thorough study.

“Diachronic” has a parallel in the word “synchronic.” These are linguistic terms developed by Ferdinand de Saussure in the early 20th c. A diachronic study considers the history of something (generally a language), the way it developed in time, vertically. A synchronic approach, on the contrary, considers its present complexity, horizontally, without consideration for its history. In general, biographies and hagiographies consider the life of one individual synchronically, by taking into account the events of his life as unfolding in space, in relation to his contemporary masters and disciples, and they have a stronger emphasis on edification. One could argue that rosaries, for their part, study a lineage through time, and focus more strongly on the history of the lineage. An individual is seen as a link in a chain of saints who received and transmitted a given teaching. He is valued not for himself but as an element of a whole which unfolds in time. In this sense, the rNgog *Rosaries* thus deal with the history of a series of individuals who followed each other in time and are considered restrospectively, thus have a more diachronic perspective.

Rosaries in general are religious works, that is to say that they describe the successive lives of religious masters and disciples. The *Rosaries* for their part relate both the human and the religious lines of rNgog pa masters (*mi rgyud chos rgyud*), hence are in some way akin to the genre of *gdung rabs*, “genealogy,” that relate more specically the life-stories of individuals of the same family. Because of the close connection between religion and family in Central Tibet at the period we are interested in (11th-15th c), the two often coincide, which is the case in the *Rosaries* that relate both the religious ancestry of the rNgog (Mar pa, his family and his religious masters) and their own family ancestry. This is in no way limited to the rNgog, as many other families were also religious lineages,[82] but as will be argued later, it may be significant that the rNgog accounts are called rosaries and not genealogies. With regards to the way hagiography uses the glorious ancestry of an individual, Jonathan Samuels states:[83]

> Authors through the ages seldom neglected the opportunity to advertise a subject’s eminent ancestry. Whether or not the information provided is of a genealogical nature (describing specific lineages or lines of succession), the overwhelming sense is that the discussion of ancestry is there to support the notion that the protagonist’s path to greatness was predetermined. Significant forebears were not necessarily religious figures. Descent from those of high status and “worldly” achievement (political or even military) were treated by many as guarantors of eventual spiritual preeminence.

With regards to the distinction between diachronic and synchronic, one can wonder whether there is a significant difference between “rosary” (that is to say “successive hagiography”) and “hagiography,” understood as the biography of a single saint. To answer this question, one must first take into account that there are several types of “rosaries.” Some rosaries can be made up of several distinct hagiographies. In that case, the style of the two is not so different although there can be a difference in length. In the case of Mar pa’s life-stories for instance,[84]

---

[82] See for instance the *Sa skya gdung rabs* that relates the history of the Sa skya lineage and the ’Khon family.

[83] Samuels 2016, 300-301.

[84] Ducher 2017, 24-26. See *Ibid*., 24, n. 25 for references about these genres of historical writing, especially van der Kuijp 1996, 42–47.

many hagiographies become parts of longer collections compiled by one or several authors and that are eventually called "rosaries" although they may not have been called so in the beginning. Some hagiographies are authored as free-standing texts and are circulated on their own, or together with others thus creating a giant rosary (a case in point is that of Mar pa's biography by gTsang smyon, which together with the other biographies of the early bKa' brgyud saints authored by gTsang smyon's school formed a large rosary which became a classic of religious reading).[85] In the case of free-standing texts, the biographies are generally longer and more detailed. Biographies that are from the beginning conceived as part of a rosary, on the other hand, are more archetypal. In Mar pa's case, a good example is the collection compiled by rGyal thang pa bDe chen rdo rje (13th c.), which runs until the 'Brug pa bka' brgyud saint rGod tshang pa bDe chen rdo rje (1189-1258), and where all biographies follow the same style with verses and commentaries, and similar formulas at the beginning and in the end.[86]

The rNgog rosaries are quite different from such successions of biographies in that the individual biographies in the rosaries cannot be separated, hence the whole lineage is often considered as such, as a line unfolding in time rather than as a succession of discrete units. There is a general introduction, then Mar pa's biography, then a description of the rNgog ancestors, followed by the religious lineages of each transmission, and the biography of each of the rNgog, with some overlapping. In the end, several sections list the translations used in the rNgog tradition, works composed by each of the rNgog masters, their year of birth and age at death, and their disciples. This style is quite idiosyncratic and was modified in later texts that adopted a more conventional style, listing together all details pertaining to each individual. The effect is to emphasize the concept of lineage over that of individual, and, like in genealogies, to focus on the image of the group, the rNgog, rather than on any one of them. This aspect brings them closer to records of teachings received (*thob yig*), and it is possible that they were modelled on such a text or meant to stand for it.

Records of teachings received

The genre of "records of teachings received" differs from that of hagiographies, despite having the same general aim of retracing the origin of a master's lineage, hence establishing his legitimacy and identity with regards to other lineages. Their style ranges from simple lists of teachings received by the successive masters with short explanations on each of the transmission (the 4th Zhwa dmar's record for instance)[87] to extensive records narrating the life-stories of the successive masters and the nature of each transmission (the 5th Dalai-Lama's record).[88] Although records including life stories can adhere to the same general style as hagiographies, records are generally more straightforwardly interested in the lineages themselves. They have a bibliographical approach that relies less on the *topoi* of biographies.

---

[85] See the growing literature on gTsang smyon's school for detail (e.g. Larsson 2012, Sernesi 2011b, Quintman 2014, etc.)

[86] Ducher 2017, 105-110.

[87] See references in the bibliography and below in the part on the *gsan yig* used in the present dissertation.

[88] Ehrhard 2012. Another example is the four-volume record of Za ya Paṇḍita Blo bzang 'phrin las (1642-1715) studied by Sangseraima Ujeed for her 2017 dissertation at the University of Oxford.

They aim at accurately establishing that the teaching of a given individual is valid because it uninterruptedly traces back to a founding figure. For this reason, they are often more reliable when trying to establish networks of individuals, though they are not devoid of manipulation or errors.

There is no extent record of teachings received by individual members of the rNgog clan, but ST1 and ST2 do, in places, resemble such writings, and it is possible that they were modelled on now unavailable records, or conceived as such, thus replacing former, informal records. In fact, ST1 and ST2 can be considered a crossover between hagiographies and records of teachings received. More than biographies, they aim at retracing the rNgog lineage with all of its constituent transmissions and, more than records of teachings received, they aim at inspiring disciples by emphasizing the greatness of rNgog masters and of the lineage as a whole.

Religious history

Another genre that is crossover between hagiography and record of teaching received is that of "religious history" (*chos 'byung*), several of which are used in the present study. This kind of text offers a more global approach to the history of religious traditions and of Buddhism in general. They often start with the Buddha and reach all the way to the author's master, with indistinct divisions between a master and his disciples. Typically, chapters describe whole traditions rather than individuals. A difference between rosaries ("series of hagiographies") and religious histories is that the former are generally more simple, with one line of individuals handing each other a teaching, with only one or sometimes a few individuals during each generation, and only one tradition (thus, the *Rosaries*, for instance, only describe the rNgog traditions.) Religious histories, on the other hand, have more chapters; they go forward and backward in time, beginning again with each tradition. The *Deb ther sngon po*, for instance, compiles a large number of hagiographies, rosaries, records of teachings received, and probably other genres as well, thus forms a massive history that describes all trends of the bKa' brgyud schools sometimes in considerable detail.[89] A specific characteristic of religious histories is that they are more interested in comparing chronology and dates than rosaries or hagiographies. The *Deb ther sngon po* and *lHo rong chos 'byung*, for instance, attempt to precisely define the various phases of Mar pa's life by stating his age at each important junction, and both give precise dates of birth and death for most of the rNgog. Hagiographies, on the other hand, may give Mar pa's year and age of death, often without much precision, and leave the rest of the progression rather vague.

The final term that I would like to mention is *lo rgyus*, which appears in the end of the *incipit* of ST1, where the author states that he "will write briefly the story of the

[89] See vander Kuijp 2006 for a study of the *Deb ther sngon po* and Van der Kuijp 1996, 42-47, for a discussion of historiographical genres (summarized in Ducher 2017, 24). According to Van der Kuijp 1996, 44, and Van der Kuijp 2006, 4-5, the term *deb ther* is a loanword that entered the Tibetan lexicon from the Mongol *debter* during the 13th century. The term does not mean "annals" as the translation of *Deb ther sngon po* by "blue annals" would lead us to think, but rather "book," as in "blue book" (maybe the original copy had a blue cover?). It is not, therefore, a genre *per se*, even though this kind of text generally refers to historical writings.

venerable and glorious rNgog pas." Van der Kuijp translated this term as "records' although he states that it literally means "tidings of year[s]," and can sometimes be understood as "annals."[90] Dan Martin considers that "*lo-rgyus* ("history" or "story", although in its etymology it apparently means "year familiarity")[91] […][are] by far the broadest genre-term that we might translate as "history," covering as it does both the secular and the religious, but as pointed out long ago by Vostrikov,[92] *lo-rgyus* are often simply narrative works, or "stories," that may have little to do with history as such."[93] Hence, the meaning of the word *lo rgyus* in ST1 should not to be taken as a description of a genre. As indicated by Vostrikov, it simply means that it is the story of the rNgog, a story at the crossroads of several Tibetan genres, hagiography, rosary, record of teaching received, and that was later taken up in religious histories, but a story which, despite the specific connotations associated with each Tibetan genre, generally fits the Western genre of "hagiography."

1.1.2. Why were the *Rosaries* written?

The *Rosaries* describe the lives of people (the rNgog) who are less significant in the psyche of Tibetan Buddhists than Mar pa (or any other lineage founder). The rNgog did not become icons like Mar pa, Mi la ras pa and sGam po pa (*mar mi dwags gsum*) for the bKa' brgyud pas, like the Five Patriarchs (*gong ma lnga*) for the Sa skya pas, or like Tsong kha pa and his two main disciples (*rje yab sras gsum*) for the dGe lugs pas. Those Tibetan icons represented role models to emulate and masters to worship for hundreds of generations of disciples, and were thus the object of a considerable quantity of works. The rNgog narratives, on the other hand, are less hyperbolic. As I argued above, the *Rosaries* fit several genres in Tibetan life-writing: they can be seen as hagiographies of saints (*rnam thar*), and more specifically as "outer biographies' (*phyi'i rnam thar*);[94] as a series of life-stories (*phreng ba*) or as the closely related family genre of genealogy (*gdung rabs*); and as records of teachings received (*thob yig*). Given that versatility, one may well finally wonder: why were they written?

The main types of information the *Rosaries* provide are the identity of each member of the family lineage, their responsibility with regards to spiritual transmission, the teachings they

---

[90] Van der Kuijp 1996, 42-43.

[91] The terms may in fact not be related to the word *lo* for "year" but the expression *lo* used in the end of sentences to indicate an oral report, especially one that is uncertain. See for instance the third meaning in the *Bod rgya tshig mdzod chen mo*, 2: 2805: *lo grag zer gsum gyi ya gyal zhig ste ma rangs pa'i tshig/ 'di skad lo/ mkhas pa mgo rmongs so lo/* […] This question would deserve a much more thorough analysis.

[92] Vostrikov 1970, 204.

[93] Martin 1997, 14-15.

[94] *rNam thar* is sometimes distinguished into "outer biography" (*phyi'i rnam thar*), that deals with the outer acts of a character, his education, the people he meets, etc.; "inner biography" (*nang gi rnam thar*) expounds the inner life of the protagonist, such as his dreams and visions; and "secret biography" (*gsang ba'i rnam thar*) relates his spiritual experiences and achievements. In some cases, for example the biographies of Karma Chags med (1613-1678), there are more categories (see the forthcoming dissertation of Miroslav Hrdina from Bonn University).

received, the names of their masters and disciples, the works they authored, and their dates of birth. This kind of information generally found in genealogy and records of teachings received suggest that they were primarily intended as inner documents for disciples and family members, allowing them to know the origin and the course of their lineage. In addition to such basic facts, details of the type found in hagiographies are also provided, which suggest that they aimed to create not only a better understanding of the lineage, but also to be a source of inspiration. More largely, they build the legitimacy of the rNgog tradition through the prestige of the lineage rather than in terms of personal charisma. This is especially clear in the systematic referencing of Mar pa. The *incipit* of ST2 declares:[95]

> Incarnations of all Victorious of the three times,
> Glorious hooks guiding beings with compassion,
> Summits of the crest jewel embodying the precious bKa' brgyud
> I prostrate with respect to the feet of the Venerable Mar rNgog (who are principal among bKa' brgyud [orders])!
> I will write briefly the story
> Of the venerable and glorious rNgog pas:
> Their successive bone and religious lines
> And the way they received and composed teachings, among other things.

Thus, the rNgog rosaries are statements of identity that are also distinguishing the rNgog from other lineages, and especially singling them out as the legitimate holders of Mar pa's teachings. They were composed during a century, between the mid-14th and mid-15th century, when lineages and orders had largely proliferated and were increasingly sectarian, and at a place, Central Tibet, which had become the political centre of Tibet, with an increasing competition between lineages to gain funding from rich patrons and rulers. The rNgog pa thus created these narratives in order to fix their identity as the Mar rNgog and to gain from it the symbolic capital needed to spread further.

What we may finally wonder is whether such writings are reliable sources for an historiography of the rNgog lineage, which is the aim of the present study. As argued, biographies and hagiographies are now generally considered legitimate sources of information of the biographed (interest for the actors) as well as of the biographer (understanding of the circumstances that led the author to redact the text). The multifarious genre of the *Rosaries*, and especially its closeness with genealogies and records of teachings received mean that they were not only written to inspire, but as well to distinguish the rNgog from other lineages and to document their past. Thus, it is clear that the *Rosaries* and the texts they inspired, are based on older documents with historical information on the actors. Errors and manipulations are not excluded, and are in fact present; names and dates differ in the various versions, that shows that at the time of redaction there was no certainty; some relationships and transmissions (for example the claim that rNgog Chos rdor received *Saṃputa* from Rwa Lo tsā ba) point to a distortion of the available fact (the meeting between Rwa Lo tsā ba and Chos

[95] ST2, 26: 1-2.

rdor's son mDo sde) that may be explained by a competition between lineages and an accrued necessity of legitimating some transmissions. In order to distinguish "fact" from "fiction," or rather, information about the biographed from information on the author, a special effort is made in the present dissertation to understand where the texts come from, why they were written, what is their larger background, and to delineate their history and assess the information they provide. With this as a base, it is felt that some knowledge can be gained on the Mar rngog bka' brgyud history.

1.2. Origin of the sources

The study of the rNgog pa lineage has long been limited to a few dharma histories, such as the *lHo rong chos 'byung* and the *Deb ther sngon po*. The situation changed when, in the aftermath of the Cultural Revolution, more than twenty thousand works were discovered in the Chapel of the Sixteen Arhats (gNas bcu lha khang) within the dGe lugs pa monastery of 'Bras spungs, in lHa sa. In the following sections of Chapter I.1, I will first present what is known about the gNas bcu lha khang where many previously unavailable rNgog texts were stored, and then the texts themselves, starting with historiographical narratives and the religious histories they inspired. Third, I will focus on tantric materials of the rNgog pa lineage as well as on the later collections in which these were compiled, enlarged and systematized. Finally, one of these collections that occupies a central place in the present dissertation, the *bKa' brgyud sngags mdzod*, will be examined in detail.

1.2.1. The gNas bcu lha khang library

In 2004, a two-volume catalog listing the titles of texts recovered in five libraries of 'Bras spungs Monastery was published (henceforth DC, for Drepung Catalog). In it, more than one hundred titles are attributed to members of the rNgog family, especially rNgog Zhe sdang rdo rje (the tantric alias of rNgog mDo sde), and related authors. Many of these titles have been published in 2010 in the *rNgog chos skor phyogs bsgrigs* (NKCK), and those narrating the history of the lineage (the *Rosaries*) have been reproduced in the *Lo rgyus rnam thar phyogs bsgrigs* (LGNT). All of these texts together with some others have been digitally input and published in book format in 2013, with the title *rNgog slob brgyud dang bcas pa'i gsung 'bum* (NKSB).

The DC contains an introduction (1: 1-16) describing the origin of the texts catalogued and the way they were sorted, together with pictures of some of the volumes preserved thanks to the efforts of the dPal brtsegs bod yig dpe rnying zhib 'jug khang. The editors compare the importance of the discovery of these texts for the history of pre-17th century Tibet to that of the Dunhuang library-cave for the history of pre-11th century Central Asia (p. 10). Despite their crucial importance, little is known about them. Several blog entries describing the collection used to appear on the TBRC blog a few years ago but are now unavailable.[96] These

[96] They were written by scholars who worked on some of these texts, namely Michael Sheehy, Maho Iuchi, Kazuo Kano and Joerg Heimbel. I thank Maho Iuchi, Kazuo Kano and especially Joerg Heimbel who discussed with me the contents of this section.

articles, together with the introduction of the Catalog, serve as my main source of investigation, unless duly noted.

The DC lists the content of five libraries within the ’Bras spungs Monastery:[97]

- The library of the gNas bcu lha khang, located on the second floor of the main assembly hall (DC, vol. 1: 1- 2: 1958);
- The library of rJe Lam rim pa Ngag dbang phun tshogs (1922-1997) in the ’Bras spungs Palace (*’bras spungs pho brang gzim chung gi rje lam rim pa’i dpe mdzod*, DC, vol. 2: 1959-2179);
- The library of the 5th Dalai Lama in the dGa’ ldan Palace (*dGa’ ldan pho brang zim chung*, also called *Mi dbang lha khang*, DC, vol. 2: 2180-2197): it contained eighteen *bKa’ ’gyur* and *bsTan ’gyur* from various libraries (DC, 9);
- The library at ’Bras spungs sGo mang Monastic College (DC, vol. 2: 2198-2327): it was constituted in the 1930s and 1940s (DC, 10);
- The library at ’Bras spungs Kun dga’ rwa ba (DC, vol. 2: 2328-2475): it was constituted recently but contained some old Indian manuscripts (DC, 7).[98]

Of these five, it is the first location, the gNas bcu lha khang, or “Chapel of the Sixteen Arhats,” which housed the greatest number of texts. The Catalog has 22694 entries for this library, but this is an inventory of only a fraction of the original content. According to the DC (p. 12), some of the volumes were relocated to the Potala at the time of the 13th Dalai Lama and some thousand volumes were sent to the Palace of Nationalities in Beijing in 1962. According to Michael Sheehy in the TBRC blog entry (now unavailable), other volumes were also dispersed to libraries and individuals throughout the Tibetan Autonomous Region in the late 1980s and 1990s.[99] The extent of the original materials is recorded in a comparative table (pp. 14-15). It shows that, according to the number written on the title pages, there used to be at least 4416 bundles of texts in the library, out of which 1833 were actually present at the time of cataloguing in 2002. In the case of material related to *Hevajra* (marked *phyi ga*), for instance, only 114 out of the original 204 bundles are described (pp. 315-397), and only 554 out of the 1032 bundles of bKa’ brgyud cycles (*bKa’ brgyud chos skor sogs sna tshogs*, marked *phyi ma*, pp. 573-1357).

The DC provides seven types of data for each title: the number written on the title page (*ka rtags*), the sorting number (*tshan grangs*), the text’s title (*le tshan so so’i mtshan*), the author (*rtsom pa po*), the general physical characteristics (print, manuscript, etc., *yig gzugs*), the number of folios (*ldeb grangs*), and the size in centimeters (*ldeb tshad* cm). As far as numbers

---

[97] See Akester 2016, 109-113, for a description of ’Bras spungs Monastery.

[98] This may be Atiśa’s manuscripts, which used to be in Rwa sgreng. According the DC, 7, the Kun dga’ rwa ba library housed 127 of these manuscripts, but only 16 remain after the Cultural Revolution. See Kano 2015 for details on the search of these manuscripts.

[99] This statement is confirmed by Che tshang Rinpoche (private communication, 25.06.2017): during the 1990s, he managed to have a photocopy machine brought inside the monastery and to copy many texts, that are now in his monastery in Dehra Dun. The originals were later collected by A mgon Rin po che and published in the DK-DZO in 2004.

written on the title page are concerned, there are two main types: texts marked with *phyi* and texts marked with *nang*. Titles from the gNas bcu lha khang have *phyi* (or exceptionally only a number), others have *nang*. This means that titles in the gNas bcu lha khang come from outside libraries, and others come from the ’Bras spungs Monastery. Many collections published recently, such as the *rNgog chos skor phyogs bsgrigs*, the *bKa’ gdams gsung ’bum phyogs bsgrigs* and many others, are non-dGe lugs pa works that were stored in the gNas bcu lha khang. If they have a mark, it begins with *phyi*, “outside.”

Although no index to the collection was found within the Sixteen Arhats Temple (DC, 11), the code written on the title page is a precious source of information allowing us to imagine the original scale of the material housed in the library. No explanation is provided for it in the catalog, but it is likely that this code was inscribed on the volumes in the 17th century, when the content of the libraries seized was divided according to topic in an order reminiscent of the *bKa’ ’gyur* divisions and then stored in the library (DC, 14-15). Each title from the gNas bcu lha khang has the mark *phyi*, followed by a letter indicating its subject matter,[100] and a number. There are generally several titles with the same code, and the numbering is not continuous. This likely means that the numbers refer to bundles of texts which may have been tied together at the time of importation (but may or may not have been at the time of cataloguing). In the case of rNgog texts, there are many different bundles with many different sizes of paper and styles of writing. This means that the bundles came from various libraries, or at least that they did not constitute a single, homogeneous collection, hence that the *rNgog chos skor phyogs bsgrigs* is an artificial collection which did not exist in the 17th century. As for numbers present in the NKCK but missing in the DC, they may figure among the ones moved to the Potala (rNgog Rin chen dpal bzang po’s writings, for instance),[101] the Palace of Nationalities or other institutions.

The DC states that these texts were “books of the Great Fifth within the gNas bcu lha khang” (*gnas bcu lha khang nang bzhugs rgyal ba lnga pa chen po’i gzigs dpe*, DC, 14) and the editors sometimes refer to his “private library” (*rgyal ba sku phreng lnga pa’i sku sger dpe mdzod*, DC, 11). Although the exact circumstances of the formation of the “library” are not described in the catalog, which insists on the fact that the texts are now available thanks to the efforts of the 5th Dalai Lama (DC, 9), this “private library” was actually a storeroom for the contents of monastic libraries seized when the dGa’ ldan pho brang government took power in 1642 and in following years with the assistance of the Mongol armies of Gushri Khan.[102] It is possible that the volumes were housed on shelves and available for selected readers, but according to the DC (p. 7-8, 11), the texts were sealed during several centuries and very few

---

[100] Many titles classified in bKa’ brgyud cycles are related to *Hevajra* or *Nāmasaṃgīti*, which should normally be classified in the “Hevajra” or “Yogatantra” sections. It is therefore likely that the sorting was done quickly and not in a very systematic manner.

[101] Potala Catalog, 118-119.

[102] Drepung Catalog, 7: *rgyal dbang sku phreng lnga pas bod du dga’ ldan pho brang gi srid dbang btsugs rjes bod kyi sa khongs khag gi dgon sde khag dang dpe mdzod khag du bzhugs pa’i phyag dpe rtsa chen rnams bsdu rub mdzad*. See Shakabpa 2010, 344-353. bSam grub rtse was seized in 1642. The other monasteries may have been seized in the following years, after a rebellion of forces faithful to the gTsang regime. rTse la sgang pa in particular is mentioned (*op. cit.*, 349 and n. 33, p. 376).

people were aware of their existence. The DC (p. 7) names some of the libraries contained in the gNas bcu lha khang storeroom:

- The library of the Phag mo gru pa hierarchs in the sNe gdong Palace, lHo ka;[103]
- The library of the gTsang pa hierarchs in the bSam grub rtse Palace, in gZhi ka rtse;
- The Karma bka' brgyud Library of rTse lha sgang (rTse la sgang), in Kong po.

Although Tāranātha's library in rTag brtan phun tshogs gling is not mentioned by the DC, the monastery was seized by the government in 1650 and turned into a dGe lugs monastery in 1658.[104] It is therefore likely that its contents were also included in the storeroom, as evidenced by the numerous texts related to the Jo nang school recently published by dPal brtsegs, such as the *Jo nang tā ra nā tha'i gsung 'bum phyogs bsgrigs par blangs par ma*, the *Dus 'khor 'grel mchan phyogs bsgrigs*, and others. According to the information provided by the present Che tshang Rin po che, there were also around forty boxes of 'Bri gung bka' brgyud texts, presumably from 'Bri gung thil. They were retrieved before the start of the cataloging process of the DC and therefore do not figure in the catalog; a large part of what is now called the *'Bri gung bka' brgyud chos mdzod chen mo* comes from there (see below for detail on this collection).[105] Although the libraries mentioned surely had a very eclectic content, it is also possible that other unnamed libraries were seized, as one finds many texts associated with the Zhi byed, gCod yul, Shangs pa, gYa' bzang, mTshal pa, sMar tsang, and sNye mdo traditions, as well as works of dGe lugs pa lamas whose writings are now unavailable (DC, 8).[106]

The three libraries listed by the DC, Tāranātha's library and the 'Bri gung library were all certainly rich in bKa' brgyud materials as evidenced by the large amount of bKa' brgyud cycles listed in the catalog, and could all have contained rNgog collections. As far as the first is concerned, The Phag mo gru pa hierarch Grags pa 'byung gnas received several transmissions from rNgog Byang chub dpal and was an important patron of Lo chen bSod nams rgya mtsho (1424-1482). Lo chen was instrumental in the transmission of the seven maṇḍalas of the rNgog to the 4th Zhwa dmar, who himself served as the gDan sa mthil *spyan snga* for twelve years.[107] It is therefore likely that the sNe'u gdong Palace contained texts of the rNgog tradition. Tāranātha, like the 4th Zhwa dmar, was an important proponent and compiler of the rNgog tradition, and his library too could have housed rNgog materials. As far as the bSam grub rtse Palace is concerned, no specific link with the rNgog is known, but as the regime was close to the Karma bka' brgyud order, it could also have contained rNgog texts. The 'Bri gung materials for their part probably date back to the period of the 4th Zhwa dmar, who had close ties with the 15th and 16th throne-holders, Kun dga' rin chen and bKra shis phun tshogs (see below for details). Finally, rTse lha sgang was a Karma bka' brgyud

[103] Akester 2016, 409-411.

[104] Stearns 1999, 70-71; Sheehy 2009, 227. Akester 2016, 623-628.

[105] Personal discussion with Che tshang Rin po che, 25 June 2017.

[106] Shakabpa 2010, 349; Shamar 2012, 46.

[107] See below Chapter II.4. and Ehrhard 2002b; Shamar 2012, 6. The title *spyan snga* litteraly means "in the presence" ("in front of the eyes"). It was used in the Phag mo gru pa religious lineage and regime as an honorifc title for the head of the gDan sa mthil monastery.

Monastery in the Kong po region. It housed a renowned library established by the 1st Karma pa and running until the time of the 10th Karma pa. In it was a treasure room called the "Black Treasury" (*mdzod nag ma*), containing *inter alia* a large biography of Mi la ras pa.[108] It is possible that several collections published by dPal brtsegs in the Mes po'i shul bzhag series come from rTse lha sgang, for instance the *lHo brag mar pa lo tsā'i gsung 'bum* (vols. 210–216, published 2011), the *rJe btsun mi la ras pa'i gsung 'bum* (vols. 217–221, published 2011), the *Ras chung snyan brgyud skor* (vols. 256–274, published 2011), the *sGam po'i gdan rabs rim byon gyi gsung 'bum* (vols. 275–293, published 2013), and others. The name of 'Bras spungs's "Chapel of the Sixteen Arhats' derives from the statues of the Sixteen Arhats housed in the chapel, which came from rTse lha sgang.[109]

Thus, somehow ironically, the seizing and sealing of these libraries in the 17th century rescued many books from the destructions of the following centuries and, often, oblivion. Although 'Bras spungs, like most other monasteries in Tibet, suffered greatly after the communist takeover of 1959, its buildings were not razed during the Cultural Revolution, and the content of the gNas bcu lha khang remained intact.[110] When Chinese policy towards Tibet was liberalized after the 1978 Eleventh Party Plenary Session, 'Bras spungs slowly started to operate again, and the library of the gNas bcu lha khang was opened during the 1980s. Since then, many publications containing a high proportion of texts coming from gNas bcu lha khang, such as the *rNgog chos skor phyogs bsgrigs* and the *bKa' gdams gsung 'bum*,[111] have been published, shedding new light on the cultural, religious and political life of premodern Tibet.

1.2.1. Texts of the Mar rNgog tradition in the gNas bcu lha khang library

No catalog of the gNas bcu lha khang library was found *in situ*, and as just described we can only guess the origin of the texts it contains, the bundles having suffered a considerable amount of reorganization when they were stored in the library. A chart of the Mar rNgog titles contained in the NKSB, the NKCK, the DC and other collections is included in Appendix 3. An analysis of this chart reveals the following information:

- Out of the 159 texts reproduced in the NKSB, only 135 belong to the Mar rNgog tradition (vols. 1 to 28). Six texts in the NKCK are not reproduced in the NKSB, which is a total of 141 texts of the Mar rNgog tradition contained in either NKCK,

---

[108] Quintman 2014, 105-107 and notes p. 253. Quintman 2014, 106, indicates that the Black Treasury may have been intact until the Cultural Revolution, but it is likely that it was actually emptied in the 17th century. For a description of the modern location, see Chan 1994, 749.

[109] Phur bu lcog ngag dbang byams pa (1682-1762): *grwa sa chen po bzhi dang rgyud pa stod smad chags tshul pad dkar 'phreng ba*, 96-97: *rim gyis rgyal ba karma pa'i thugs dam rten du kong po rtse lha sgang du bzhugs pa/ rgyal dbang lnga pa chen po'i thugs dam rten du spyan drangs te 'dir bzhugs pa yin.*

[110] DC, 12; Goldstein 1998, 25.

[111] See Kazuo 2007. According to the TBRC blog, "In the first set [vols. 1-30 of the *bKa' gdams gsung 'bum* published in June 2006], for instance, 110 works of a total of 131 are from Nechu Lhakang and 21 other texts come from various monasteries such as Sera, Palkor Chode, and Gomang Monastic College at Drepung Monastery. It also contains manuscripts from private collections, including from the late E. Gene Smith of TBRC." Entry now available on https: //www.douban.com/group/topic/38726779/ (accessed 2017.04.21)

NKSB, or both. The 24 texts (vols. 29 to 34) that do not belong to the Mar rNgog tradition (works by Mi bskyod rdo rje, gSer sdings pa gZhon nu ’od, Mar pa do pa and rDog Āryadeva) probably also come from the gNas bcu lha khang but they are difficult to identify in the absence of the manuscripts reproductions.

- Out of the 135 Mar rNgog texts in the NKSB, 59 are reproduced from the NKCK (43,7%)

In these 59 texts in the NKSB that are reproduced from the NKCK, and if we add the 6 that are in the NKCK but not in the NKSB (total 65):

- 42 are clearly identified in the DC;
- 10 have a mark indicating that they come from the gNas bcu lha khang but are not listed in the DC;
- 12 have no mark. The absence of a mark hinders their identification, but they may figure in the DC;
- 1 does not come from the gNas bcu lha khang. This is the *Rin chen rgyan ’dra* of rNgog Zhe sdang rdo rje which figures several times in the DC. The version in the NKSB is not that of the NKCK and is not one of those listed in the DC.

Out of the 135 texts of the rNgog tradition in the NKSB, 76 are not in the NKCK. Of these 76, 52 come from other or unknown sources:

- 5 (mostly related to the six doctrines) are copied from the DK-DZO;
- 25 (all related to Dud sol ma) are copied from the KGND;
- 4 are from the *bsTan’gyur* and have a Tōhoku number;
- 18 are of unknown origin.

The rest (24 texts) almost certainly come from the gNas bcu lha khang:

- 3 collective biographies (ST1, ST2, ST3) were initially reproduced in the LGNT (except for ST3);
- 1 biography figures in the *Mar pa’i gsung ’bum* published by dPal brtsegs;
- 11 texts by rNgog Rin chen dpal bzang po are in the Potala Catalog. They were probably retrieved by the editors between the edition of the NKCK and the NKSB;
- 9 have a title very reminiscent of one in the DC but are difficult to ascertain because the NKSB does not reproduce the original marks present on the title pages.

Thus, from this analysis of the content of the NKSB and NKCK, we can deduce that 89 Mar rNgog texts and 24 others (113 in total out of 165), that is to say 68 % of the total, and 63 % of the Mar rNgog texts (89 out of 141) come from the gNas bcu lha khang. These are tantric materials (commentaries, *sādhana*s, initiation rituals…) and biographies. 15 % come from the KGND; these are related to the practice of Dud sol ma. 2 % come from the DK-DZO. The rest (around 15 %) come from unidentified sources. All works of the NKCK come from the gNas bcu lha khang, except the *dPal kye rdo rje’i ’grel pa rin chen rgyan* by rNgog Chos kyi rgyal mtshan, which figures in the TBRC database (W1KG11759). The origin of the TBRC version is unknown.

Although 63 % of the Mar rNgog texts included in the NKSB come from the gNas bcu lha khang, this does not represent all the rNgog material that was present in the gNas bcu lha khang at the time the DC was catalogued. There are many texts whose titles are listed in the DC but that are not reproduced in either the NKSB or NKCK.[112] Some titles are listed several times in the DC, but only one version was reproduced in the NKCK and/or NKSB. This is the case especially of rNgog Zhe sdang rdo rje's major commentary on the *Hevajratantra* called *Rin chen rgyan 'dra*. There are at least five copies listed in the DC,[113] but none of these is reproduced in the NKCK. These duplicates show that the rNgog material almost certainly comes from various libraries. Very often, texts by rNgog authors are included in larger bundles with other texts related to the same subject. There is for instance in the DC a bundle of texts related to the *Hevajratantra*, with several works on the rNgog tradition composed by Lo chen bSod nams rgya mtsho, together with works on the Lam 'bras tradition as well as rituals composed by Kun dga' grol mchog and Tāranātha.[114] Another example is a bundle on the *Catuṣpīṭhatantra*,[115] with scriptural works, several texts by Zhe sdang rdo rje, as well as works by Sa skya authors and Lo chen. Yet another is a bundle on the *Mahāmāyātantra* with scriptural texts,[116] rNgog works, and other commentaries and rites by Padma dkar po, the 8th Karma pa and the Sa skya pa Chos rgyal 'phags pa. Although the size of the folios and their style of writing are sometimes homogenous in a single bundle, sometimes (in the *Mahāmāyā* volume for instance), they are quite diverse. Hence, it is difficult to pinpoint a single origin or a single period during which these texts were copied. It is likely that the rNgog works contained in the gNas bcu lha khang come from the various lineages in which the tradition spread, and they should not, therefore, be considered a coherent and complete collection. Not everything that exists (or existed) is there, and the extent to which the materials present are strictly related to the rNgog tradition is also not clear. Despite this limitation, the gNas bcu lha khang library contained many texts whose publication greatly advances our knowledge of the rNgog tradition.

Finally, a short note should be added concerning the last volumes (vols. 29-34) of the NKSB. They contain some of the writings of Mi bskyod rdo rje, gSer sdings pa gZhon nu 'od, Mar pa do pa and rDog Āryadeva. They were not part of the NKCK and are not related to the rNgog tradition. It is likely that the editors of the NKSB included them in the collection for the relationship, or pseudo-relationship, these authors had with the rNgog lineage (see I.1.4.1). As the link is tenuous, however, no special effort is made in the present dissertation to account for these texts, although in probably all cases they also come from the gNas bcu lha khang.

---

[112] A cursory analysis of the DC reveals that 39 texts may be related to the rNgog tradition given their title and/or author but do not appear in either the NKCK/NKSB. This excludes works on a topic related to the rNgog tradition but without an author or a clear link to the rNgog tradition and works on the tradition by other authors (Lo chen bSod nams rgya mtsho, Tāranātha, Kun dga' grol mchog, the 4th Zhwa dmar, etc.).

[113] n° 003378, n° 003615, n° 003616, n° 003778 and n° 004021.

[114] DC, 392-393, bundle *phyi ga 196*. The previous bundle, *phyi ga 195*, similarly aggregates several kinds of works related to the Hevajra practice, including the *Rin chen rgyan 'dra*.

[115] DC, 664-665, *phyi ma 153*.

[116] DC, 898-899, *phyi ma 564*.

Now that the origin of the most significant sources for the present study has been ascertained, we can present and examine the two main types of texts related to the rNgog tradition that were housed in the gNas bcu lha khang, historiographical writings and tantric rituals and exegesis, and relate them to the other histories and rituals that do not come from ’Bras spungs but are also important sources of information on the rNgog lineage.

1.3. Historiographical narratives

One of the most acclaimed recent publication containing texts largely coming from the gNas bcu lha khang is the 120-volume collection of the “Compilation of Tibetan Histories and Biographies’ (*Bod kyi lo rgyus rnam thar phyogs bsgrigs*, henceforth LGNT), published by dPal brtsegs at the mTsho sngon mi rigs dpe skrun khang in four sets of 30 volumes between 2010 and 2017. In the first folios of volume 22 (*za*) figure two historical works (*the Rosaries*) composed within the rNgog family that were the source of most later writings on their tradition. The two were reproduced in the NKSB, together with a third collective summarized biography. The three texts come from the gNas bcu lha khang and were kept in different bundles. Each bundle is a mixed collection of biographies of various lineages; it is not clear whether the bundles were formed upon arrival in the gNas bcu lha khang on the basis of biographies dispersed in other volumes or if they were already grouped thus in the original library/ies. As it is a bit unusual that several biographies, often related to different lineages, are together rather than with the works written by the biographed or by his lineage, I am inclined to think that original collections were fragmented upon arrival in the ’Bras spungs library and regrouped according to topic.

1.3.1. The *Rosaries*

Only two out of three texts were published in the LGNT. The third was not published as a facsimile before its reproduction in the NKSB. It is therefore difficult to draw any conclusion on the object itself.

Chart 1: Chart of the data provided in DC (together with the abbreviations)

phyi ra 13 **ST1**	n° 016990 DC, 1508	*Bla ma rngog pa yab sras rim byon pa’i rnam thar rin po che’i rgyan gyi phreng ba bzhugs pa yin no*	rNgog bsod nams dpal	*’bru tsha*	12 fol	43,5 x 7,7 cm
phyi ra 31 **ST2**	n° 017030 DC, 1511	*rJe mar pa nas brgyud rngog gzhung pa yab sras kyi bla ma’i rnam thar nor bu’i phreng ba bzhugs so*	rNgog ston bho te shri	*dpe tshugs*	13 fol	49 x 8 cm
phyi ra 181 **ST3**	n° 017623 DC, 1561	*rJe btsun mar rngog bka’ brgyud kyi rnam thar*	Byang chub dpal ba	*dpe tshugs*	5 fol	Ø

One first notes that ST1 and ST2 are related in terms of size, although ST2’s folios are wider. As far as can be seen from the reproduction in the LGNT, the *ductus* of both is quite similar, with 8 lines of text in similar-sized letters. Both texts are in cursive letters, with a slightly different handwriting, characterized as *’bru tsha* (“grain shaped’?) and *dpe tshugs* (“book form”) in the DC, although to my eye the two are not very far apart. Although the two may

not be by the same hand, the overall similarity does not exclude that they were copied at the same place or by people from a similar background.

Style and content

Among the three collective biographies of the rNgog pa lineage preserved in the gNas bcu lha khang, two, ST1 and ST2 (e.g. the *Rosaries*), are very similar, with variants in the formulations and notes. They can therefore, to some extent, be considered alternative recensions, and I have edited and translated them as a single text in appendix 1 and 2 of the present work, indicating the variations when they occur. As will be seen, the major difference is that ST1, which was compiled some sixty to eighty years before ST2, includes alternative bloodlines and stops earlier than ST2. ST3 is a summary of ST1, rearranging its content in a deeper fashion than ST2.

ST1 can be translated as *Rosary of Precious Ornaments–Lives of the Successive rNgog pa Masters, Fathers and Sons* (*Bla ma rngog pa yab sras rim par byon pa'i rnam thar rin po che'i rgyan gyi phreng ba*), in short *Rosary of Precious Ornaments*.

ST2 can be translated as *Rosary of Jewels—Lives of the rNgog masters from gZhung, Fathers and Sons, from Lord Mar pa's lineage* (*rJe mar pa nas brgyud rngog gzhung pa yab sras kyi bla ma'i rnam thar nor bu'i phreng ba*), in short *Rosary of Jewels*.

There is a clear parallel between the two texts, which are metaphorically referred to as "rosaries of biographies," that is to say as successive biographies of members of a single line of transmission. Despite this appellation, the *Rosaries* are unlike the typical compilations of lifestories generally known under this name. As argued above, they are at the crossroads of hagiographies, religious histories, genealogies and records of teachings received, and were probably intended as internal documents aimed at providing the credentials for the transmission to students of the rNgog tradition and at legitimizing the lineage to outer traditions.

Examining the colophons, it appears that ST2 is a continuation of ST1, drawing largely on its predecessor by quoting it at length. The author of ST1 identifies himself as Dam tshig can gyi rdo rje, and ST2 calls him dPal gyi rdo rje. There is no dPal gyi rdo rje in the rNgog family, but a dPal gyi rdo rje figures in the lineage of Dud sol ma received by Gong dkar ba Kun dga' rnam rgyal.[117] He was a disciple of Rin chen dpal, himself a disciple of Rin chen bzang po (1243-1319), and as master of sLob dpon bZang po dpal, himself a master of rNgog Byang chub dpal (1360-1446). dPal gyi rdo rje's master Rin chen dpal belongs to the rGyal tsha branch. His date of death is not given, unlike those of his brothers Grags pa rgyal and Kun dga' blo gros, which indicates that he may have been still alive when dPal gyi rdo rdo composed ST1. dPal gyi rdo rje was also a disciple of Sangs rgyas seng ge of the gTsang tsha

[117] *Gong dkar gsan yig*, 421; later, this lineage of the common external *sādhana* of Dud sol ma went to Tshar chen (KGND, 6: 60-61) and to the 5th Dalai Lama (DL5 *thob yig*, 1: 369a)

branch (who may have died in 1345). He is also the co-author, together with a Kun dga' rgyal mtshan of a text on Dud sol ma.[118]

dPal gyi rdo rje declares in the colophon of ST1 that the text was compiled in a male iron rat year (*lcags pho byi*), which may be 1300, 1360 or 1420. Given that the latest date of death provided is that of Chos kyi rgyal mtshan (who died in 1359), it cannot be 1300 and it is unlikely to be 1420 because then the year of Don grub dpal's death would be mentioned too. The most likely date of compilation is thus 1360, which fits with dPal gyi rdo rje's dates of activity.

The colophon of ST1 adds that the manuscript was written down by a Punyaśrī (bSod nams dpal) in a tiger year, during a transmission of the rNgog tradition by rNgog Rin po che Byang chub dpal. Although Byang chub dpal is mentioned in the colophon, this part of the text might have been added by the scribe, bSod nam dpal, at the time of copy, and not at the time of compilation.

No date is given for ST2, but the colophon declares that Byang chub dpal put it to writing, slightly editing the version by dPal gyi rdo rje. It is possible this was done at the same time as the copy of ST1 by bSod nams dpal. It is difficult to decide whether ST1 and ST2 were copied by the same scribe. The layout is similar (8 lines of text in *dbu med* of the same length, no margin except in some recto pages of ST2, letters of approximately the same size), but the handwriting slightly differs (in ST1, it is vertical while in ST2 it bends towards the left). The system of notes in ST1 (notes written in smaller character albeit on the same line than the text itself) reveals that the text and the notes were copied simultaneously, hence that it was not an original on which notes were added, but a copy of an original on which the notes were already present. The same can be said of ST2. It is therefore possible that neither text is an original, and both may have been compiled earlier and copied again later, during a tiger year.

ST2 was compiled quite late during the life of Byang chub dpal, as his grandson, Byang chub dpal grub, is mentioned (he was the abbot in 1476, when the *Deb ther sngon po* was compiled). The abbot at the time of composition was Byang chub dpal's son, bKra shis dpal grub, who is called Rin po che in the genealogy. The *Deb ther sngon po* states that he was made abbot during the life of Byang chub dpal, and the shift may have occurred in 1426.[119] The last dates of death are those of Byang chub dpal's father, Don grub dpal (which occurred in 1398), and his uncle Sang yon; both are also the last whose biography is detailed, in clear addition from ST1. All lineages go until Don grub dpal.

The third rosary, ST3, is the most difficult to locate, as no specific information is provided in the colophon and because of the unavailability of the original. Like ST2, the last biography described is that of Don grub dpal. The genealogy is one generation shorter than that in ST2,

---

[118] *'Dod khams dbang phyug khrag 'thung dud sol ma'i phrin las rgyas pa ḍā ki ma'i thugs kyi ze'u 'bru dbye bar bye dpa rgya tsho gsal ba'i sgron me*, NKSB, 14: 293. This Kun dga' rgyal mtshan is called sNgags 'chang a nan dhwa dza (Anandadvaja) in the colophon. He may be a practitioner living in gZhung but not belonging to the rNgog clan.

[119] *Deb sngon*, 499; *lHo rong chos 'byung*, 65 (see Chapter II.4 for details).

stopping with bKra shis dpal grub for the gTsang tsha branch, and Kun dga' bzang po for the rGyal tsha branch. It is therefore likely to have been composed before ST2, and to figure among its source. This is especially clear with regards to the biography of Chos kyi rgyal mtshan, which is longer in ST2 than in ST1 (although Chos rgyal had recently died when ST1 was compiled). ST2's addition is present in ST3, hence both ST1 and ST3 may be the source of ST2.

Comparatively, we may therefore estimate that ST3, a summary and continuation of ST1, was composed in the 1420s, when Byang chub dpal was in his late fifties and had passed on the abbacy of sPre'u zhing to his son bKra shis dpal grub (called Rin po che in ST3) while he focused on teaching. ST2, an extension of ST1 which also includes additions found in ST3, may have been compiled later in the life of Byang chub dpal, while bKra shis dpal grub was still abbot but when his nephew Byang chub dpal grub was born. At that time, bSod nams don grub of the rGyal tsha branch, absent in ST3, also played an active role in teaching the rNgog tradition and was thus called Dharma Lord (*chos rje*). If indeed ST2 was compiled at the time of copy of ST1, during a tiger year, this may be in 1434. It seems anyway safe to consider it was compiled during the 1430s or early 1440s.

These works further influenced religious histories expounding on the masters of the rNgog pa lineage, namely the *lHo rong chos 'byung*, the *Deb ther sngon po* and the *mKhas pa'i dga' ston*, which give the most details on the rNgog pa lineage.

1.3.2. The *Deb ther dmar po* by 'Tshal pa Kun dga' rdo rje (1309-1364); 1346

The *Deb ther dmar po* (*"Red Book"*) is a chronicle narrating the story of various dynasties, both secular–for example the Indian, Chinese, Mongolian, and Tibetan kings and rulers – and religious. The author, Tshal pa Kun dga' rdo rje (1309-1364), was the 10th abbot of Tshal Gung thang Monastery founded by Bla ma Zhang (1123-1193). He had a personal connection with the Yuan court and met regularly with the dignitaries of his time. He was a prolific author, compiled the *Tshal pa bka' 'gyur* and gathered the complete works of his famous predecessor, Bla ma Zhang.[120]

The *Deb ther dmar po* was composed in 1346, hence is the earliest document available about the rNgog family, predating ST1. Despite its brevity, it contains information absent in the *Rosaries*, with regards especially to the successive founding of the buildings and temples of sPre'u zhing.[121] Tshal pa Kun dga' rdo rje states that rNgog Rin chen bzang po (called Bla ma Ri bo pa Rin chen bzang po, 1243-1319) became the master of the practice center and of the hereditary line of Tshal Yang dgon (the monastery related to Tshal Gung thang).[122] It is possible that a special relationship between sPre'u zhing and the Tshal pa seat was established

---

[120] See Martin 1997, 53-54, no. 77, for a presentation of the various editions, and Sørensen and Hazod 2007, 1: 200-202, for Sørensen's translation of Kun dga' rdor rje's life from the *Gung thang dkar chag*. Ducher also Ducher 2017, 118-119.

[121] *Deb dmar*, 63-66, for the rNgog lineage.

[122] *Deb dmar*, 33a: *'tshal pa'i yang dgon sgom sde dang dbon brgyud kyi bla mar gyur.*

at that time, and that Tshal pa Kun dga' rdo rje was in possession of a rNgog history today unavailable, later replaced by the *Rosaries*.

1.3.3. The *lHo rong chos 'byung* by Tshe dbang rgyal (15th c.); 1446-1447.

The *lHo rong chos 'byung* was composed by rTag tshag Tshe dbang rgyal (1400?-1470?) in 1446-1447 and edited in 1451.[123] Tshe dbang rgyal was raised at the sTag lung bka' brgyud monastery of Ri bo che in Khams, where rNgog Kun dga' rdo rje (1145-1222) and rNgog Chos kyi rgyal mtshan (1283-1359) had attracted many disciples.[124] He went twice to central Tibet, where he studied in particular with the abbot of gDan sa mthil *sPyan snga* bSod nams rgyal mtshan (1385-1434)[125] and at whose request he composed the *lHo rong chos 'byung*.[126]

His religious history contains a long passage presenting the rNgog lineage. It was completed in 1446, the year of Byang chub dpal's death.[127] At the outset, the author refers to the genealogy of the rNgog (*rngog gi gdung rabs*) for details on the great virtue of rNgog Chos rdor's ancestors, which may be ST1 or ST2.[128] Despite these words, his main source of inspiration is neither ST1 nor ST2, but ST3, which is a summary and reorganization of ST1. Both ST1 and ST2 have a topical rather than chronological progression: they present big blocks with Mar pa's life, then Chos rdor's ancestors, his descendants, the religious lineage, etc. In the end are long part on all master's works, disciples, etc. ST3, on the other hand, dispatches most of the information in a chronological presentation of each master one after the other, with his works, disciples, etc. This process of rationalization of the information is completed in the *lHo rong chos 'byung*, where the information that was still scattered in ST3 is systematically attached to the person it refers to. The *lHo rong chos 'byung* does not contain any information that is not fundamentally present in ST3, but some data is occasionally interpreted in a different way,[129] or some data unique to ST3 is repeated verbatim in the *lHo rong chos 'byung*.[130]

---

[123] Van der Kuijp 2001, 58

[124] See II.3.4.1. and II.3.4.6. for details.

[125] See Sørensen and Hazod 2007, vol. 2: 740 ff. for a presentation of the author; Van der Kuijp 2001 and Martin 1997, n°118 for bibliographic notes on the publishing of the *lHo rong chos 'byung*.

[126] *lHo rong chos 'byung*, 844-845

[127] *lHo rong chos 'byung*, 65: *rngog mdo sde 'khrungs nas da lta me pho stag lo* … The part on the rNgog lineage is from p. 50 to 65 (*dbu med* version, 0061-0078.)

[128] The influence of ST1 or ST2 is obvious as the *lHo rong chos 'byung* refers to the rNgog genealogy, absent in ST3: although the phrase in the printed version (*lHo rong chos 'byung*, 50) is slightly opaque: *rngog gi gdung rabs che dge yig tshang na bod kyi rgyal po lha tho tho ri snyan shal dang/ rngog zing po rje bya ba gcig dus mnyam du snang ba ni/ rngog gi gdung rabs shes par bya'o*, it is clarified in the *dbu med* version, 00061: 2: *rngog pa'i gdung rab che rge/ yig tsang pa kyi rgyal po* […] The author of the *Mig byed 'od stong* also acknowledges his debt to the "sayings of the lineage coming from rNgog Chos rdor" (Sørensen 2007, 103: *rngog chos rdor nas brgyud pa'i gsung bsgros*), but there is only a very short part on the rNgog lineage (Sørensen 2007, 64).

[129] For instance, ST3, 88, states that in Yar lung, Chos kyi rgyal mtshan received the *Vajrāvali* from Lo tsā ba Grags pa rgyal mtshan. The *lHo rong chos 'byung*, 62, has it that Chos rgyal studied it with the *sPyan snga* of

There are two notable differences between ST3 and the *lHo rong chos 'byung*. The first is that the *lHo rong chos 'byung* adds one biography to the narrative, that of Byang chub dpal, as it was likely completed a few decades after ST3, in 1446. Byang chub dpal's biography, however, is much less detailed than the previous ones, and Tshe dbang rgyal may have relied only on his own knowledge of oral sources. The second difference is the greater precision with regards to dates. In each case, the element is added to the animal for each of the masters' date of birth and death. These dates seem reliable in most instances, and they are the ones I follow in the present study, unless duly noted.

1.3.4. The *Deb ther sngon po* by 'Gos lo tsā ba gZhon nu dpal (1392-1481); 1476

The *Deb ther sngon po* is one of the most widely used reference books in the domain of Tibetology. It was compiled by 'Gos lo gZhon nu dpal (1392-1481) and his team from 1476 on and was xylographed in the following decade.[131] The text had a large audience from the outset in Tibet and was equally successful in the West thanks to the 1949 translation, under the title *The Blue Annals*, by G.N. Roerich (1902-1960) and dGe 'dun chos 'phel (1903-1952).

Until the surfacing of the *lHo rong chos 'byung* in 1994, and even until now through the English version, the *Deb ther sngon po* has been the main source of information on the rNgog lineage in much of Tibetan and Western secondary literature. The section on the rNgog was compiled in 1476.[132] It is located in the first out of twenty-four chapters of the eighth part of the work, dealing with the "famous Dwags po bka' brgyud [traditions] transmitted from the great translator Mar pa." The biography of Mar pa and the rNgog are grouped together in the same chapter, titled the "Section on the rNgog pa Lineage."[133]

'Gos Lo tsā ba was a disciple of rNgog Byang chub dpal. He met him in sPre'u zhing several times between 1424 and 1431, and received many transmissions from him.[134] Byang chub

---

[gDan sa] thel, Grags pa rgyal mtshan. The reason for the change is not clear, but it is likely that this rather refers to Yar lungs Lo tsā ba Grags pa rgyal mtshan (1242-1346) and that the *lHo rong chos 'byung* is mistaken.

[130] The most striking is the year of death of Kun dga' rdo rje, *chu pho rta* (1222) (ST3, 84). It is the single precise date in ST1, ST2 and ST3, and is repeated in the *lHo rong chos 'byung*, 60. Another example is the name of the wives of the lamas, that figure in ST1 and ST3, but not ST1. It is more likely than ST3 is the source rather than ST1, as it would be strange that ST3 and the *lHo rong chos 'byung* both summarize ST1 in the same way while not depending on each other. It is also more likely than ST3 is the source of the *lHo rong chos 'byung* rather than the contrary as the process of simplification is brought further in the *lHo rong chos 'byung* and ST3 stops earlier in the genealogy.

[131] Van der Kuijp 2006. See also Fermer 2017, 89.

[132] *Deb sngon*, 498: 'Gos lo calculates that thirty years have elapsed at the time of composition since rNgog Byang chub dpal's demise in 1446: *me pho stag de nas ding sang me pho spre'u yan la lo sum cu rtsa gcig song ba yin.*

[133] *Deb sngon*, 399-848*:* Part 8: *mnga' bdag lo tsā ba chen po mar pa nas brgyud de dwags po bka' brgyud ces grags pa'i skabs*; BA, 399-725. Chapter 8.1: *rNgog pa'i brgyud pa'i skabs*, *Deb sngon*, 488-499; BA, 403-414.

[134] Mathes 2007, 139-140, "A Short Account of the Most Important Events in Zhönu Pal's Life." The Tibetan version is in the 4th Zhwa dmar's life of 'Gos lo is in *Zh4 gSung'bum*, vol. 1: 489-495. See Chapter II.4.

dpal is said to have asked ’Gos Lo to compose his biography, but this did not happen.[135] The *Deb ther sngon po* is therefore, together with the *lHo rong chos ’byung*, the most extensive available account of the life of the last major sPre’u zhing abbot, which is to say that we have to rely on the biographies of his disciples to know the life of this important figure (Chapter II.4).

The main source of ’Gos Lo’s account, apart from his personal experience, is the *Deb ther dmar po*. He also had access to one or several of the three rNgog texts, although it is difficult to ascertain which. In most cases, ’Gos lo chose dates of birth and death one cycle of twelve years later than those indicated in the *lHo rong chos ’byung.* I generally prefer the *lHo rong chos ’byung* sets of dates, except in rare cases.

1.3.5. The *mKhas pa’i dga’ ston* by gTsug lag phreng ba (1504-1566); 1545-1565

Like the *Deb ther sngon po*¸ the *Chos ’byung mkhas pa’i dga’ ston*, composed between 1545 and 1565 by the second dPa’ bo gTsug lag phreng ba, is a milestone of Tibetan historiography. gTsug lag phreng ba was among the great bKa’ brgyud hierarchs of his time and a disciple of the Fourth Zhwa dmar Chos kyi grags pa (1453-1524), himself an important holder of the rNgog tradition. His *mKhas pa’i dga’ ston* contains a substantial passage on the rNgog family, written when the family had ceased to play any important religious role in Central Tibet.[136] It is difficult to pinpoint dPa’ bo’s source as it is likely that he knew most of the previously mentioned religious histories, and at least one of the *Rosaries*, which underlies his description of Chos rdor’s ancestors. He certainly had other sources, as he provides details on the founding of the various temples in the gZhung valley that do not figure in previous works.[137] It is possible that they derived from oral narratives by his guru, the 4th Zhwa dmar.

1.3.6. The *Pad dkar chos ’byung* by Padma dkar po (1527-1592); 1575

This religious history of the ’Brug pa school was compiled in 1575 and covers the history of Buddhism from the Buddha to the predecessors of Padma dkar po, the fourth rGyal dbang ’Brug chen.[138] Padma dkar po (1527-1592) was an important holder of the rNgog lineage and his complete works contain rituals and commentaries on six of the seven maṇḍalas (*rngog dkyil bdun*), Dud sol ma and the six doctrines as they are transmitted in the rNgog lineage, under the name merging and transference (*bsre ’pho*).[139] His predecessor, the second rGyal dbang ’brug pa Kun dga’ dpal ’byor (1428-1476), was chosen by Byang chub dpal as the lineage-holder of the rNgog tradition, presided over Byang chub dpal’s funeral, and received

---

[135] Zh4 *gSung ’bum*, 1: 495: *rin po che pa des thugs rjes shin du ’dzin pa’i stobs kyis khyed kyis bdag gi rnam thar cig cis kyang gyis gsung yang bdag gis ma nus pa’i yin gsung.*

[136] *mKhas pa’i dga’ ston*, 776-779. See Chapter II.5.

[137] *Ibid*., 777.

[138] See Smith 2001, 81-86 for details on Padma dkar po and his religious history.

[139] See the index of Padma dkar po’s complete works (W10736) on www.tbrc.org. There is no commentary on one of the seven maṇḍalas, the *Nāmasaṃgīti*.

Nāropa's bone ornaments from him, which since then have occupied a central position in the 'Brug pa bka' brgyud lineage.[140]

Although the section on the rNgog is not very detailed,[141] it presents the main points as a synthesis of the *Deb ther sngon po* and the *mKhas pa'i dga' ston*.[142] Like the authors of these works, Padma dkar po is quite autonomous in his reflection and draws his own conclusions on the basis of the same fundamental material. The influence of the three rosaries found in the gNas bcu lha khang is not visible. Like gTsug lag phreng ba before him, Padma dkar po does not provide the years of birth and death of each of the rNgog masters, although he makes comparative calculations between the rNgog and Mar pa, in the same way than he did in Mar pa's biography.[143]

1.3.7. Other historiographical sources

An important source of information, though rather repetitive, is a part within the commentaries on the *Hevajratantra*, the *Two Segments*, composed within the rNgog tradition: the introduction is divided into six parts, and the fourth is an explanation on "who brought this tantra into the human realm" (*rgyud de mi yul du sus spyan drangs*).[144] This is a description of the lineage from Tilopa, Nāropa, Mar pa, rNgog Chos rdor, and to the author, as well as a practical way to know when the commentary was composed. The information on the masters after Chos rdor are generally very short.

Several other religious histories briefly mention the rNgog in the course of their description of Mar pa's four main disciples, but often without much detail or innovation. The most noteworthy is a biography of Mar pa that has recently resurfaced in the gNas bcu lha khang. It is composed by a Mi bskyod rdo rje, who was a disciple of rNgog Byang chub dpal and wrote after his master's passing, in the second half of the 15th century.[145] The part on the rNgog that concludes the biography is a summary and its sources are therefore not completely clear.[146] Mi bskyod rdo rje insists on the spiritual visions of the rNgog, thereby alluding to their realization. The biography of Byang chub dpal is clearly derived from the personal experience of the author, who was Byang chub dpal's disciple and considers him as an emanation of Mar pa.

---

[140] *Pad dkar chos 'byung*, 610-611. See section II.4.6.

[141] *Pad dkar chos 'byung*, 459-466.

[142] A lot of the phrasing comes from the *Deb sngon*. Clear influence of the *mKhas pa'i dga' ston* is seen with the explanation about locations.

[143] Ducher 2017, 158-159.

[144] Commentary by Zhe sdang rdo rje, NKSB, 3: 10-19. Commentary by a disciple of gZi brjid grags pa, NKSB, 10: 124-142. Commentary by rNgog Chos kyi rgyal mtshan, NKSB, 12: 23-40. Commentary by rTsags Dar ma rgyal po, NKSB, 15: 9-11; Commentary by Tshe'u dar re, NKSB, 19: 15-30. The other commentaries on the *Hevajratantra* contained in the NKSB (vol. 22 to 26) do not belong to the rNgog tradition hence do not contain this part.

[145] See Ducher forthcoming, 131-133, for a presentation of Mar pa's biograhy and its author. The text is in MPSB, vol. 1, pp. 94-163. Mi bskyod rdo rje (MPSB, 1: 163) states that Byang chub dpal died in his 89th year (other sources state he died in his 87th year).

[146] MPSB, 1, 159-163.

Another informative narrative is the *Religious History of Indo-Tibetan Buddhism* (*rGya bod kyi chos 'byung rin po che*) compiled by dGe ye Tshul khrims seng ge (1432-1478) in 1474, which is to say two years before the *Deb ther sngon po*.[147] The text focuses on dating the birth of important characters, and it is notable that dGe ye Tshul khrims seng ge foresees the dates chosen by 'Gos Lo tsā ba. He also uses the phrase *rngog pa'i dkyil 'khor bdun*, the "seven maṇḍalas of the rNgog," which will, after its use in the specific form *rngog dkyil bdun* in Lo chen's biography included within the *Deb ther sngon po*, become the most common way to refer to the rNgog tradition from the late 15th century onwards (see Chapter I.2).

There are several later religious histories that relate the lives of the rNgog, but they mostly repeat previous information, especially that deriving from the *Deb ther sngon po*.[148] It seems that the *Rosaries* were never widespread, as only the *mKhas pa'i dga' ston* testifies to knowledge of at least one of them in the second half of the 16th century. Another conclusion is that, excepting the hagiography of Rin chen bzang po mentioned in ST1 and ST2, which is still unavailable today, there does not seem to be any other extant material relating the lives of the rNgog. It is possible that there was a genealogy prior to the compiling of ST1 in the mid-14th century, but it was completely absorbed by ST1, and no text shows the trace of any substantial alternative narrative that would still be missing.

This is not to say that we know everything about the rNgog. As is manifest in the present work, a great deal of uncertainty remains, and in general few concrete facts are known about them. As the review of sources has shown, however, there is probably not much more to be expected than the historiographical narratives mentioned above. There are, however, other kinds of sources that can be used to further our knowledge, especially records of teachings received by masters who held the rNgog traditions and biographies of masters related to the rNgog.[149]

1.3.8. Records of teachings received

In an article derived from his 2000 presentation at the International Association of Tibetan Studies, Jan-Ulrich Sobisch remarked that "one of the most neglected genres is a historical record that is, for its wealth of data, perhaps second to none, namely, records of teachings received (Tib. *gsan yig* or *thob yig*). These constitute veritable goldmines for anyone engaged in the study of Tibetan literature from literary, bibliographical, or historical perspectives."[150]

---

[147] The passage on the rNgog: *dGe ye History*, 48 (f. 30v). See blog entry by Dan Martin: http: //tibeto-logic.blogspot.fr/2007/04/latest-thing-in-old-histories.html (accessed 28.04.2017)

[148] Examples are the Karma bka' brgyud religious history by Si tu Paṅ chen, the *Zla ba chu shel gyi phreng ba*, 1: 71-72, and mKhas btsun bzang po's *Biographical Dictionary of Tibet and Tibetan* Buddhism, 7: 7-10. Most histories which contain a biography of Mar pa also refers to rNgog Chos rdor, and sometimes to his lineage and Mar pa's other disciples. For reference to these works, see the bibliography in Ducher 2017. For the presentation of Mar pa and his other disciples, see Chapter II.1.3.

[149] These are not mentioned in detail here but in the course of the description of each rNgog's masters and disciples.

[150] Sobisch 2002, 161, specifies on p. 164 that *gsan yig*, litt. "record of teachings heard," is the honorific form of *thob yig* "list of teachings obtained." Hence, Tibetans talk about their *thob yig*, but others' *gsan yig*, especially in the case of a student recording the *gsan yig* of his master in his own *thob yig*. In that case, which is quite

The present dissertation has this goal, namely understanding the rNgog tradition from a philological and historical perspective.[151] This is why I have made use of several records of teachings received by masters related at one point or another to the rNgog, as they are a great help in assessing the teacher and disciple relationships and tracing the evolution of the tradition throughout time. I often used them to supplement incomplete data, especially with regards to masters and disciples of the rNgog whose identity and background is not clarified by the main histories. One of the reasons why *gsan yig* are useful is that from the rNgog pa's own perspective (in the *Rosaries* for instance), the lineage and the family are considered as one, and outsiders are only rarely mentioned. In non-rNgog pa lineages on the other hand, there are more alternative lineages, and consequently more information on disciples outside of the family.

The records of teachings received by the following masters are used in this work:

- Bu ston Rin chen grub (1290-1364): he received several transmissions from rNgog Don grub dpal and from a lineage coming out of the rNgog family after Zhe sdang rdo rje, via Ngo tsha Chos sku.[152] His account is therefore particularly useful to assess lineages outside of the family.
- Ngor chen Kun dga' bzang po (1382-1452): he held a few lineages initially coming from the rNgog but had no direct relationship with them, and his account is therefore also used for outer lineages.
- Gong dkar ba Kun dga' rnam rgyal (1432-1496): he received the seven maṇḍalas from rNgog Byang chub dpal and from his cousin rNgog bSod nams don grub.[153] His account directly relies on notes he obtained from sPre'u zhing.
- Zhwa dmar 04 Chos grags ye shes (1453-1524): he received the seven maṇḍalas and other transmissions from 'Gos Lo tsā ba and Lo chen bSod nams rgya mtsho, themselves disciples of rNgog Byang chub dpal, and he played a great role in the later spread of the rNgog pa lineage.[154]
- The 5th Dalai Lama Ngag dbang blo bzang rgya mtsho (1617-1682): he held several rNgog transmissions, foremost among them that of Dud sol ma.[155]

Among these, the most detailed is the record of teachings received by the 5th Dalai Lama. This huge four-volume record includes, among others, the records of Gong dkar ba Kun dga' rnam

---

widespread, the student includes the *gsan yig* of his various master and adds his own name in the end of each lineage.

[151] Other articles dealing with the subject of *gsan yig* are Van der Kuijp 1995 and Kramer 2008. Sangseraima Ujeed (University of Oxford) prepares a dissertation on the *Thob yig gsal ba'i me long*, which records his teachings received in more than 1000 folios (defended in September 2017).

[152] Bu ston *gSan yig* (Zhol par khang version), pp. 23, 54-56, 74-75, 80, 107-114. See also searchable text on Dan Martin's Tiblical: https: //sites.google.com/site/tiblical/bu-ston-gsan-yig and Van der Kuijp, 2016, 292-297.

[153] See Fermer 2009. *Gong dkar gsan yig*, 413-423.

[154] ZH4 *gSung 'bum*, 6: 705-874. See the *gsan yig*s of 'Gos lo, pp. 766-792 and Khrims khang lo chen, pp. 792-814. Thanks to Kamilla Mojzes (Universität Bonn), who prepares a dissertation on the 4th Zhwa dmar for this reference.

[155] DL5 *thob yig*. See Ehrhard 2012.

rgyal (1432-1496) who was rNgog Byang chub dpal's disciple, that of Tshar chen bLo gsal rgya mtsho (1502-1566/7), who received rNgog transmissions from rNgog bSod nams bstan 'dzin, and that of mGon po bSod nams mchog ldan (1603-1659), who received teachings from the last known rNgog, 'Jam dbyang 'od zer. The 5th Dalai Lama also made extensive use of the writings of 'Gos Lo tsā ba, Lo chen bSod nams rgya mtsho and the Fourth Zhwa dmar pa, who were important holders of the rNgog lineage.[156] The record is therefore generally considered to be quite accurate although the 5th Dalai Lama did not have any direct link with the rNgog, and is particularly useful as it goes beyond simple descriptions of lineages to address the history and controversies surrounding each transmission.

In this regard, it must be noted that there are of course many more records of teachings received containing lineages of rNgog traditions and not all have been used in the present research. One reason for this is that this kind of record is often repetitive; if several masters are successive holders of the same lineage, the lineage is repeated in both versions with more or less masters depending on the position of the master in the lineage. In the case of masters post-dating rNgog Byang chub dpal, the 4th Zhwa dmar and Padma dkar po for instance, the rNgog lineages only diverge after Byang chub dpal, and the two have therefore not been systematically checked. Another reason for inclusion of specific records is that a digital copy was available, rendering access much more convenient (this is especially the case of Gong dkar ba Kun dga' rnam rgyal's and the 5th Dalai Lama's records).[157] Lastly, in order to compile the *bKa' brgyud sngags mdzod*, Kong sprul received many lineages and accounted for them in the introductory catalogue of the collection, enumerating the alternative lineages, often with an identification of their source. Although it would have been necessary to check original accounts, this was not systematically possible. I therefore generally proceeded with the information provided by Kong sprul, which proved accurate each time it was compared with older material.

In addition to records of teachings received, I have also relied on the histories of various transmissions which, at one point or another, were received by the rNgog, especially with regards to traditions not generally associated with them. Among these, Bu ston's *yogatantra* history is the most detailed presentation of the gSang ldan tradition of the *Nāmasaṃgīti*. Although this is one of the rNgog's main maṇḍalas, the history of its transmission is somehow neglected in the rNgog accounts as Chos rdor did not receive it from Mar pa. Bu ston's history of the *Guhyasamājatantra*[158] and rGod tshang ras pa sNa tshogs rang grol's (1482-1559) account of the *Cakrasaṃvaratantra* also proved useful to clarify some of the relationships of the rNgog with other masters.

---

[156] Ehrhard 2012, 81.

[157] Thanks to Mathias Fermer who shared his files with me. His dissertation on the Yar rgyab family and its activity in South Central Tibet (lHo ka) in the 15th and 16th century largely uses the biographies and records of teachings received by some of the masters active in the rNgog lineage, and it will therefore be a welcome addition to the present research.

[158] See bibliography for Bu ston's *Yogatantra* and *gSang 'dus chos 'byung*.

1.4. Tantric materials

With the question of records of teachings received and tantric histories, we move on the borderline between the historiography of the rNgog tradition and the tantric transmissions themselves. The expression "tantric transmissions" refers to teachings associated with the Buddhist tantras, also called esoteric Buddhism, or more traditionally Vajrayāna (*rdo rje theg pa*) and Secret Mantrayāna (*gsang sngags theg pa*), etc. The rNgog lineage is especially, and exclusively, known for its tantric transmissions, even though individual members, like most educated Tibetan religious masters, were also learned in exoteric teachings. The transmissions associated with the rNgog will be presented in Chapter I.2. These teachings are known through various collections that are introduced in this section.

The oldest group of texts, called the "ancient rNgog maṇḍalas" (*rngog dkyil rnying ma*) by Kong sprul,[159] is represented by the NKCK and NKSB, that is to say mostly from volumes found in the gNas bcu lha khang (part I.1.4.1). The NKCK is composed of commentaries, key-instructions, initiation and practice rituals related to the traditions imported into Tibet by Mar pa and transmitted to rNgog Chos rdor, Mes ston, mTshur ston and their respective lineages, generally called the "exegesis lineage" (*bshad brgyud*), as opposed to Mi la ras pa's "practice lineage" (*sgrub brgyud*). It is because the rNgog pa bka' brgyud, or more aptly Mar rngog bka' brgyud, lineage was the most long-lasting and distinctive that the collection was given their name (*rngog chos skor*), but the NKCK and NKSB do not only contain rNgog transmissions.

As far as the name of the rNgog transmission is concerned, although it is especially associated with seven maṇḍalas and the protector Dud sol ma, it is generically called the "rNgog teaching" (*rngog chos*) in the *Rosaries* and it is likely that the rNgog themselves did not have a set idea of a specific group of seven transmissions. This is evidenced by the fact that there are more than seven transmissions mentioned in the *Rosaries*, and that the lineages are not all identical. Some, for instance the *Catuṣpīṭhatantra* line, were on the verge of extinction in Byang chub dpal's time.[160] Others, for instance the gSang ldan tradition of the *Nāmasaṃgīti* and the *Pañjara*, see their line exiting and re-entering the rNgog family at some point.[161] This means that each transmission was seen individually, and all transmissions were not granted as a whole, as could be the case later when empowerments contained in whole collections such as the KGND were transmitted together.

A second group of texts is made up of individual works on the rNgog tradition found in collection works of authors who were holders of these traditions. There was indeed a change in the family line in the 15th century. In less than a century, although rNgog family members and monks of sPre'u zhing continued to practice and transmit the rNgog maṇḍalas in the gZhung valley, the rNgog traditions were increasingly practiced outside of the family. Many of the transmissions now available derive from lineages that were preserved outside of the

---

[159] See below in the part on the KGND.

[160] BA, 412.

[161] See lineages in ST1 and ST2, translation in Appendix 2.

rNgog family after rNgog Byang chub dpal. This last important seat-holder of sPre'u zhing chose the second rGyal dbang 'brug chen, Kun dga' dpal 'byor, as the next holder of his religious lineage, which then continued in the 'Brug pa lineage and was especially expounded by the 4th 'Brug chen, Padma dkar po. He also imparted his teachings to 'Gos Lo tsā ba and Lo chen bSod nams rgya mtsho, who became the root masters of the 4th Zhwa dmar. This high Karma bka' brgyud hierarch was a prolific and successful master, who had a special link with Mar pa and the rNgog, hence was instrumental in the transmission of the Mar rNgog tradition to later generations, especially in the Kaṃ tshang and 'Bri gung bKa' brgyud orders. The complete works of masters such as the 4th Zhwa dmar, Padma dkar po and Tāranātha thus contain important rituals and commentaries associated with the rNgog maṇḍalas (see Chapters II.4 and II.5 for the lineages of these masters).

Aside from these collections, there are also texts authored within the rNgog lineage that were preserved in collections derived from the transmission of the 4th Zhwa dmar, for example in the *Phyag chen rgya gzhung* and the *'Bri gung bka' brgyud chos mdzod chen mo* (part I.1.4.2).

The last phase in the evolution of the lineage was the compilation of the KGND in the mid-19th century. Kong sprul Blo gros mtha' yas made special efforts to receive the transmissions coming from Mar pa, he composed new and convenient rituals, and compiled existing writings. His collection revived the transmission, which had by then become very rare, and ensured its continuation until today (see section I.1.4.3.).

1.4.1. The *rNgog chos skor phyogs bsgrigs* (NKCK) and the *rNgog slob brgyud dang bcas pa'i gsung 'bum* (NKSB)[162]

The origin and recent history of the texts constituting the NKCK and NKSB have been described above. As argued, 98 % of the texts included in the NKCK and 63 % of those in the NKSB come from the gNas bcu lha khang. Although the size of the folios, the number of line per page, the handwriting, etc. of the individual manuscripts varies in the originals, the print in the NKCK is a standardized, black and white, 8 x 42 cm reproduction, which might give the impression of a homogeneous collection. The diversity in handwriting, number of lines, size, etc., show the composite character of the collection, which was probably conserved in various libraries before its incorporation in the gNas bcu lha khang. Despite the diversity of the manuscripts, which to some extent hinders the ascertainment of their possible origin, the editors of the dPal brtsegs zhib 'jug khang created a coherent collection covering the various iterations of Mar pa's exegetical tradition.

They ordered the works chronologically and thematically. The first seven out of ten volumes of the NKCK (fourteen out of thirty-four of the NKSB) are writings by members of the rNgog family or by disciples following their tradition. rNgog mDo sde (known by the name Zhe sdang rdo rje in his writings) was the most prolific author in the lineage with two and a half

[162] See Appendix 4 for a chart of all titles as in NKSB, with the author, correspondances in NKCK, DC, KGND and DK-DZO.

volumes spanning the rNgog traditions, from commentaries on the *Hevajratantra* and *Vajrapañjaratantra* to rituals on the *Nāmasaṃgīti*. It is notable that he authored summaries (*bsdus don*) on all the main tantras he held (*Hevajra*, *Catuṣpīṭha*, *Mahāmāyā*, and *Nāmasaṃgīti*), as well as most *sādhana*s for the empowerment and practice of these tantras. His commentaries and *sādhana*s set the style of the lineage. This style comes from Mar pa and rNgog Chos rdor's instructions that open the collection but are much less structured than later works. In many cases, the works attributed to mDo sde seem to be the earliest written traces of any given tradition, and it is likely that it was at this time that Mar pa's instructions were put to writing more systematically. Despite authorship being attributed to him, the texts themselves often have invocations to masters much later than mDo sde, generally until Byang chub dpal. This indicates that mDo sde was the initiator of the lineage style, which was then taken up and preserved by his heirs. One thus finds many iterations by Thogs med grags, Chos kyi rgyal mtshan, Rin chen dpal bzang po, etc., which either continue, enlarge or comment on the work of their predecessor—a practice quite common in Tibetan scholarship.

It is important to note that only commentaries and *sādhana*s associated with the creation phase of the highest yoga tantras are included in the NKCK and in the DC.[163] There are in the NKSB several texts associated with Mar pa and Chos rdor's key instructions on the perfection phase, but they come from other sources, especially the DK-DZO. Although there are evidences of written traces of Mar pa's oral instructions in the early phase of the tradition, it is likely that, like in other traditions, these key-instructions were kept secret and did not spread widely until a later time.[164] The same can be said of instructions and rites associated with the protector Dud sol ma, as very few seem to have been preserved in the gNas bcu lha khang and texts in the NKSB come from the KGND.

One can note as well that mDo sde authored two commentaries on the *Saṃputatantra*, which was not part of the Mar rNgog tradition and had just been received from Rwa Lo tsā ba.[165] It is possible that it was part of an attempt to add legitimacy to his *Hevajra* transmission. In the Sa skya tradition, it is considered that there are two explanatory tantras on the *Hevajratantra*, namely the *Vajrapañjaratantra* and the *Saṃputatantra*.[166] The former is specific to the *Hevajratantra* while the latter is common to the *Hevajra*- and *Cakrasaṃvaratantra*. Several

---

[163] One notable exception is *Maitripa's Nine Instructions* (*mnga' bdag me tri ba'i dgu dgu phrugs*), NKCK, 1: 273-315, which deals with the topic of the six doctrines (see Chapter I.2 for details). It is possible that more key instructions on the perfection phase are in the DC (or in the gNas bcu lha khang) but have not been spotted because of their size and general lack of identifying title and/or author.

[164] Examples are the notes on the six doctrines concealed in a felt bag that Chos rdor is said to bequeath his son (see section II.3.1), and Mar pa's "concealed" instructions on the six doctrines in Sras mkhar (see Ducher 2016b). These fifteen scrolls were discovered by the treasure revealer Gu ru Chos dbang (1212-1270) in the walls of Sras mkhar and spread under the short name *Sras mkhar ma*. Given the style and content of the scrolls, they cannot have been created by Gu ru Chos dbang and are likely to be from the pen of Mar pa (or attendants). This shows that there were written notes on these secret oral instructions on the perfection phase but that they did not spread widely. The seven volumes of MPSB should be analyzed in a similar fashion in order to trace the origin of its texts, which have a higher proportion of instructions on the perfection phase than the NKCK.

[165] NKSB, 2: 171-287. See section II.3.2.

[166] Sobisch 2007.

of mDo sde's descendants' writings are similarly commentaries or ritual associated with transmissions having newly entered the lineage.

Among mDo sde's descendants, the ones known to have composed commentaries and rituals are Thogs med grags, followed by rGyal tsha Ra mo, rGyal tsha rDor seng and their heir Rin chen rgyal po and Rin chen dpal, as well as gTsang tsha Kun dga' rdo rje and his heirs Seng ge sgra, Rin chen bzang po and Chos kyi rgyal mtshan.[167] Byang chub dpal did not author any other text than ST2, which might be pseudepigraph. Not all of the texts alluded to in the *Rosaries* are extant in either the NKCK and NKSB, although some that were lacking in NKCK appear in NKSB, which shows that some manuscripts were located by the publishers in the interval. Among these authors, the most prolific was mDo sde's son Thogs med grags. He enlarged several of his father's commentaries by adding notes (*mchan*) to them and prepared several rites associated with the rNgog maṇḍalas. Not all of his work is preserved in the NKCK/NKSB.

Finally, the case of Rin chen bzang po needs some clarification. This master, the third abbot of sPre'u zhing, is said in the *Rosaries* to be the author of several texts on *Pañjara*, *Mahāmāyā* and *gSang ldan* as well as of a biography of Mar pa. The responsibility of one Rin chen *dpal* bzang po is mentioned in the colophons of a few texts in the NKSB and it is tempting to consider that these works were composed by Rin chen bzang po. These texts, in the end of vol. 10 and in vol. 11 of the NKSB do not figure in NKCK, and are also absent from the DC. There is a collection of texts attributed to rNgog gzhung pa Rin chen dpal bzang in the Potala Catalog,[168] and it is likely that dPal brtsegs obtained a copy of these Potala manuscripts only after the NKCK edition was released. It is difficult to check the transcription of the colophons without the photographic reproduction of the originals, but given the overall reliability of the rest of the NKSB collection, we can assume that the transcription of these texts is correct. This collection deals with *Pañjara* (one text),[169] *Catuṣpīṭha* (four texts),[170] *Mahāmāyā* (one text),[171] *Vajravalī* (two texts)[172] and *Hevajra* (one text),[173] topics which only partially cover the ones composed by Rin chen bzang po, while adding works on *Catuṣpīṭha*, *Vajravalī* and *Hevajra*. The colophons state that these texts were compiled by rNgog gZhung pa Rin chen dpal bzang po in the solitary place (*dben gnas*) of Brag dmar chos 'khor gling. That hermitage is not known from any other source, and it is strange, if Rin chen bzang po is the author, that he should write them elsewhere than sPre'u zhing, which was at the time a bustling institution for which he greatly laboured. Further, one finds within the *Pañjara*

---

[167] ST1, 20-21; ST2, 45-47.

[168] Potala Catalog, 118-119.

[169] NKSB, 10: 235-292: *'Jam dpal rigs bsdus pa'i sgo nas ngan song thams cad sbyong ba'i dkyil 'khor gyi cho ga nyi ma'i 'od zer*.

[170] *Ibid.* 11: 1-71: *dPal ldan bzhi pa'i dkyil 'khor gyi cho ga*; 11: 72-11: *dPal ldan bzhi pa'i rnal 'byor nam mkha'i mngon rtogs*; 11: 112-118: *dPal ldan bzhi pa'i dkyil 'khor gyi gegs sel ba'i stang stabs kyi rim pa*; NKSB, 11: 119-187: *dPal ldan bzhi pa'i zhi ba dang rgyas pa'i sbyin bsreg gi cho ga*.

[171] NKSB, 11: 188: *dPal sgyu 'phrul chen mo'i sgrub thabs*.

[172] NKSB, 11: 310: *Phreng ba'i dka' 'grel*; NKSB, 11: 320: *dPal rdo rje phreng ba'i thig gi dka' 'grel*.

[173] NKSB, 11: 208: *dPal dgyes pa rdo rje'i mngon par rtogs pa.*

empowerment ritual verses of homage that run until rNgog Byang chub dpal.[174] For all these reasons, it appears that the author is not the abbot Rin chen bzang po, but Sang Rin's son, known as Rin chen dpal bzang po, who lived during the abbacy of Byang chub dpal (1360-1446)(see section II.3.4.8). As he belonged to a branch of the main gTsang tsha line, it is likely that he lived in a house distinct from sPre'u zhing. A further indication to a late date of composition is the fact that the colophon to the *Pañjaratantra* empowerment ritual states that the author relied on instructions by Rin chen dpal zhe sdang rdo rje (?) and rNgog gZhung pa rDo rje rin chen. The latter may be Byang chub dpal's first son. Hence, it is reasonable to consider that the texts attributed to Rin chen bzang po in the NKSB were actually authored several generations later by Rin chen dpal bzang po. The abbot Rin chen bzang po's works, especially his hagiography of Mar pa, remain unavailable.

Volumes 6 and 7 of the NKCK (vols. 15-18 of NKSB) contain the works of rTsags Dar ma rgyal po and 'Gar ston bKra shis dbang phyug, who are considered mDo sde's two main disciples. rTsags Dar ma rgyal po figures in the rNgog lineage of gSang ldan and in the lineage of *Catuṣpīṭha* of several records of teachings received,[175] in both cases as a disciple of mDo sde. He authored three commentaries on the *Hevajratantra* and one on the *gSang ldan* tradition of the *Nāmasaṃgīti*, which are quite voluminous and played an important role in the tradition (section II.3.2.6.1). 'Gar (mGar) ston bKra shis dbang phyug hailed from the powerful mGar clan. His name does not appear in any of the lineages of the rNgog tradition, but he authored commentaries on *Hevajra*[176] and *Mahāmāyā*,[177] and requested mDo sde to write an important commentary on *gSang ldan* (section II.3.2.6.2).[178] The *Mahāmāyātantra* commentary was written in the rGyal thang Temple of Yar klung, where rTsags' *gSang ldan* commentary was emended by a Shes rab nam mkha'. Although these two texts demonstrate different handwriting and may not be by the same scribe, there are many manuscripts whose handwriting, size, etc., are very close to the gSang ldan manuscript. It is therefore possible that a sizeable quantity of the collection comes from this place in the Yar klung valley.

A long commentary on *Hevajra* preserved in the NKCK (vol. 7) and NKSB (vol. 20)[179] represents the lineage held by yet another disciple of mDo sde's, sNgo tsha Chos sku, who came from southern gTsang (see section II.3.2.6.3). sNgo tsha Chos sku held a familial lineage that continued for several generations and figures in some lineages of *Mahāmāyā* and *Catuṣpīṭha*.[180] According to its colophon, the text was composed on the basis of rNgog mDo sde's instructions by sNgo tsha Chos sku, and was completed in rNgog Byang chub dpal's time (15th century), in sPre'u zhing, by a monk called Zhang rDo rje dbang phyug. It is noteworthy that this text is the only one in the NKCK to contain a xylographic image of rNgog mDo sde (NKCK, 7:92, see the opening of the present dissertation).

---

[174] NKSB, 10: 238-240.

[175] *Gong dkar gsan yig*, 416-417; *Ngor chen thob yig*, 326; DL5 *thob yig*, 4: 632.

[176] *dPal dgyes pa rdo rje'i bshad 'bum nor bu sgron me*, NKSB, 17.

[177] *Ma hā ma ya'i rgyud kyi 'grel pa*, NKSB, 18: 1-82.

[178] *'Jam dpal gyi mtshan yang dag par brjod pa'i 'grel pa*, NKSB, 7.

[179] *sNying po kye'i rdo rje rin po che'i rgyan dang 'dra ba'i bshad pa*, NKCK, 7: 91-289; colophon p. 287.

[180] Bu ston *gSan yig*, 56; KGNDdkar chag, 32; *Gong dkar gsan yig*, 414.

In the second half of volume 7 and the beginning of volume 8 of the NKCK (NKSB, vol. 21 and 22) there are several texts authored by Tre bo rDo rje mgon po. He was known as a great scholar, conversant in *Guhyasamāja*, *Cakrasaṃvara*, *Pañjāra* and *Hevajra*. He was a disciple of rGya Nam mkha' dbang phyug, himself a holder of the "Ram Tradition" of *Hevajra* coming from Ram rDo rje grags and of Mar pa do pa's tradition of *Cakrasaṃvara*.[181] The Ram Tradition was related to the rNgog tradition of *Hevajra*, but with its own distinctive style. The Ram tradition of *Hevajra* is also represented in the NKCK by the commentaries of lCe'i *ban de* dben tsa and Shes rab thar dan (NKCK, vol. 8; NKSB, vols. 23 and 24). According to the latter, who explicitely traces his tradition to Ram, the monk dBen tsa of the lCe family was one of Ram's four main disciples (see section II.3.1.5).[182]

Another tradition coming from Mar pa that is represented in the collection is that of *Hevajra* passing by Mes ston tshon po (see section II.1.3.3.), one of Mar pa's four main disciples (NKCK, vol. 8 and 9; NKSB vol. 25 and 26). This tradition is represented by the commentary on the *Hevajratantra* by Cher ston bSod nams bzang po, who states in his commentary that he follows the teaching of Glan ston gSal 'od, who held the lineages of both Mes and rNgog gZhung pa.[183] It is also followed by sKyas *bande* rGya mtsho grags, who identifies himself as Zhang Ye shes snying po's disciple, who was separated from Mes ston by only one person.[184] rGya mtsho grags also authored a commentary on *Cakrasaṃvara* according to Mar pa Do pa Chos kyi dbang phyug's tradition.[185] This tradition, although completely unrelated to Mar pa or the rNgog, is also represented in vols. 32 and 33 of the NKSB, along with Mar pa do pa's tradition of *Hevajra*.

Another important transmission represented in the NKCK is Mar pa's tradition of *Guhyasamāja* passing through mTshur ston (section II.1.3.2). Although *Guhyasamāja* was quite important for Mar pa, and the source of most of his worries for domination of the 11th-century Tibetan religious field,[186] rNgog Chos rdor did not receive it. Mar pa's tradition of *Guhyasamāja* was mostly spread by mTshur ston dbang nge. One of his three main disciples, Khams pa Ro mnyam rdo rje, authored a large commentary expounding it (NKCK, vol. 10; NKSB, vol. 28). There are also three short texts representing mTshur ston's iteration of Mar pa's teaching in vol. 2 of the NKSB.

---

[181] BA, 407-408 for a presentation of the Ram tradition and the relationship of the Rams with the rNgog. See also BA, 388 which states that Tre bo mgon po's line of interpretation of Hevajra is according to the Ram Tradition.

[182] NKSB, 24: 23. The historical part of the commentaries is on pp. 11-23. He mentions shortly the rNgog tradition, though it follows the Ram tradition. Lce's commentary has an historical part (NKSB, 23: 9-12) which is quite different from that of the rNgog.

[183] NKSB, 25: 303. The lineage on pp. 6-9 stops after Mar pa.

[184] NKSB, 26: 3: Lineage: Nāropa → Mar pa lHo brag pa → Mes ston tshon po → Zhang bSod nams mkhar → Zhang Ye shes snying po → sKyas Ban de rGya mtsho'i grags. See also *Deb sngon*, 490.

[185] NKSB, vol. 26, 225-333. The lineage is given 230: Nāropa → Pham thing pa → Mar pa [Do pa] Chos kyi dbang phyug → dPal bDe mchog rdo rje → sKyas Ban de rGya mtsho'i grags. (Mar pa Do pa also received the transmission from Sumatikīrti who was the disciple of Manakaśri, one of Nāropa's four main disciples).

[186] Ducher 2017, 35. For instance, Mar pa's biographies often mention his fear that Nāropa's disciple Ākarasiddhi may spread Guhyasamāja in Tibet before himself does and thus prevent his tradition from spreading.

Volume 9 of the NKCK includes a commentary on the *Pañjaratantra* authored by the monk dBang phyug rin chen. Although he relates his tradition to Nāropa, Maitripa and Śāntibhadra, hence most probably to Mar pa, Mar pa and his disciples are not directly mentioned.

Thus, in short, the NKCK includes several transmissions associated with Mar pa's exegetical lineage according to three of his disciples, rNgog Chos rdor, Mes ston tshon po and mTshur ston dbang nge, as well as the Ram tradition of *Hevajra*, which was related to both Mar pa and the rNgog, although quite distinct in its commentarial style. The reason for their inclusion in the slightly misleadingly titled "Compilation of rNgog Cycles" (*rngog chos skor phyogs bsgrigs*) is that they were stored in the gNas bcu lha khang. More detail about the life and teachings of these masters are found in the section on Mar pa and his disciples (II.1.3), and on the rNgog and their disciples (II.3).

The last volumes of the NKSB (29-34) contain transmissions not directly related to Mar pa. The reason for their inclusion is likely the same, namely that these texts were stored in the gNas bcu lha khang. Although an attempt has been made in this dissertation to contextualize all traditions coming from Mar pa, no further account than the following is provided with regards to these unrelated traditions.[187]

First, volumes 30 and 31 of the NKSB contain some of the writings of gSer sdings pa gZhon nu 'od,[188] who held Mar pa's tradition of *Guhyasamāja*, along with several others. Then, volumes 32 and 33 feature Mar pa do pa's writings on *Cakrasaṃvara* and *Hevajra*. The reason why he is included is probably his famous encounter with Mar pa while the latter was returning from his last journey to India and informed Do pa of Nāropa's unavailability to disciples at large.[189] It is possible also that his family name did play a role in the publisher's inclusion of his writings in the "Complete Works of the rNgog and their Disciples' Lineages" (*rngog slob brgyud dang bcas pa'i gsung 'bum*). This too might be the reason for the inclusion of an important commentary on the *Guhyasamājatantra* according to the rNgog/rDog Tradition. As argued in section II.2.2.1, there was in the early centuries of the second spread of Buddhism in Tibet an important family lineage called rNgog or rDog. The name is not quite settled, although rDog seems preferable. They held 'Gos Khug pa lhas bstas's transmission of *Guhyasamāja*. Although the name "rNgog Tradition of the *Guhyasamāja*" does warrant some amount of confusion, it is neither related to Mar pa nor to the rNgog from gZhung. The publication of this commentary, however, is a welcome addition to the growing scholarship on *Guhyasamāja*.[190]

---

[187] Exception can be made of a history of the lCe family based in Sri'u gcung in gTsang. This text is probably included in the NKSB, 23: 251-313, on the ground that an important member of that family, gTsang sMra seng, met rNgog mDo sde and his grandson rNgog rGyal tsha rDor seng and received most of their transmission. See section II.3.2.6 for mDo sde's disciples and II.2.2. for the rDog tradition of *Guhyasamāja*.

[188] See his biography in BA, 420-422.

[189] BA, 383 and Ducher 2017, 225.

[190] See the writing e.g. of Yael Bentor, Christian Wedemeyer and the "[Robert] Thurman Tradition of the *Guhyasamāja*" (the *thur man a ri 'phags lugs*?). Although the study of the *Guhyasamājatantra* has until now been limited to a large extent to Tsong kha pa's interpretation of the tantra, the NKSB contains two valuable

1.4.2. ’Bri gung bka’ brgyud collections containing texts from the rNgog tradition

The manuscripts related to Mar pa’s tantric traditions stored in the gNas bcu lha khang, if we are to rely on the reflection provided by the NKCK and the DC, are mostly tantric manuals related to the creation phase (*bskyed rim*), that is to say to the creation in the meditationer’s mind of the maṇḍala of the deities expounded in a tantra. The highest yoga tantras, however, do not only contain a creation phase, but also a perfection phase (*rdzogs rim*), and Mar pa’s tantric traditions are especially renowned for the profundity and centrality of his Indian gurus’ oral instructions (*gdams ngag* or *man ngag*) on these practices. The NKCK does not comprise any instructions on those. The NKSB, however, includes several texts on this topic mostly excerpted from two volumes of a *Mar pa’ bka’ ’bum* initially published in volumes 5 and 6 of the *’Bri gung bka’ brgyud chos mdzod chen mo* (DK-DZO), which is itself derived, as far as those texts are concerned, from the 16th century collection called *Phyag chen rgya gzhung*, and from texts who had been stored in the gNas bcu lha khang.

The Phyag chen rgya gzhung

There are several collections known under the title “Indian Mahāmudrā Texts” (*Phyag chen rgya gzhung*). One is a three-volume collection published by the 14th Zhwa dmar pa (1954-2014) in Delhi in 1996 as a reprint of a dPal spungs xylograph.[191] Another has six books in its modern print and was compiled by the 7th Karma pa Chos grags rgya mtsho.[192] The third, the one that is referred to in the present study, is a 819-page volume said to have been reproduced directly from a cursive manuscript from ’Bri gung thil.[193] The volume does not have a general colophon; the texts are numbered independently in the traditional way (on the recto of each folio, in the left margin) but the handwriting and style of the title pages indicate that the copy is by the same scribe, although it may have been disparate or in another order in previous versions. The manuscript itself is difficult to date and may be quite late, but its content indicates that it was compiled in the first half of the 16th century: it contains the instructions of Tilopa, Nāropa and Maitripa, generally on mahāmudrā and often translated by Mar pa, as well as many short texts on mahāmudrā and the six doctrines, either unidentified or by the Third Karmapa Rang byung rdo rje (1284-1339), the Second Zhwa dmar bKa’ spyod dbang po (1350-1405) and the 4th Zhwa dmar Chos grags ye shes (1453-1524). There are also several texts by the rNgog or commented upon by them, and it seems obvious that the texts were

---

commentaries that should contribute to a larger understanding of the transmission of the *Guhyasamājatantra* in Tibet: vol. 28 for Mar pa’s tradition and vol. 34 for the rDog Tradition.

[191] *Nges don phyag rgya chen po’i khrid mdzod*. [New Delhi]: [rNam par rgyal ba dpal zhwa dmar ba’i chos sde], [1997] (W23447). The first three volumes are a reproduction of the *Phyag rgya chen po’i rgya gzhung* printed in dPal spungs dgon (W3CN636). See Mathes 2011.

[192] Chos grags rgya mtsho: *Nges don phyag chen rgya gzhung dang bod gzhung*. 11 vols. Chengdu: Si khron mi rigs dpe skrun khang, 2009 (W1KG12589). This may or may not be the same as the previous one.

[193] See W21554 on www.tbrc.org, where an outline is available. Most colophons and titles are also included in Dan Martin’s *Tibskrit*. This manuscript from ’Bri gung thil was republished in Kangra (India) by D. Tsondu Senge in 1985 and was therefore not among the ones stored in ’Bras spungs.

initially redacted within the family lineage, or by direct disciples.[194] Some of these texts in *dbu med* were reproduced in *dbu can* in the *'Bri gung bka' brgyud chos mdzod chen mo* (DK-DZO). Some of the ones related to the rNgog in turn found their way to the NKSB.

The 'Bri gung bka' brgyud chos mdzod chen mo

This collection contains 150 volumes of the 'Bri gung bKa' brgyud lineage and associated transmissions, together with a one-volume catalogue (vol. 151).[195] The modern edition was published by A mgon Rin po che in Lha sa in 2004. It does not seem to be modeled on an older edition, but it is clear that it contains much older material that was unavailable until that point. An example is the *sGam po bka' 'bum* in four volumes (vol. 11-14): it is a copy of the manuscript edition of the *Dwags po bka' 'bum* that precedes the 1520 xylographic edition, and is therefore a precious testimony to what the collection looked like before the very extensive editing work accomplished under the direction of the 16th Dwags lha sgam po abbot.[196] Several from these "Rare Texts from Tibet" have been the object of studies and reprints by Per K Sørensen,[197] and I made use in my Master's research on Mar pa's biographies of the two volumes of *Mar pa bka' 'bum* (vol. 5-6). They contain, among other things, a biography of the translator (tentatively) attributed to rNgog mDo sde, as well as a *Mar pa mgur 'bum* containing editions of the songs that predate the famous early 16th-century version by gTsang smyon He ru ka.[198] As mentioned in the last paragraph, several, but not all of the texts related to the rNgog come from the *Phyag chen rgya gzhung*, itself said to have been initially preserved in 'Bri gung Monastery. According to Che tshang Rinpoche, many volumes are reproductions of texts that were contained in the gNas bcu lha khang and may initially come from 'Bri gung mthil. During the 1990s, he asked someone working inside the monastery to copy for him of a *Hevajratantra* commentary composed by Kun dga' rin chen, and he commissioned the acquisition of a photocopy machine inside the compounds.[199] It was

---

[194] For instance, the *Ma hā mu dra'i tshig bsdus pa dpal nā ro pas mdzad pa*, pp. 243-246, has interlinear notes written by a rNgog ston Ayurbodhi (Tshe'i byang chub?), possibly Byang chub dpal. The lineage of the *Mai tre ba'i man ngag zab mo lam dgu phrugs*, p. 319, reads *'di'i brgyud pa ni/ gu ru dharma dhwo tsha* [Chos kyi rgyal mtshan] *yan chos drug dang 'thun/ des bla ma sang yon pa/ de bla ma ya???? bazra/ des bdag la'o*. rNgog Sangs rgyas yon tan was Byang chub dpal's master and great-uncle, so again Byang chub dpal may be the one referred to here though the name is different. Two texts (*sByangs te 'pho ba*, pp. 403-412 and *bDag med ma'i byin rlabs*, pp. 491-494) are composed by rNgog Zhe sdang rdo rje, and several other text mention rNgog Chos rdor as the one having initially received the transmission from Mar pa.

[195] See Sørensen 2007, 319-404, for an index of each volume. It is important to note that in this book the volumes are not presented in the correct order. The first thirty volumes (*ka* to *a*) should be followed by *ki* to *i*, *ku* to *u*, etc., but instead after *a* come *ki*, *ku*, *ke* and *ko*, then *khi*, etc., thus shuffling all the volumes. We may also refer to the index volume of the collection (*'Bri gung bka' brgyud chos mdzod chen mo*, vol. 151) which introduces the contents of each volume, and to the outline provided on ww.tbrc.org (reference W00JW501203)

[196] See Kragh 2013, especially p. 372, for an assessment of this copy

[197] Sørensen 2007 is an edition with introduction to seven historical texts from this collection, collated after Sørensen was hosted by A mgon Rin po che in lHa sa during the 2000s (see Acknowledgment).

[198] "rJe mar pa'i rnam thar," In DK-DZO, 5: 167–188; "Mar pa'i mgur chen nyer lnga." In DK-DZO, 5: 430-482. See Ducher 2017.

[199] Personal conversation, 26.06.2017. Later on, the machine was not allowed in the precincts of 'Bras spungs.

probably several years later that A mgon Rinpoche managed to get these texts outside and have them copied in the DK-DZO. The location of the originals is not known.

Despite its crucial importance for the history of the bKa' brgyud orders, the sources of the DK-DZO and the circumstances of its publication in 2004 remain unclear. Considering the collection's contribution (especially the *Mar pa'i bka' 'bum*) to the recent revelation of rNgog materials, it is necessary to examine why such old and elsewhere extinct rNgog traditions have been preserved within the 'Bri gung lineage.[200]

According to the present Che tshang Rin po che (b. 1946), quoted by Klaus-Dieter Mathes,[201] the collection was initially compiled under the direction of the 16th 'Bri gung abbot Kun dga' rin chen (1474-1527),[202] considered the last throne-holder following a purely bKa' brgyud tradition and an incarnation of the 'Bri gung founder, 'Jig rten sum mgon. It is probably an exaggeration to state that Kun dga' rin chen compiled the DK-DZO that we know today, as it contains works of much later authors, but it seems reasonable to hold him responsible for the initial compilation of a large amount of texts later preserved in the 'Bri gung lineage. This claim is corroborated by the *'Bri gung gdan rabs*, which describes the important assets allotted to the compilation of large canonical collections in the 1510s in 'Bri gung.[203]

If he indeed played a role in the inclusion in the *Phyag chen rgya gzhung* and in the DK-DZO of texts initially preserved and/or copied in sPre'u zhing, how did he get them? The probable source of these materials is the 4th Zhwa dmar, Chos grags ye shes (1453-1524), who himself had a close bond with the rNgog tradition, which he received from his two masters, 'Gos Lo tsā ba and Lo chen bSod nams rgya mtsho, both direct disciples of rNgog Byang chub dpal (see Chapter II.4). Kun dga' rin chen and his younger brother and successor on the seat of 'Bri gung mthil Monastery, Rin chen phun tshogs (1509-1557), were both disciples of the 4th

---

[200] Aside from Mar pa's biography attributed to mDo sde (but with no explicit mention of his responsibility), there are several indications of the fact that these texts were transmitted in the rNgog lineage: e.g. vol. 5: 418: *bla ma mar pa'i gsung la rngog gis zin bris*; vol. 6: 60, *bla ma'i yab* ("the master's father") is identified as being rNgog Chos rdor*;* vol. 6: 91: *slob dpon zhe sdang rdo rjes mdzad pa rdzogs so;* vol. 6: 116: lineage until rNgog Byang chub dpal*;* vol. 6: 183: *sangs rgyas gnyis pa lta bu'i bla ma rin poche che'i rngog gis;* vol. 6: 199: *rngog chung ston pa bdag*; vol. 6: 244: *bla ma chen po zhe sdang rdo rjes mdzad pa'o*, etc. In general, although many texts in volume 6 do not have any indication of authorship, it would seem that pp. 1-283 consists in a manual on the practice of the six doctrines within the rNgog tradition, that is to say merging and transference (see section I.2.2.1.). Several other texts of the DK-DZO can be related to the 4th Zhwa dmar, especially his commentary on the Single Intention (*dgongs gcig*) in vol. 83.

[201] Mathes 2009, 91.

[202] See the list of abbots on the official website: http: //www.drikung.org/drikung-kagyu-lineage/list-of-lineage-holders (accessed May 22, 2017), which corresponds to the *'Bri gung gdan rabs*, or in Gene Smith's Green Book on *Materials on the 'Bri-gung-pa Tradition* (W1KG9253, p. 128 of the pdf). Sørensen and Hazod 2007, 726-727 give him as the 15th throne-holder.

[203] See *'Bri gung gdan rabs*, 173-174 and Sørensen and Hazod 2007, 726-727. Between 1511 and 1516, four-hundred scribes we gathered and made a copy of the *bKa' 'gyur, bstan'gyur* as well as writings of Tibetan masters. See also the official website of the 'Bri gung lineage, which states that during Kun dga' rin chen's tenancy, "The Kangyur and Tengyur were copied on indigo paper in gold and silver script, while two hundred scribes were involved in the production of the complete texts of the Drikung lineage" (http: //www.drikung.org/drikung-kagyu-lineage, accessed on May 22, 2017).

Zhwa dmar. It is stated in Kun dga' rin chen's biography that he and the 4th Zhwa dmar were invited together to Don yod rdo rje's court and that Kun dga' rin chen later invited the Karma bka' brgyud hierarch to 'Bri gung mthil.[204] Kun dga' rin chen's brother took the monastic ordination with the 4th Zhwa dmar in the Phag gru seat of gDan sa mthil in 1516, and later spent several years (1521-1524/5) in the Zhwa dmar monastery of Yangs pa can, where he received numerous transmissions.[205]

There are several lineages of *Hevajra* preserved in the KGND. One is considered to be the "pure rNgog Lineage" (*rngog brgyud kha rkyang*), as opposed to the Kaṃ tshang tradition that reached the Karma pas earlier on.[206] The former passed through all the rNgog and then goes out of the family to Lo chen bSod nams rgya mtsho, the 4th Zhwa dmar, Shes rab dpal ldan and 'Bri gung Rin chen phun thogs.[207] This lineage then descends all the way to the present Che tshang Rin po che.

Given the personal and prolonged relationship of Kun dga' rin chen and Rin chen phun tshogs with the 4th Zhwa dmar and the later bond formed between the 'Bri gung and Zhwa dmar

---

[204] *'Bri gung gdan rabs*, 168-170 and 174: the text describes two long encounters between Kun dga' rin chen and the 4th Zhwa dmar, first at Don yod rdo rje's court and in Tshe'u kha (Kun dga' rin chen's monastery in 'Bri gung). On both occasions, many exchanges of offerings and transmissions were made, and Kun dga' rin chen showed a great reverence to his master. On p. 166, it is stated that he received the seven maṇḍalas from the "Victorious Sun' (*rgyal ba rta bdun dbang po bya ba*), which may be a poetic way to refer to the Karma bka' brgyud hierarch.

[205] *'Bri gung gdan rabs*, 187-188: the text states: *lo bdun gyi bar yangs can nyid du bzhugs nas/ rje zhwa dmar bzhi pa dang/ yongs 'dzin du ma bsten cing/ gsang sngags kyi dbang rjes gnang du ma dang/ karma zhwa dmar nag rim gyi bka' 'bum/ gzhan yang gdams pa'i chos mang du gsan*, "For seven years he stayed in Yangs [pa] can. The 4th Zhwa dmar and many other teachers gave him many empowerment and authorizations of the Secret Mantrayāna. He also studied the writings of the successive holders of the Black and Red Hat as well as many instructions." I'm wondering whether *lo bdun gyi bar* should not be emended as the 4th Zhwa dmar passed away in 1524, the year when Rin chen phun tshogs is said to go back to 'Bri gung (in his sixteenth year). However that may be, it means that Rin chen phun tshogs spent several years in Yangs pa can. As the future throne-holder of 'Bri gung and given the good relationship between the two orders, it is very likely that he was granted the most important transmissions, included the seven maṇḍalas, even though they are not mentioned. Rin chen phun tshogs later imported many rNying ma teachings in the 'Bri gung lineage and became a treasure-revealer, establishing his own seat of Yangs ri sgar in 1534, when he was demoted from the throne of 'Bri gung (see *'Bri gung gdan rabs*, 185-203, and Sørensen and Hazod 2007, 728-730).

[206] KGNDZ, 1: 21.

[207] In the *Hevajra* lineage outlined in the KGND, the second Yangs pa can abbot, Shes rab dpal ldan, figures between the 4th Zhwa dmar and Rin chen phun tshogs. He is refered to as *Yangs can pa'i mkhan rab dang po gnas brtan yan lag 'byung gyi rnam 'phrul snar thang pa shes rab dpal ldan* in the KGND, 1: 21, and his short lifestory figures in the *Zla ba chu shel gyi phreng ba*, vol 2: 117. He first studied bKa' gdams precepts in sNar thang and received initiations from Shakya mchog ldan and Glang thang pa. He then met the 4th Zhwa dmar pa, as well as many other masters, and later became a teacher and finally abbot of Yangs pa can. He was equally respected than Zhwa dmar pa and was considered an incarnation of Aṅgaja, one of the sixteen arhats. He took the regency after Zhwa dmar pa's passing. As Rin chen phun tshogs spent several years in the monastery in the end of the life of the 4th Zhwa dmar, Shes rab dpal ldan played a great role in Rin chen phun tshogs's integration of the *Hevajra* practice, reflected by his place in the transmission line.

incarnation lines,[208] it seems very likely that Kun dga' rin chen received texts on the rNgog tradition, perhaps coming from sPre'u zhing, from the 4th Zhwa dmar, and included them in the large collections he was building. One of the texts copied at the time may have been the *Phyag chen rgya gzhung*. It was reproduced, augmented by the writings of later 'Bri gung hierarchs and a mass of other texts likely stored in the gNas bcu lha khang, in the DK-DZO. Thus, the 'Bri gung lineage played a decisive role in the preservation of the rNgog tradition, even in one of its last avatars, the *bKa' brgyud sngags mdzod*. As shown below, Kong sprul received the transmission of the works the 4th Zhwa dmar lineage from Khra lebs Rin po che, himself a holder of the 'Bri gung lineage.

1.4.3. The *bKa' brgyud sngags mdzod* (KGND)

Another collection containing many texts related to the rNgog traditions and that is used in the present dissertation is the *bKa' brgyud sngags mdzod*, the "Treasury of bKa' brgyud Mantras" compiled by 'Jam mgon Kong sprul Blo gros mtha' yas in 1854. Kong sprul defines his work in the introductory title of the collection as the "golden teachings of the glorious Mar rngog bka' brgyud,"[209] which, at his time, were "weak like a stream in winter."[210] True to his aim of reviving the tradition, Kong sprul compiled a three-volume collection which can be considered as the apotheosis of the rNgog tradition, gathering in an unprecedented way the seven maṇḍalas together with other representative transmissions of Mar pa and of the highest yoga tantras in general. The aim of the present section is to present Kong sprul's sources, and especially the ones not introduced until now, the circumstances of composition of the collection, its various editions, its content and its legacy. The rNgog transmissions will be outlined in more detail in Chapter I.2.

'Jam mgon kong sprul blo gros mtha' yas (1813-1899) is one of the great polymaths of Tibet's 19th century, and the reader is referred to the many sources now available on his life.[211] According to Alexander Gardner, "he created one of the largest collections of writings, both edited writings and compositions, of any Tibetan scholar," and thus played an immense role in the revival of many traditions on the verge of extinction in the 19th century, and for the general vitality of Buddhism in Eastern Tibet in that period and until now. Even though he officially belonged to the Karma bka' brgyud order and was based in dPal spungs Monastery, he was a Ris med ("Nonsectarian") master, with writings related to most Tibetan traditions. He had two close friends, who were also colleagues, masters and disciples, in the persons of

---

[208] The 6th Zhwa dmar, Chos kyi dbang phyug (1584-1629), was the brother of the first Che tshang and Chung tshang incarnations, respectively 24 and 25th throne-holders. The two marked the transition from a family succession on the seat to an incarnation line.

[209] KGND, 1: 1: *dpal ldan mar rngog bka' brgyud kyi gser chos.*

[210] KGND, 1: 8.1.

[211] See e.g. Smith 2001, 235-272: "'Jam mgon Kong sprul and the Nonsectarian Movement." According to Kurtis Schaeffer (Smith 2001, 7), this is perhaps Gene Smith's most famous written work. One can also read Kong sprul's autobiography translated in Barron 2003, and the one composed online by Alexander Gardner: http: //treasuryoflives.org/biographies/view/Jamgon-Kongtrul-Lodro-Taye/4358 (accessed on May 24, 2007). Gardner is the author of a dissertation on "The Twenty-Five Great Sites of Khams: Religious Geography, Revelation, and Nonsectarianism in Nineteenth-Century Eastern Tibet."

the Sa skya (and Ris med) master ’Jam dbyang mkhyen brtse dbang po (1820-1892), who he met in 1840, and the rNying ma treasure-revealer mChog gyur gling pa (1829-1970), who he met in 1853. The three collaborated on many projects and treasure-revelations, and were known as a trio, *mKhyen Kong mChog sde gsum*.

Kong sprul’s legacy is called the *Five Treasuries* (*mdzod lnga*). They were compiled between the mid-1850s and the end of his life and span more than hundred volumes. The first compilation was the KGND, which is presented below. It was followed by the *Treasury of Precious Hidden Teachings* (*Rin chen gter mdzod*) containing more than hundred cycles of treasures and compiled between 1855 and the 1880s.[212] Then, between 1862 and 1864, he redacted the *Treasury of Knowledge* (*shes bya mdzod*) summing up all fields of knowledge of the Tibetan world.[213] Finally, in the last fifteen years of his life, he compiled the *Treasury of Precious Instructions* (*gDams ngag mdzod*) related to the eight lineages of practice.[214] A fifth collection, the *Expansive Treasury* (*rGya chen bka’ mdzod*) can be considered Kong sprul’s collected writings on various topics.[215]

The *Treasury of bKa’ brgyud Mantras* has not yet been the subject of any study, despite its importance for the bKa’ brgyud lineage. This dissertation aims at remedying the situation, as well as shedding light on its heart, the rNgog tradition, which is largely forgotten despite its centrality in the tantric apparatus of the bKa’ brgyud school. The collection contains manuals of initiation, rituals and explanations of the Mar rngog bka’ brgyud lineage, and represents the tantric legacy of Mar pa in Tibet.

Sources

Despite his virtuosity, Kong sprul did not, and could not, have worked in a literary vacuum. His collection largely relies on previous works that he either included untouched in the collection or reworked in order to make a more convenient tool for transmission and practice of the traditions in question. Kong sprul presents his sources in the introduction to the collection: first are Indian texts, the tantras themselves, as well as commentaries, *sādhana*s, *maṇḍalaviddhi*s, etc. composed by Indian masters and very often the sources of the ensuing traditions. Mar pa received them from either Nāropa or Maitripa. The traditions transmitted in

---

[212] See Schwieger 1990, 1995, 1999 and 2009 for a description of the content of the collection and Schwieger 2010 for a summary of these many years of cataloguing the *Rin chen gter mdzod*.

[213] The *Shes bya mdzod* is integrally translated into English by the Kalu Rinpoché Translation Group and published by Snow Lion between 1995 and 2013. I used particularly Kongtrül, Guarisco & McLeod 2005, Kongtrül & Harding 2007 and Kongtrül, Guarisco & McLeod 2008 for the present research, that is to say translation of parts of Book Six and Eight (out of ten) on the Buddhist tantras.

[214] See Kapstein 1995 and 2007 on “gDams-ngag: Tibetan Technologies of the Self.” The 18 volumes are currently being translated by scholars affiliated to the Tsadra Foundation (see the project page: http://dnz.tsadra.org/index.php/Main_Page, accessed on May 24, 2017, which contains all Tibetan texts in Unicode format). The introductory volume (Kongtrül & Barron 2013) is a general presentation of the “eight chariots of practice” (also available on the portal).

[215] Many texts from this collection have been independently translated but given the motley character of the collection (unlike the other four), no general study is available.

the Mar rNgog lineage are introduced in Part 1.2; the story of these Indian masters and of Mar pa is studied in Chapter II.1.

Secondly Kong sprul mentions the Tibetan works that precede him. In this category, he differentiates five stages of writings available to him and that he consulted in order to elaborate the KGND:

1) The earliest Tibetan texts such as the *mDo sbyar* and *Gur gyi srog shing* by Mar pa [commentaries on *Hevajra* and *Pañjara*]; the manuals composed by rNgog Zhe sdang rdo rje as well as his commentary on the *Two Segments* [i.e. the *Hevajratantra*, called] *Likeness of a Precious Ornament*; the *Collected [Works]* of mGar [bKra shis dbang phyug] and rTsags [Dar ma rgyal po, who were mDo sde's main disciples]; the "Old rNgog maṇḍalas," which are compilation of manuals by later rNgog such as Kun dga' rdo rje, Thogs med grags pa, Rin chen bzang po, and so on.[216]
2) The manuals composed by the Venerable Omniscient Rang byung rdo rje [3d Karmapa, 1284-1339] on the three—*Hevajra*, *Cakrasaṃvara* and *Guhyasamāja*—as well as on *Mahāmāyā*, and so on; and by his successors: the Venerable [mThong ba] Don ldan [the 6th Karmapa, 1416-1453]; the 7th [Karma pa, Chos grags rgya mtsho, 1454-1506]; [the 8th Karma pa] Mi bskyod rdo rje (1507-1554); the Great 'Jam dbyangs [Don grub 'od zer] from mTshur phu (14th-15th c),[217] and so on, that is to say the main Kaṃ tshang tradition, in which many manuals on most tantras of the Mar rNgog [tradition] were composed.[218]
3) The "Manuals on rNgog Maṇḍalas" composed by Khrims khang Lo chen bSod nams rgya mtsho. They provide outlines and clarify practices on the basis of the Old rNgog Maṇḍalas. Based on these, the manuals of the Lord sPyan snga [the 4th Zhwa dmar Chos

[216] KGND, 1: 6.2-4: *bod gzhung snga shos rje mar pa'i mdo sbyar/ gur gyi srog shing/ rngog zhe sdang rdo rje'i yig cha rnams dang/ brtag[s] gnyis 'grel pa rin chen rgyan 'dra/ mgar 'bum/ rtsags 'bum sogs kyi bshad rgyun dgongs pa gung bsdebs te/ rngog phyi ma kun dga' rdo rje/ thogs med grags pa/ rin chen bzang po sogs kyi yig cha phyogs bsdams rngog dkyil rnying ma dang/*

[217] He was a disciple of the 5th Karma pa bDe bzhin gshegs pa (1384-1415) and a master of Lo chen bSod nams rgya mtsho (Ehrhard 2002b, 45-46). He was the abbot of mTshur phu Monastery for 45 years and developed the mTshur phu tradition of astrology (http: //www.tibet-encyclopaedia.de/tshurphu-schule.html, accessed on May 24, 2017).

[218] KGND, 1: 6.4-5: *thams cad mkhyen pa rang byung zhabs kyis bde dgyes gsang gsum mā yā sogs kyi yig cha mdzad pa'i rjes 'brang/ don ldan zhabs/ rje bdun pa/ mi bskyod rdo rje/ mtshur phu 'jam dbyangs chen po sogs kyis mar rngog rgyud sde phal mo che'i yig cha ji snyed cig mdzad pa'i kaṁ tshang lugs gtso che ba dang/*

grags ye shes] have the wise vision endowed with the two forms of knowledge which thoroughly strains the stains of errors.[219]

4) The great Venerable Jo nang [Tāranātha, 1575-1634] cleaned the general hybridations and crossovers [which had crept in] the rNgog practices and composed manuals which purely and unmistakably expound the Indian root texts and Mar pa's interpretation.[220]
5) Lord Karma Chags med summarized thoroughly the extensive initiation texts which are set in for example the Old rNgog Maṇḍalas by unifying the self and front [generation stages], thus speeding up the empowerment.[221]

Although the empowerments and reading transmissions of the latter three are uninterrupted, I mainly took as a base the writings of the Lord sPyan snga [the 4th Zhwa dmar] and the Venerable Jo nang [Tāranātha], which are unmistaken as to the meaning and have a majestic blessing.[222]

The first phase is the rNgog tradition as it is conserved in the NKCK, excepting Rin chen bzang po's writings, which remain unavailable. It is not clear how much of these Kong sprul had at his disposal when he compiled the KGND, but he gives the impression that he had them, which means that the writings that have recently resurfaced from the gNas bcu lha khang were not the only ones surviving in the 19th century. The second phase is dispersed in the collected works of the Karma pas, and the rituals are largely available, though not as a specific collection. As for the third phase, although some miscellaneous works of Lo chen are available (W1CZ1099), his complete works, which seem to be present in the gNas bcu lha khang and are catalogued by bits in the DC, have not been published yet. The *gSung 'bum* of the 4th Zhwa dmar is available and contains several rituals and commentaries related to the rNgog traditions, as are those of Tāranātha and Karma Chags med. Among these, the manuals (*yig cha*), that is to say the cycles of texts containing everything necessary for the practice of a specific tantra—empowerment ritual, main *sādhana* and related rites, as well as commentaries and explanations—that were composed by the 4th Zhwa dmar and Tāranātha are considered the most appropriate by Kong sprul because they are charged with spiritual influence, have the appropriate length, are easy to use and without mistake. He therefore used those as a base, sometimes including the original documents, sometimes editing them, and thus compiled in

---

[219] *Ibid.*, 1: 6.5-6: *rngog dkyil rnying ma la gzhi byas nas sa bcad dang phyag len gsal bar phyes pa'i khrims khang lo chen bsod nams rgya mtshos mdzad pa'i rngog dkyil yig cha dang/ de la gzhi byas mkhyen gnyis ye shes kyi gzigs pas nor 'khrul gyi rnyogs pa shin tu bgrungs pa rje spyan snga'i yig cha rnams dang/*

[220] *Ibid.*, 1: 6.6-7: *rngog pa'i phyag bzhes spyi'i rgyas 'geb dang 'dra 'dres bsal nas rtsa ba'i rgya gzhung dang mar pa'i dgongs pa 'khrul med gtsang dag tu mdzad pa jo nang rje btsun chen po'i yig cha dang/*

[221] *Ibid.*, 1: 6.7: *dbang gzhung rgyas pa rngog dkyil rnying ma ltar bkod cing sgrub tshul bdag mdun dbyer med shin tu mdor bsdus mgyogs dbang gi ched du bkod pa rje karma chags med kyi yig cha bcas sde tshan lnga tsam mthong ba de dag go bsdur/*

[222] *Ibid.*, 1: 6.7-7.1: *phyi ma gsum ka'i dbang lung rgyun ma chis kyang gtso boer je spyan snga dang/ jo nang rje btsun zung gi gsung ni don ma 'khrul zhing byin rlabs kyi gzi byin chags ba gzhir bcas/*

one collection the "Mar rNgog Teachings" which had until then been scattered and in high risk of being lost.

Circumstances of compilation

Kong sprul describes his project and the conditions of its elaboration in his autobiography and in the introduction to the KGND, at the head of the first volume.[223]

In the early 1850s, 'Jam dbyangs mkhyen brtse dbang po had travelled to the main seat of the rNgog, sPre'u zhing, where he had a vision of Mar pa and had received a prophecy that Kong sprul should codify the rNgog maṇḍalas.[224] From 1852, and more insistently in 1853, he requested Kong sprul to make new manuals for the rNgog maṇḍalas. Karma bsTan pa rab rgyas (19th c.), one of the 9th Si tu's disciple, remarked that although Karma Chags med's manuals were without mistake and full of blessing, they had the defect of being too condensed, although that made them quite convenient to carry. As the continuity of most earlier manuals were on the verge of interruption, it was in effect quite difficult to do group or personal practices on these tantras. It would thus have been good to have new manuals before it was too late and the transmissions was lost. mKhyen rtse, when granting Kong sprul teachings on the rNgog maṇḍalas, argued for his part that these transmissions were incomparable, but the continuity of the old manuals was often interrupted and, in later manuals, the specific import of each tantra was not always clear, so that one often had to rely on post-hoc additions to give a complete transmission.[225]

Faced with these requests, Kong sprul wondered whether he was suited for such a work and asked confirmation and omens from his masters and colleagues. Then, in June 1853, the 9th Si tu, who was considered an emanation of Mar pa, died. As the omens for the composition were good and as Kong sprul wished to honor the memory of his deceased master by creating a collection including all of Mar pa's tantras so that it would be available in dPal spungs, he finally accepted the request and started his task by compiling the manuals for the *Hevajra* transmission.[226]

Over the next year, he consulted all available materials, compiled what was suitable and composed new manuals, all the while doing personal practices on these tantras. During the process, he was blessed first by the visit of the 6th Khra lebs, Ye shes nyi ma (19th c.), who held the complete transmission of the works of the 4th Zhwa dmar. Khra lebs was the recipient of a very pure lineage coming from 'Be lo tshe dbang kun khyab (18th c.), a disciple of the 8th Si tu, who himself had received several lines of transmission from the 4th Zhwa dmar, including the 'Bri gung one mentioned above. Additionally, in the spring of 1854, Kong sprul

---

[223] Barron 2003, mostly pp. 87-97, and KGNDdkar chag, 7.7-9 for the general need of collecting these transmissions, pp. 9-11 on how Kong sprul's masters requested him in particular to undertake such an anthology.

[224] Akester 2016, 254, 266.

[225] KGNDdkar chag, 9.

[226] Barron 2003, 87-92.

was granted the transmission of the complete works of Tāranātha by Karma ’Od gsal ’gyur med (d.u.), and he completed a first version of his work in the summer of that year.

Editions

The dPal spungs xylograph

Kong sprul was based in dPal spungs Monastery, in Khams, located to the south of the capital city of sDe dge. From the 1850s, he lived in the nearby retreat centre of rTsa ’dra rin chen brag, about one hour walk up the mountain behind dPal spungs. Kong sprul’s *Five Treasuries* where all initially printed at the dPal spungs printing house, which is located a few hundred meters from the main temple. In a research trip during the summer 2015, I had the chance to visit the old printing house. Nowadays, it is completed by a new one higher up on the hill, near the bShad grwa, where the *bKa’ ’gyur* is printed. The old printing house remains in use, and when I visited it, two men in their fifties were printing a copy of the 9th Si tu’s *Complete Works*. I was accompanied by a monk from dPal spungs Monastery in charge of the printing house, who was answering my queries.

According to the monk, in addition to the blocks for the *Complete Works* of the 8th and 9th Si tus, there remain onsite the woodblocks of four of Kong sprul’s treasuries, the longest, the *Rin chen gter mdzod* (originally 62 volumes), being missing. The original editions of the *gDams ngag mdzdod* contain ten volumes, the *bKa’ brgyud sngags mdzod* and the *Shes bya mdzod* three volumes each, and the *rGya chen bka’ mdzod* ten volumes.

The blocks of the KGND are kept on the left wall of the second room, where the two men were working; they printed a page of the Dud sol ma *sādhana* at my request. Given the number of blocks, I estimate that only a third of the original blocks are available; according to the monk in charge, there are blocks from all three volumes, but with pages missing, which is why the collection is not printed onsite anymore. He told me a copy of the original collection is kept in the library of the main temple, but I did not access it.

Although the KGND is said to originally contain three volumes numbered *oṁ*, *āh* and *hūng*, it is possible that it was sometimes packed as six volumes. This is what I witnessed with the 9th Si tu’s works, which were being printed. Altough the monk told me it was five volumes, they were packed as ten. He told me the set was sold around 2.300 RMB (approx. 300€).

Original copies and later editions of the KGND

The KGND as we know it today, the one on which I rely for the present work, was published in eight volumes in 1982.[227] This edition differs in several aspects from the original print, the two most obvious differences being the amount of volumes and the order of the texts included. In order to understand how the collection was conceived by Kong sprul, its various

[227] It was published in Paro (Bhutan) by Lama Ngodrub and Sherab Drimey and is available for download on TBRC (W20876).

iterations, and how the present edition may differ from the description provided in Kong sprul's catalogue, it is important to clarify the history of the collection's publication.

We know of the inner organization of the original collection through the following sources:

- The catalogue of the original print, authored by Kong sprul (KGNDdkar chag)
- The records of teaching received by Dil mgo mkhyen brtse Rinpoche (1910-1991) and bDud 'joms Rinpoche (1904-1987).[228]

Then, as far as the original print is concerned, there are two copies whose content was accessible to me during research:[229]

- One copy in three volumes is conserved at the Namgyal Institute, in Gangtok, Sikkim (India). I consulted this copy in December 2015 and made a reproduction of the catalogue created onsite. Unfortunately, one page of the catalogue is missing, so that a complete knowledge of the way the texts are organized is not possible. I did not realize this while in the library and did not inspect each of the three volumes to see if it fitted the catalogue.
- One copy in four volumes is kept at the Uppsala University Library in Sweden. It was brought to Uppsala University by Toni Schmid from an expedition to Sikkim and Nepal in 1962 and catalogued by Helmut Eimer in 1975. Although the catalogue reflects the presence of four volumes, these are in fact the original three which have been shuffled and with some texts missing.[230]

Furthermore, three collections have been published in exile:

- The first modern edition was reproduced in 1974 in Tashijong, Palampur (India) in six volumes.[231] This edition was commissioned via the PL 480 program of the Library of Congress and is therefore kept at several US libraries, but is not available on TBRC.[232] I consulted a copy available in the British Museum.[233] This is a photomechanical reproduction of the original xylographs belonging to gNas gnang dPa' bo gTsug lag snang ba dbang phyug (1912-1991). It was reproduced through the efforts of mDil mgo mKhyen brtse Rin po che by Khams sprul Don grub nyi ma (1931-1979), who

---

[228] See bibliography for details. Dil mgo mkhyen rtse's *gsan yig* is also reproduced in the *gSung 'bum* of the 8th Khams sprul Don grub nyi ma, 5: 465 - 482.

[229] There might be more copies of the original dPal spungs print in traditional, academic and private libraries worldwide. As the aim of the present part is not to gain a precise understanding of the spread of the KGND but rather of the way the collection was and is organized, no effort of comprehensiveness has been made.

[230] *Ibid*. 1975, 7. The part on the KGND is on pp. 54-63. There is no trace of the collection in the actual online catalogue of the library.

[231] See bibliography for all editions. Numbered *oṁ stod* and *smad*, *āh stod* and *smad*, and *hūng stod* and *smad*.

[232] For a description of Gene Smith's contribution to the field of Tibetan studies, and especially his purchasing of books for U.S. research institutions through the PL480, see Smith 2001, ix-x.

[233] I consulted it in May 2017 with the help of Charles Manson, librarian at the British Library.

was the head of the Tibetan Craft Community of the Sungrab Nyamso Gyunpel Parkhang. The original volumes are each divided in two.

- A set in eight volumes was published in Paro (Bhutan) in 1982. It was "supplemented and enlarged at the order of the Ven. mDil-mgo mKhyen-brtse Rin-po-che."
- The publishing house of Dil mgo mkhyen brtse's monastery, Shechen Publications, reproduced the eight volumes in a computerized version in 1994.[234]

The most noticeable difference between the editions is the number of volumes. While the difference between three and six can easily be explained by the fact that the original volumes were bulky and hence cut down into two volumes of a more manageable size (though the volume breaks are not always the same in various editions),[235] the additional two volumes in the 1982 and 1994 editions are more difficult to account for. The TBRC states that the collection was "expanded by Dilgo Khyentse Rinpoche to include special teachings concerned with Vajrapani according to the Ngok tradition." In fact, the Vajrapāṇi transmission included by Kong sprul was received by Ras chung pa, Mi la ras pa's famous disciple, from Varacandra in India[236] and was not transmitted by either Mar pa or the rNgog, so they can hardly be considered the "Mar rNgog tradition." Kong sprul included this tradition of Vajrapāṇi (*ras chung lugs kyi phyag rdor gtum chung*, *phyag rdor gtum chung* for short) in the first part of the KGND, the Initial Virtue, in order to "dispel obstacles,"[237] and it is possible that such was mKhyen brtse's reason too. The Vajrapāṇi tradition included by mKhyen brtse in the 1982 edition is another one, called gTum chen. Kong sprul mentions rituals by Karma Chags med and according to the 'Brug pa tradition, while mKhyen brtse inludes rituals of the Karma bka' brgyud tradition (by the 5th Zhwa dmar and the 9th Karma pa). mKhyen brtse states in a foreword to the 1982 edition that these teachings represent a support (*rgyab brten*) to the KGND,[238] just like the *Zab mo nang don*, the *brTags gnyis* and the *rGyud bla ma* are the theoretical background of the bKa' brgyud tradition. It is as well possible that they were quite rare and that appending them to the original KGND was seen as a good way to safeguard these transmissions. However that may be, the most compelling reason might be that there needed to be a substantial difference between the 1974 and the 1982 editions in order to be able to proceed with a new publication despite the copyright laws.

Leaving aside the obvious aim of the new publication—to disseminate the collection as much as possible (an aim which was achieved, if we are to believe the number of sets present in the various institutions worldwide)—another substantial difference that justifies the 1982 edition is the order in which the texts are reproduced. There is no difference in the content or

---

[234] Matthew Kapstein informed me of the existence of a mTshur phu edition in the end of the 1980s. This is a copy in smaller format of the original three volumes. No more detail is available to me at the time of revision (March 2018).

[235] According to Matthieu Ricard (http://rtz.tsadra.org/index.php/Rinchen_Terdzo_Preface, accessed on 30.06.2017), the Library of Congress did not commission volumes with more than 600 pages through its Public Law 480 Program.

[236] As shown by the history of the transmission included in the beginning of the 7th volume: "Glan lugs kyi lo rgyus." In KGND, 7: 1-11.

[237] KGND dkar chag, 12.3: *gtum chung bar chad sel ba.*

[238] KGND, 1: 1 (there are several p. 1; this is the first one).

orthography of the texts themselves, as all versions (except the computerized one), are reproductions of the original dPal spungs blockprints. The original xylographs, however, like most traditional xylographs of this type, are not numbered continuously: each text has the recto of each folio numbered in the left margin, each time starting at one (*gcig*), without indication of the way the texts should be ordered. The collection, as alluded to by the quotation of bsTan pa rab rgyas above, was in fact largely designed as a teaching material for vajra-masters, who could extract the empowerment ritual they needed when granting an empowerment, or the *sādhana* to be recited during a personal or group practice. When travelling, they did not have to bring the whole set, but only the parts needed. The result of this is that in all of the collections I examined (the Namgyal Institute, Uppsala and British Library sets), the texts were often put in a different order, with texts occasionally missing. This is actually a well-known risk of traditional format books in libraries, where part of a volume is missing because it was borrowed by a lama and never returned. Although the Palampur edition tried to remedy that problem by numbering the volumes continuously, the set was not sorted according to Kong sprul's catalogue before its reproduction, which means that the order is not proper. The 1982 edition by mKhyen brtse, on the other hand, corresponds exactly to the catalogue set by Kong sprul, with no text missing, and with a continuous numbering in each volume. It is probably for this reason that it became the reference edition, and is the reference for the present study. It must be kept in mind, however, that it is only the first six volumes that I call KGND and that no special effort was made to understand the content of the Vajrapāṇi volumes.

Content

There are several generally available tables of contents for the KGND. A short presentation and table of contents is translated in the end of Kong sprul's *Autobiography*;[239] a list of titles of the 1982 edition is displayed on TBRC[240] and on the Rangjung Yeshé Wiki.[241] There are also two catalogues of teachings received, by Dil mgo mkhyen brtse and bDud 'joms Rin po che.[242] Above all, there is Kong sprul's introduction,[243] which presents the origin of the transmissions, the contents, the circumstances of composition, as well as a short presentation of the transmissions themselves and of their respective lineages.

The two *gsan yig* list the titles included in the edition they describe, clearly the dPal spungs edition in three volumes in mDil mgo mKhyen brtse's case, with some variations compared with the titles announced for the 1982 edition. bDud 'joms additionally names authors other than Kong sprul, and there are several differences with the online tables. These differences can often be accounted by the fact that online tables only provide the titles of texts with a title page. Some, however, start mid-page without being explicitly announced with a title-page;[244]

---

[239] Barron 2003, 515-516.

[240] http: //www.tbrc.org/#!rid=W20876 (Accessed May 27, 2017).

[241] http: //rywiki.tsadra.org/index.php/Kagyu_Ngagdzo (Accessed May 27, 2017).

[242] Dil mgo *gSung 'bum*, 25: 48-66; bDud 'joms *gSung 'bum*, 19: 253-278.

[243] KGNDdkar chag.

[244] For instance, the *'Dod khams dbang phyug dud sol ma'i phyi sgrub kyi rjes gnang gi yi ge* by Zhe dang rdo rje is announced in vol. 6: 69-91, and is numbered *kha*. *Ka* was the previous text, with a title page, starting on p.

these are indicated by mKhyen brtse at the same level than the former. Because of this lack of detail in the online tables, the author indicated (generally the last of the several texts included in that heading) may be mistaken. A complete table of content of volumes 1-6 with these sub-titles and sorted by transmission is provided in Appendix 4.

Transmissions contained in the KGND

Kong sprul divides his work into three categories: the initial virtue, the middling virtue and the final virtue.[245]

The initial virtue

The first of the six volumes is made up of what Kong sprul considers auspicious for a beginning: White Tāra, Amitāyus and Mar pa's three special deities—Uṣṇīṣavijayā (*gTsug tor rnam rgyal ma*), Green Tāra (*sGrol ma ljang mo*) and Vajrasattva from King Dzaḥ (*rGyal po dzaḥ nas brgyud pa'i rdo rje sems dpa'*). He also includes the practice of Vajrapāṇi to dispel obstacles, and practices on the master (*bla ma mchod pa*) to open the doors of blessing.[246]

As far as the Vajrapāṇi transmission is concerned, Kong sprul places it in the initial virtue in order to dispel obstacles, although it is considered one of the thirteen highest yoga tantras of the middling virtue. He indicates at the end of the presentation of the initial virtue that the empowerments of this part only consist in authorizations of practice (*rjes gnang*). Complete empowerments to a tantra (*dbang*) are only in the second part. As one cannot technically receive an authorization of practice before having had one's mind matured by an empowerment, the transmission of the KGND set can be granted in the order of the manual only if the student already received a complete empowerment. If that is not the case, the master should start with the transmission of the highest yoga tantras of the second part, and then proceed with the first part and end with the third, protectors. This remark points to Kong sprul's aim when compiling these tantras: he wants to have something handy, with clear directions for use, so that the transmissions can continue easily in the future.[247] This

---

53, but *ga*, which starts on p. 73 on the second line does not have a title page. Not all texts inserted under the banner of *kha* were composed by Zhe sdang rdo rje.

[245] KGNDdkar chag, 11: *lnga pa dbu nas zhabs su bsdus pa'i rnam grangs du zhig gi bstan ce na/ thog mar dge ba/ bar du dge ba/ tha mar dge ba.*

[246] KGNDdkar chag, 12. It must be noted that the specific lama ritual included by Kong sprul was composed by Gling Ras pa Padma rdo rje (1128-1188), the teacher of the 'Brug pa school founder gTsang pa rgya ras (1161-1211). This seems a surprising choice when considering that Kong sprul also authored a guru-yoga of Mar pa that could be imagined to be fitting in a Mar pa bka' brgyud collection. According to mKhan po Chos grags bstan 'phel (email communication, feb. 2018), the ritual composed by Gling ras pa is considered especially blessed as it was written in one go under the direct inspiration of Vajradhara, hence can be considered a guru-yoga of Vajradhara, who is the embodiment of the master. Moreover, according to Matthew Kapstein (oral communication, March 2018), the style of this guru ritual is closer to the Indian and early bKa' brgyud traditions than later guru-yoga rituals are. More research is needed to clarify this question.

[247] KGNDdkar chag, 12.

pragmatism is noted by Peter Schwieger in the context of the *Rin chen gter mdzod* and is a general feature of Kong sprul's work at large.[248]

The middling virtue

This is the heart of the collection, from volume two to five. It consists in sixteen transmissions associated with thirteen highest yoga tantras.[249] In what follows, I explain in a very short and simplified manner the system of Buddhist tantras in order to describe the content of the KGND. The subject is complex and can differ very much depending on the class of tantra one is referring to and the specific perspective of the author. I rely here on the emic presentation made by Kong sprul in the *Shes bya mdzod* and on general definitions of the main terms rather than on secondary scholarship in order to keep with the worldview of the KGND.[250]

A "tantra" is a text of (generally) Indian origin. It can be a "root tantra" (the *Two Segments* for instance, which is the name of the root *Hevajratantra*), or an "explanatory tantra" (like the *Vajrapañjaratantra*, which is the uncommon explanatory tantra of the *Hevajratantra*). There can be several maṇḍalas[251] expounded in a tantra, so that several transmissions can develop on the basis of a single tantra. There are for instance in the KGND two maṇḍalas associated with the *Hevajratantra*, that of the main male deity, Hevajra, and that of his consort, Nairātmyā. Similarly, the *Cakrasaṃvara-* and *Catuṣpīṭhatantra* are, in the KGND, associated with two maṇḍalas, centered on either the male or female figure of the tantra. When these tantras spread in India, they were practiced by people who gained "accomplishments" (siddhis), called siddhas. These siddhas created specific rites associated with these tantras, which gave rise to "traditions" (*lugs*, also called *bka' srol*). The practice of *Hevajra*, for instance,

---

[248] See Schwieger 2010, p. 331: "How did Kong sprul strengthen the continuity of the *gter ma* tradition with his *Rin chen gter mdzod*? He did it in two ways. The first one consists of the concrete volumes of the *Rin chen gter mdzod*, a collection of manuals for the immediate and comfortable use. He provided everything which was needed to perform the respective rituals without the need to search somewhere else. This was his ambition. One of his most used phrases for characterizing the ritual prescriptions he had added himself was "arranged as something you just have to read" (*bklags chog tu bkod pa*). The second one goes beyond the mere texts. It consists of the boost and repair of the empowerment lineages and the reading transmissions of the *gter ma* tradition. To ensure the living practice of the *gter ma* teachings for the future and to make their transmission easier Kong sprul had not only collected a cross-section of the *gter ma* tradition. He also composed an extensive prescription on how to bestow the empowerment for the whole *Rin chen gter mdzod* in one go." Pretty much the same aim is manifest in the *bKa' brgyud sngags mdzod*, even though directions for use are not as explicit as in the *Rin chen gter mdzod*.

[249] For a discussions of the various classifications of tantras, see Isaacson and Sferra 2015; Dalton 2005. One of the thirteen tantras, that of Vajrapāṇi, does not have an empowerment but only an authorization and is thus included in the initial virtue.

[250] Especially Kongtrül, Guarisco & McLeod 2005 and 2008.

[251] The term maṇḍala covers a large array of meaning which largely exceeds the aim of the present study. See e.g. Kongtrül, Guarisco & McLeod 2005, 209-213. In general, which is the way I use it here, the maṇḍala of a deity is his world, made up of a palace, a central deity and several others surrounding it. *Ibid*, 203: "In order for an initiation to be conferred, a mandala must first be entered." This means that when a disciple is empowered, he enters the world of a deity and becomes that deity. From that point onward, he inhabits the world of the deity, and the spiritual path consists in making this outlook the way one sees the world, so that the ordinary world is transformed into an enlightened world.

developed in eight main traditions in India; in Tibet, it flourished in the tradition that Mar pa Lo tsā ba received from Nāropa and in the one that ’Brog mi Lo tsā ba received from Gayādhara, which initially came from Virupa.[252] The main traditions included in the KGND are those coming from Mar pa and are thus associated with Mar pa’s masters Nāropa, Maitripa, Śāntibhadra and their own masters (see Chapter I.2). Mar pa’s traditions are particularly famous for their key-instructions (practical instructions given from master to disciple), which are considered to be particularly efficient for reaching siddhis.

Each transmission included in the KGND comprises several texts that Kong sprul chose among a large pool of rites and commentaries authored by the authors previously mentioned.[253] In general, there is for each transmission an empowerment rite, called a *maṇḍalavidhi* (*dkyil ’khor gyi cho ga*). This is the rite used by the vajra-master when empowering a disciple to the practice of a specific tantra. The empowerment consists in several phases through which the disciple is introduced to the maṇḍala of the deities and is thus empowered by their spiritual strength. This is called the “path of maturation” (*smin lam*).

Once a disciple is empowered, he can practice the deities in question, thus following the “path of liberation” (*grol lam*). This is divided into two phases, the “creation phase” (*bskyed rim*) and the “perfection phase” (*rdzogs rim*).[254] The creation phase is practiced by means of various ritual texts. The most common is called a “practice ritual” (literally “methods of practice,” *sgrub thabs*, *sādhana*); it is the text a practitioner uses to practice on the deity he has been empowered to embody.[255] *Sādhana*s can be of several types depending on the aim of the practice, and can be more or less extensive. There can be further rites aimed at specific activities, such as fire offerings (*sbyin sreg*), and so on. Kong sprul includes *sādhana*s and activity rites for the main transmissions (*Hevajra*, *Nairātmyā*, *Mahāmāyā*, *Catuṣpīṭha*, *Nāmasaṃgīti*, and *Guhyasamāja*). He also includes instructions (*khrid*) on their perfection phase, excepting for *Cakrasaṃvara*, which, he says, are well preserved elsewhere.

---

[252] Guarisco and McLeod 2008, 161-166.

[253] In the collection, there are two types of texts, those composed by Kong sprul and those composed by other authors. In all, there are 126 texts. Out of these 126, 70 were authored by Kong sprul (55,6 %), 37 by other authors (29,3 %), two texts are tantras (1,6 %) and sixteen (13,5 %) are anonymous. Among texts by other authors, five come from Tāranātha, but none from the fourth Zhwa dmar or Karma Chags med. Most of the others come from Karma bka’ brgyud hierarchs, three from Bu ston Rin chen grub, and eight from rNgog masters (all on Dud sol ma).

[254] Guarisco & McLeod 2005, 203: “A person who possesses the [first] two types of confidence initially must learn the meaning of tantra. He or she therefore studies the tantras and their commentaries. Once a sound understanding has been achieved, that student should next begin cultivation of the two phases [of practice] of the meaning of tantra, the precondition for which is to receive, in an appropriate manner, an authentic initiation and to assume properly the pledges and vows. All the stages of the mantric path are thereby included in [two steps]: first, receiving an initiation to ripen oneself and assuming pledges; then, the main element [of the practice], the cultivation of the two phases of the path that effects liberation.”

[255] Rituals of visualization of the deity are also sometimes called *mngon rtogs* (*abhisamaya*) (See Kongtrül, Guarisco and McLeod 2008, 236, n. 1). Simplified *sādhana*s are called “single recollection” (*dran pa gcig pa*) and consists in simplified form of deity practice based only on the visualization of the deity and consort without mandala and retinue (*Ibid.*, 311, n. 20).

According to Kong sprul, the tantras of the middling virtue are all of the highest yoga tantra class.[256] Many systems of teaching (*bka' srol*) were introduced in Tibet by the various translators and paṇḍitas, but here are gathered the tradition that trace back to Mar pa and his four "heart-sons" (see section II.1.3). They were later propagated by all bKa' brgyud schools, foremost among them the Kaṁ tshang and the 'Bri gung. Among these cycles, most were held and transmitted by rNgog Chos rdor and his hereditary lineage (*Hevajra*, two out of four *Cakrasaṃvara* cycles, *Mahāmāyā*, *Catuṣpīṭha*, and *Nāmasaṃgīti*). Two (*Guhyasamāja* and *Buddhakapāla*) were transmitted to mTshur ston dbang nge, and one (*Cakrasaṃvara*) to Mi la ras pa.

A traditional distinction in highest yoga tantras is between tantras that focus particularly on methods (*thabs*)—called "father-" (*pha rgyud*), or *mahāyogatantras*—and those that focus particularly on wisdom (*shes rab*)— "mother-" (*ma rgyud*) or *yoginītantras*.[257] Most of Mar pa's transmissions (*Hevajra*, *Cakrasaṃvara*, *Buddhakapāla*, *Catuṣpīṭha*, and *Mahāmāyā*) are *yoginītantras*. These are further divided in "families" (*rigs*). The first four belong to the Akṣobhya family. The fifth, *Catuṣpīṭha*, to Vairocana's.

The first three transmissions in the collection (*Hevajra* nine deities, *Nairātmyā* fifteen deities and *Pañjāra* combined families) belong to the *Hevajra* cycle. The perfection phase associated with it is called merging and transference (*bsre 'pho*). It was the main practice of Mar pa and the rNgog, and is the one expounded in most detail in the KGND.[258]

Four maṇḍalas (*Peaceful Cakrasaṃvara Vajrasattva* from the *Saṃputatantra*, *Cakrasaṃvara* five deities, *Vajravārāhī* five deities and *Six Cakravartin Cakrasaṃvara* from the *Abhidhānottaratantra*) are associated with the *Cakrasaṃvaratantra* and two of its explanatory tantras. Their perfection phase is called the six doctrines of Nāropa (*nā ro chos drug*). Following in the footsteps of Mi la ras pa and many of the Karma pas, most practitioners of the Karma bka' brgyud school rely on *Cakrasaṃvara* as their main practice, hence the continuity of the six doctrines as they are practiced in relation with *Cakrasaṃvara* is assured, and Kong sprul does not include instructions on them.

Mahāmāyā is expounded through both the main maṇḍala in five deities and instructions on the perfection phase,[259] as is *Buddhakapāla*, with a maṇḍala of twenty-five deities and its perfection phase.[260] As far as *Catuṣpīṭha* is concerned, there are the two maṇḍalas of Yogāmbara (the male deity) and Jñānaḍākinī (the female deity), together with the perfection phase of that tantra.[261]

---

[256] This is a gloss of KGND dkar chag, 7.

[257] For a less traditional presentation, see Isaacson and Sferra 2015.

[258] For this part on the texts included in the KGND, see KGND dkar chag, 12-13. For a list of content of the KGND, with the name of each transmission, its class, etc., see appendix 6.

[259] Described in Guarisco and McLeod 2008, 183-186.

[260] *Ibid.*, 186-187.

[261] *Ibid.*, 179-182.

Additionally, Kong sprul includes two transmissions of Mar pa that belong to the *mahāyogatantra* class, *Guhyasamāja* and *Nāmasaṃgīti*. Tantras in that class are distinguished according to the three poisons, desire, anger, and ignorance. *Guhyasamāja* belongs to the desire class. The cycle expounded in the KGND is that of *Guhyasamāja* with 33 deities of the Ārya tradition, together with its perfection phase, called the Five Stages (*rim lnga*). This was Mar pa's second most important transmission; it was not transmitted by the rNgog but by mTshur ston.

Nāmasaṃgīti is associated with ignorance. Although Mar pa's tradition is considered to be a mahāyoga tantra, it was actually a tantra that rNgog Chos rdor received from other masters than Mar pa. Chos rdor's tradition is called *gSang ldan*, and is more generally associated with the yoga tantra level. Kong sprul elevates it to highest yoga tantra level by virtue of Mar pa's blessing. It is not associated with any perfection phase practice.

Kong sprul includes three more cycles of the father tantras in order to cover mahāyoga tantras of the anger type, although these transmissions do not come from Mar pa. These are the cycles of *Yamāntaka* five deities according to Birvapa's tradition, *Vajrabhairava* nine deities according to Mal Lo tsā ba's tradition, and *Vajrapāṇi* five deities according to Ras chung pa's tradition. No specific perfection phase is included.

In the end of the fifth volume, Kong sprul gathers several Mar pa bKa' brgyud rituals that do not rely on one tantra in particular but explain more general aspects of Mar pa's transmissions such as *gaṇacakra*s (*tshogs mchod*), consecrations (*rab gnas*), empowerments, and so on. Kong sprul does not explicitly mention these texts in the catalogue, hence they tend to be displaced or lost in the various editions.[262]

Final virtue

In the sixth volume are collected texts that make up the final virtue, with four cycles of protective deities. The first is a transmission of the wisdom-protector Four-Arm Mahākāla with thirteen deities. It comes from rGwa Lo tsā ba gZhon nu dpal (1105/1110-1198/1202) and is here according to the Kaṁ tshang bka' brgyud order, with texts by Sangs rgyas mnyan pa (1457-1525) and his disciple, the 8th Karma pa.[263]

The second, Vajramahākāla, is derived from the *Pañjaratantra* and was passed through the rNgog.[264] It is also called the "Aural transmission of Mar pa" (*mar pa'i / lho brag pa'i snyan rgyud*) because it was "very secret." Very little is known about this transmission in secondary sources, and there is only one text by Kong sprul supplemented by the 11th Si tu Padma dbang chog rgyal po (1886-1952) in the KGND. In the daily protector ritual of the Kam tshang

---

[262] One of the texts, the *rJe btsun lho brag pa'i khyad par gyi gdams pa snyan gyi shog dril bzhi'i lo rgyus gzhung lhan thabs dang bcas pa* (KGND, 5: 191-224) also figures in the *gDams ngags mdzod*, 8: 203-233. See Mei 2009, 29-36.

[263] It is presented after the next one in the KGNDdkar chag (KGNDdkar chag, 13 and 40-41) but in this order in the 6th volume.

[264] KGNDdkar chag, 13 and 39-40.

order, the offerings and prayers to Vajramahākāla and Dud sol ma are grouped together, and the two are considered the specific protectors related to the KGND and Mar pa's traditions.

Third is the cycle of *Dhūmāṅgārī* (*Dud sol ma*), which is derived mainly from the *Catuṣpīṭhatantra* and became the central protective deity of the rNgog pa bka' brgyud teaching (see I.2). Many texts in this cycle were authored by rNgog masters, unlike in other sections of the KGND generally authored by later masters or by Kong sprul.

Closing the collection is the transmission of the five bKra shis tshe ring ma, a group of female protectors particularly associated with Mi la ras pa and the "lineage of practice" (*brgub brgyud*).

Legacy

Kong sprul completed a first version of the KGND in the summer of 1854.[265] He then revised the collection several times (in 1856, 1881 and 1886),[266] enriching it with the new transmissions he was receiving from various masters. He transmitted it completely for the first time in the spring of 1860, to the 14th Karma pa Theg mchog rdo rje (1798-1868).[267] He transmitted it again to the 15th Karma pa mKha' khyab rdo rje (1871-1922) in Tsa 'dra in 1887, together with the entire range of Karma bka' brgyud transmissions. On that occasion, many more lamas came to receive the transmission, so that the hermitage was completely full.[268]

In all, Kong sprul transmitted the complete collection on seven occasions, thus ensuring its diffusion.[269] One such moment was in 1882, when Thar rtse sLob dpon 'Jam dbyangs Blo gter dbang po (1847-1914) sojourned in Tsa 'dra for several months with his entourage, also receiving the *gDams ngag mdzod* and several other transmissions.[270] Blo gter dbang po was a disciple of 'Jam dbyangs mkhyen rtse dbang po. Together they compiled a massive collection of *sādhana*s, the *sGrub thabs kun btus*, and later Blo gter dbang po gathered an even more massive set of tantric transmissions, the *rGyud sde kun btus*. Both collections rely on the KGND (as on many other such compilations of all periods) for the inclusion of maṇḍalas relating to the rNgog and Mar pa bKa' brgyud maṇḍalas in general, reproducing the commentaries and rituals authored by Kong sprul.

Blo gter dbang po, from Ngor monastery, commissioned a set of paintings of the 139 maṇḍalas included in the *rGyud sde kun btus*. This collection was brought to exile in the early 1960s by the Ngor mkhan chen bSod nams rgya mtsho (1930-1988, called Hiroshi Sonami during his exile in Japan). He, together with Musashi Tachikawa, published schemas of these

---

[265] Barron 2003, 93-97
[266] *Ibid.*, 223
[267] *Ibid*., 126.
[268] *Ibid*, 224.
[269] *Ibid*, 275.
[270] *Ibid*, 206-207.

maṇḍalas in 1989 and 1991, and Tachikawa, together with Ragu Vira and Lokesh Chandra, also took part in the publication of line drawings of the 139 maṇḍala in 2006. As the *rGyud sde kun btus* includes Kong sprul's *sādhana*s on the rNgog maṇḍala, these reproductions are helpful tools to visualize the specificities of the rNgog transmissions as they are codified in the KGND. The schemas of the Seven rNgog maṇḍalas have been reproduced in the present study, with the authorization of Musashi Tachikawa, to whom I am extremely grateful (see Chapter I.2).

In general, Kong sprul played an instrumental role in the revival of Tibetan Buddhism in Eastern Tibet. He describes in his *Autobiography* how during his life he actively collected and practiced all transmissions available, many of which were on the verge of disappearance. He systematized them in his *Five Treasuries* and taught them widely and repeatedly to those that requested them. Thanks to these colossal efforts, many traditions, including Mar pa's, were effectively saved. In the late 1950s and early 1960s, many bKa' brgyud, rNying ma and Sa skya masters from Khams fled Tibet. Some, like the 16th Karma pa Rig pa'i rdo rje (1924-1981), bDud 'joms Rin po che, mDil mgo mkhyen rtse Rin po che, Ka lu Rin po che (1905-1989), Be ru mKhyen rtse Rin po che (b. 1947), Che tshang Rin po che, and many others, held these traditions and transmitted them in exile, to fellow Tibetans and to Westerners, also republishing the precious sets of text they had brought with them. Thus, the Mar rngog tradition was preserved.

Despite the centrality of the KGND in the bKa' brgyud schools, it is far from being well-known today. As pointed out above, no study goes beyond a general outline of contents, and the rNgog pa lineage is largely forgotten. There are a few individuals who practice the central transmissions of the collection, *Hevajra* and *Nairātmyā*, but in general most bKa' brgyud sub-schools focus on other systems (*Cakrasaṃvara* and *Vajravārāhī*, as well as *Kālacakra* and *Jināsagara*; the latter two are not included in the KGND). It is hoped that the present research can help in a modest way to spread a degree of awareness of the importance of the rNgog lineage for the preservation of Mar pa's teaching and shed some light on the difference of this transmission with that propounded by Mi la ras pa (the sNyan brgyud), sGam po pa (the Dwags po bKa' brgyud), and all the specific developments of the bKa' brgyud sub-schools. The rNgog tradition, as it is presented in the KGND and in other collections such as the DK-DZO, is in some way equated to Mar pa's tradition. The rNgog preserved Mar pa's tantric exegesis and strived to keep it as pure as possible, without mixing it with other traditions. Their main practices, *Hevajra* and *Nairātmyā*, were also Mar pa's. Their main protector, Dud sol ma, was also Mar pa's. Their practice of the perfection phase, merging and transference—the perfection phase associated to the *Hevajratantra*—was also Mar pa's. Hence, the KGND aims at preserving the Mar rNgog Teaching. In some way, this dissertation, although named after the rNgog, is also a study of the Mar rNgog tradition.

CHAPTER TWO: rNgog Traditions

2.1. The seven maṇḍalas

In the rNgog accounts of their religious and family lineage (the *Rosaries*), their transmission is called the "rNgog pa's Teaching" (*rngog pa'i chos/chos skor*) or "Paternal Teaching" (*pha chos*). In lists of teachings received or in other catalogues, it is generally referred to as the "rNgog Tradition" (*rngog lugs*). This family heritage is composed of eight main transmissions together with a few others that figure in the KGND but were not considered representative of the rNgog tradition although some lineages passed through them.[271] The eight are seven maṇḍalas associated with the creation phase of the highest yoga tantras and one practice relating to a protective deity, Dud sol ma. From the late 15th century onwards, the name used to refer to them was the "Seven Maṇḍalas of the rNgog" (*rngog dkyil bdun*).

This phrase seems to have developed largely outside of the family, although the concept was probably present earlier within the lineage. In several texts composed from the 1470s owards, one finds related expressions, such as *rngog pa'i dkyil 'khor bdun* in the *rGya bod kyi chos 'byung rin po che* by dGe ye Tshul khrims seng ge (compiled in 1474).[272] One of the disciples of rNgog Byang chub dpal, Gong dkar ba Kun dga' rnam rgyal (1432-1496), speaks of the *rngog pa'i dbang bdun* in his record of teachings received,[273] and another refers to the *rngog lugs kyi dkyil 'khor bdun* in the biography of Byams pa gling pa bSod nams dpal ldan (1400-1475) written in 1486.[274] The long biography of Lo chen bSod nams rgya mtsho (1424-1482) authored by the 4th Zhwa dmar Chos grags ye shes (1453-1524) contains the words *rngog pa'i dkyil 'khor bdun po*.[275]

The first occurrence of the exact formulation *rngog dkyil bdun* is in the short biography of Lo chen included within 'Gos Lo tsā ba's *Deb ther sngon po*.[276] The biography was not composed by 'Gos Lo tsā ba, who died one year before Lo chen in 1481, so it was not 'Gos Lo who coined the term, which does not figure in his narrative on the rNgog (compiled in

---

[271] These transmissions are White Tārā (KGNGdkar chag, 1: 16) Cakrasaṃvara Vajrasattva in 37 deities (KGNGdkar chag, 1: 23), Six Cakravartin Cakrasaṃvara (KGNGdkar chag, 1: 27) and Vajramahākāla (KGNGdkar chag, 1: 39). It must be noted that there exist several lineages of each transmission, all received by Kong sprul, but only some passing through the rNgog.

[272] *rGya bod kyi chos 'byung rin po che*, f. 30: 2

[273] *rDzong pa kun dga' rnam rgyal gyi gsan yig*, 415. Date of composition unknown.

[274] Byang chub rnam rgyal dge legs's *Byams pa gling pa'i rnam thar*, 19a.

[275] e.g. p. 283

[276] *Deb sngon*, 948, 952 (x 2), 964, 966, 972: *rngog dkyil bdun*.

1476).[277] Lo chen's biography was composed by Karma 'Phrin las (1456-1539) and was added by the editors when printing the *Deb ther sngon po*.[278] Its structure is similar to the longer biography composed by the 4th Zhwa dmar, and may either be based on it, or on notes composed by another disciple that served as a source to both. The printing and wide distribution of the *Deb ther sngon po* in the following years ensured the rapid adoption of the expression in later writings, and from that point onwards, the rNgog tradition is generally referred to as the *rngog dkyil bdun*, the "Seven Maṇḍalas of the rNgog."[279] Thus, as the exact expression *rngog dkyil bdun* is not found in texts predating the *Deb ther sngon po*, we can conclude that it was Karma 'Phrin las pa who coined the expression, although the concept of seven maṇḍalas existed beforehand.

The seven maṇḍalas in question are the following:

1) the nine-deity maṇḍala of Hevajra (*dgyes rdor lha dgu*);
2) the fifteen-deity maṇḍala of his consort Nairātmyā (*bdag med ma lha mo bco lnga*);
3) the forty-nine-deity maṇḍala of *Vajrapañjara* (*rdo rje gur rigs bsdus lha zhe dgu*);
4) the seventy-seven-deity maṇḍala of Yogāmbara, the male form of *Catuṣpīṭha* (*gdan bzhi'am rnal 'byor nam mkha' lha mang*);[280]
5) the thirteen-deity maṇḍala of Jñāneśvarī, the female form of *Catuṣpīṭha* (*ye shes dbang phyug ma lha bcu gsum*);
6) the five-deity maṇḍala of *Mahāmāyā* (*sgyu ma chen mo lha lnga*);
7) the fifty-three-deity maṇḍala of *Nāmasaṃgīti* of the gSang ldan Tradition (*'jam dpal mtshan brjod gsang ldan lugs*).

As will be seen in detail below, rNgog Chos rdor received the first six maṇḍalas as well as the protective deity Dud sol ma from Mar pa and the last, *Nāmasaṃgīti*, from two disciples of Smṛtijñānakīrti. Maṇḍalas 1 and 2 in the list are associated with the *Hevajratantra*, number 3 with the explanatory *Vajrapañjaratantra*, numbers 4 and 5 with the *Catuṣpīṭhatantra*, number 6 with the *Mahāmāyātantra*, and number 7 with the *Nāmasaṃgīti*. Practices of the perfection phase specifically associated with *Hevajra*, *Catuṣpīṭha* and *Mahāmāyā* were also transmitted in the rNgog lineage. Among these, the most representative was "merging and transference" (*bsre 'pho*), which is the name of the practice of the six doctrines (*chos drug*) according to the *Hevajratantra*.[281] In addition to these cycles, Chos rdor also received from Mar pa the transmission of the protective deity Dud sol ma, who became the guardian of his spiritual wealth and the symbol of the rNgog tradition.

In this chapter, the seven tantric transmissions specific to the Mar rNgog lineage are presented so that a general understanding of what the lineage actually consisted in is achieved. The aim

---

[277] See van der Kuijp 2006 for the history of the compilation and first printing of the *Deb ther sngon po*.

[278] Ehrhard 2002, 27-31 and van der Kuijp 2006.

[279] See e.g. *mKhas pa'i dga' ston*, 1: 777, the biography of Kun dga' grol mchog *gSung 'bum*, 2: 203, DL5 *thob yig*, 1: 369b, KGND, 6: 66.

[280] Sometimes the number 97 is given, although *lha mang*, "many deities" is common. As evidenced in the maṇḍala drawn in Tachikawa 1991, 152-154 (see below), there are only 77 deities.

[281] See details below.

is to provide an outline of the elements that constituted the rNgog tradition of these tantras, and to decipher the lineage from which Chos rdor received the transmissions. There is no attempt to actually describe the techniques themselves, except for a very general description of the conceptual background into which these techniques are inscribed. As far as this background is concerned, there is a considerable amount of Western secondary literature devoted to tantric studies, although an academic presentation of the tantric path as is it conceived in the Mar pa bKa' brgyud school remains a *desideratum*.[282] For this reason, no specific effort has been made to account for the secondary literature on tantric practice in general, and I rely mainly on the presentation provided by Kong sprul on this subject, using secondary literature, when available, only to describe the history of individual tantras. I am aware that Kong sprul's presentation may be a late synthesis not necessarily presenting accurately these tantric practices the way they were practiced by Mar pa and the rNgog. An understanding of the tantric exegesis and techniques as they were presented in the first half of the second millennium is however beyond the reach of the present study, which aims at a knowledge of the history of the transmission rather than of its theoretical outlook.

2.2. Transmissions rNgog Chos rdor received from Mar pa

> [rNgog Chos rdor] said: "I made three great surrenders, but did not receive more than three cycles of teachings–not because the master did not have teachings but because my wealth was not enough."[283]

Chos rdor is known to have received Mar pa's commentarial lineage (*bshad brgyud*) and to have preserved all the precise tantric material Mar pa obtained in India. In most biographies, this legacy is described as being made up of three cycles of teachings received as a consequence of three great "donations." The first donation was made shortly after the first meeting, in-between Mar pa's two journeys to India. Mar pa was then invited to gZhung and granted Chos rdor the transmissions of *Hevajra*, which became his main *yi dam* and that of the rNgog pa lineage in general. The second donation occurred at the end of Mar pa's life. It was composed of books and everything that Chos rdor could bring to lHo brag, and served as a support for the transmission of the *Catuṣpīṭhatantra*. The final cycle, that of the *Mahāmāyātantra*, was also received in lHo brag, as a result of Chos rdor having offered to Mar pa his entire herd, even an old, crippled goat.

These great donations are more specifically called "surrenders" (*spong thag*) in the *Rosaries*, with the meaning of clearing away all one's possessions. They are repeatedly mentioned in the part of the *Hevajra* commentary that relates the history of the spread of the tantra in the human realm, together with the hardships Tilopa, Nāropa, and Mar pa experienced to receive the transmission, and they are a common trope in Tibetan Buddhist literature. In traditional accounts, it is explained that these extensive transfers of goods, like the more extreme ordeals

---

[282] For presentation of Indian tantras in general, see for instance Tribe 2000, Sanderson 2013, Wedemeyer 2013, Isaacson & Sferra 2015.

[283] ST1, 9: 5. The *Rosaries* are quoted at the beginning of most sections of the present dissertation, according to the page and line numbers in the facsimile version of the LGNT. Refer to the Tibetan in Appendix 1.

imposed on Nāropa by Tilopa, symbolize the surrender of the disciple to his master and the necessity for him to acquire merit and purify his negativities. Biographies generally devote a lot of space to the description of the extensive offerings the disciple makes to his master, generally only referring to the religious aspect of the question.[284] It is clear, however, that in Tibet offerings are much more than a spiritual exercice of the disciple, and they played a crucial role in the economical, cultural, social, and symbolic life of the land. It is therefore important to reflect analytically on the meaning of these descriptions. Although this question largely exceeds the ambition of the present study, the distinctions provided by Nicolas Sihlé in his article "Towards a Comparative Anthropology of the Buddhist Gift (and Other Transfers)" can be useful.[285]

Sihlé (following a distinction made by the anthropologist Alain Testart and the sociologist Florence Weber and in order to analyse Marcel Mauss' definitition of the gift) distinguishes between a "gift" and an "exchange." In the case of a gift (for example giving alms to a begging monk), there is no obligation to reciprocate.[286] In an exchange, however, there is an obligation. This is the case for instance with ritual services and their remuneration. Chos rdor's "surrenders" to Mar pa belong to this second kind of transfer: it is an exchange of the disciple's material goods (here livestock, Buddhist texts, etc.) against the master's religious goods (tantric transmissions). Thus, according to Sihlé, despite the terminology of "donation" or "offerings," these transfers of goods are not analytically in the realm of the gift; they are provisions of specialist services, with an expectation of ritual efficacity, in return for which remuneration is expected. This distinction is actually acknowledged by Mar pa:[287]

> [Chos rdor] offered that horse to the Venerable (who said: "if that is an offering, it is small indeed. If that is a support for a request, that is big indeed!")

---

[284] See for example the description of rNgog Chos rdor's offerings to Mar pa in Mi la ras pa's biography written by gTsang smyon, Tsangnyön 2010 (tr. Quintman), 74-77: gTsang smyon insists on the fact that Chos rdor brings all his possessions to Mar pa, except for an old cripple goat because it "is the grandmother of the entire herd and […] has an injured leg and could not get here." Mar pa then replies that he cannot grant his most secret instructions without the goat, and so rNgog returns home and brings it. This episode seems to be a playful one as everyone is laughing when Mar pa requests the goat, but the episode nothetheless concludes with "You can truly be called a disciple of Secret Mantra who maintains his commitments. I have little use for a goat but needed to emphasize the great value of the dharma."

[285] Sihlé 2015.

[286] The vision of the universality of the obligation to reciprocate a gift is one of Marcel Mauss' core theses in his *Essai sur le don*, written in 1925 (see Sihlé 2015, 353). Alain Testart (Testart 2007, chap. 1, translated in Testart 2013) distinguishes, however, between a gift, where the donor cannot demand any counterpart in return for his gift, and an exchange, where there is an obligation to reciprocate (see definition in Testart 2013, 260). Sihlé 2015 further argues that the centrality of the Buddhist gift, especially in a Tibetan framework, should be reevaluated as in many cases what is presented as a gift is in fact an exchange. See for instance Sihlé 2015, 375: "in a nutshell, economic relations between the laity and Buddhist religious specialists *qua* religious specialists are marked here [in Lower Mustang, a Tibetan-speaking society in the Nepalese Himalayas] by the predominance of ritual services and their remuneration, and the relative minor importance of forms of Buddhist gift-giving."

[287] ST1, 9.

rta de rje btsun la (bas 'di 'bul ba yin na chung yang chung/ zhu rten yin na che yang che gsung ngo/) phul nas.[288]

In this case, the word "offering" (*'bul ba*) does not refer to a "gift" (with no obligation to reciprocate) but to the "remuneration" expected for the transmission of an empowerment. The "support for a request" (*zhu rten*), on the other hand, is an initial transfer of goods aimed at requesting the actual transmission, which can be understood as an "offering," that is to say that it is a gift marked by the donor's self-interest.[289] Thus, in this case, Mar pa informs Chos rdor that a horse is a very large offering (it is a lot for an initial token of interest), but it is too little to actually receive the transmission; for that, the whole herd is needed.

Sihlé further notes that "the appropriate amount of goods to be given in return for a certain type of religious service is not always fixed according to a simple pattern of equivalence of value: the social identities of the participants in the transaction may influence the exchange."[290] Although he means this especially for poor recipients of ritual services who are expected to provide more modest remunerations than richer ones, in the case of Chos rdor and Mar pa, the contrary is true. The greatness of the "remuneration" (three times all of Chos rdor's wealth) cannot equate the greatness of Mar pa's religious service, both in terms of the goods transferred and his own legitimacy at transferring them. While this sentence apparently serves to explain why Chos rdor only receives three cycles of teachings from his master's infinite religious wealth, it also in effect demonstrates the greatness of both disciple and master. With regard to Chos rdor, the amount of material goods he is pictured to give to Mar pa marks his social status. Let aside the probable exaggeration of the account, if Chos rdor can provide his master with such a large amount of goods, it means that he can afford it, hence that he has a lot of economic power and thus belongs to the dominant part of the society. Second, the story shows the superiority of religious goods over economic goods in the Tibetan society of the time, or at least in an independent religious field which frames the narratives. In this religious field, Chos rdor and Mar pa are skilled players endowed with suitable types of capitals. By this exchange of economic capital against religious capital, both gain symbolic capital and power (see Chapter I.3). As pointed out by Sihlé using Bourdieu's concepts,[291] there is in this case an "euphemization of the economic relationship" that serves both donor and recipient, as well as the hagiographic framework in general.

---

[288] One can note that the words *dbang yon* or *mchod yon* generally used to refer to the offering a patron (*yon bdag*) makes to a religious master (*mchod gnas*) are not used here (see an explanation of those terms in Ruegg 1991 and 2004). According to Ruegg 2004, 9, this distinction appeared in the 13th century with the Mongol-Sa skya alliance, possibly earlier during the Tibetan Empire. In the present case, the exchange is not between a temporal ruler and a "priest," but between agents of the religious field: there is a *zhu rten*, an offering that supports a disciple's request to receive an empowerment, to which the master may reply with the actual transmission.

[289] Testart 2007, 161-162, distinguishes three forms of gift depending on the expectations of the donor regarding a possible counterpart. In the first category, the expectation of a counterpart is central to the gift; this is the case of offerings made to a deity (or here to a master) in a spirit of *do ut des* ("I give this so that you give this").

[290] Sihlé 2015, 356.

[291] Sihlé 2015, 356, quoting Bourdieu's *Practical Reason: On the Theory of Action* (Stanford : Stanford University Press), p. 114.

2.2.1. *Hevajra*

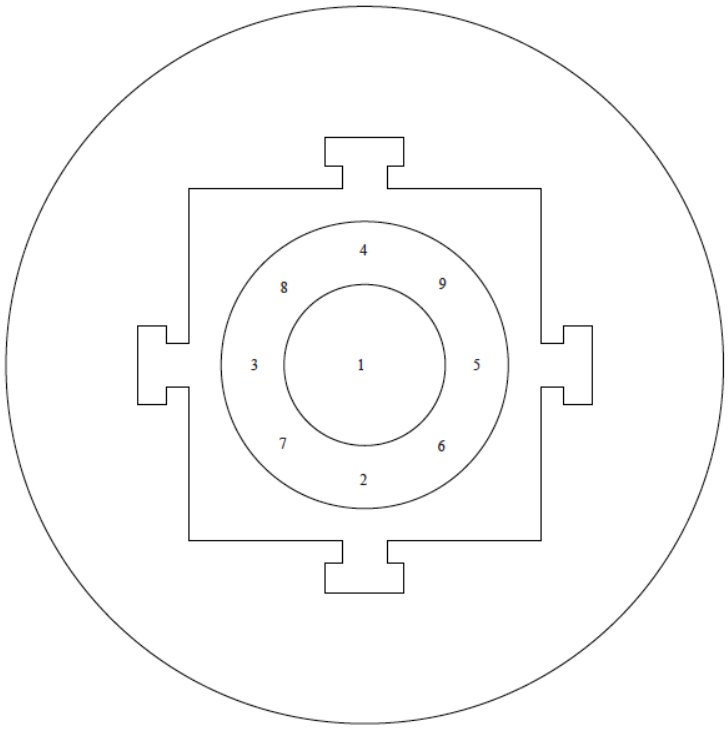

Plate 3: 9-deity maṇḍala of Hevajra with 8 *ḍākinīs* (*dgyes rdo lha dgu*), Tachikawa 1991, 182 (maṇḍala 107)

Through his vast material offerings, rNgog Chos rdor is pictured to obtain three tantric cycles. The first and foremost is *Hevajra*, which three maṇḍalas (Hevajra, Nairātmyā, and *Pañjara*).

The specificities of the rNgog transmission of *Hevajra*

> ([Chos rdor] made a first surrender and gave [Mar pa] a tent with a herd of hundred black female yaks).[292] It is said that he received a first cycle containing:
> - the root tantra [of *Hevajra*]–the *Two Segments*;
> - the explanatory tantra–the *Pañjara*;
> - five *sādhana*s: the *Saroruhavajra-sādhana*; the *Six Branches*; the *Five Ḍākinīs*; the *Amṛtaprabha*, and *Nairātmya*;[293]
> - the empowerment in the 9 male deities, the 15 female deities and the combined families of the *Pañjara*;
> - instructions on the six doctrines of Nāropa.[294]

---

[292] ST2, 34: 1 adds "as well as one third of his possessions."

[293] The name of the fifth *sādhana* is mistakenly given as *bde ma* in *lHo rong chos 'byung*, 51.

[294] See ST1, 9: 1-3; ST2, 34, 1-2 for the Tibetan version of the text, and appendix 1 and 2 for a comparative edition and a translation indicating differences between ST1 and ST2.

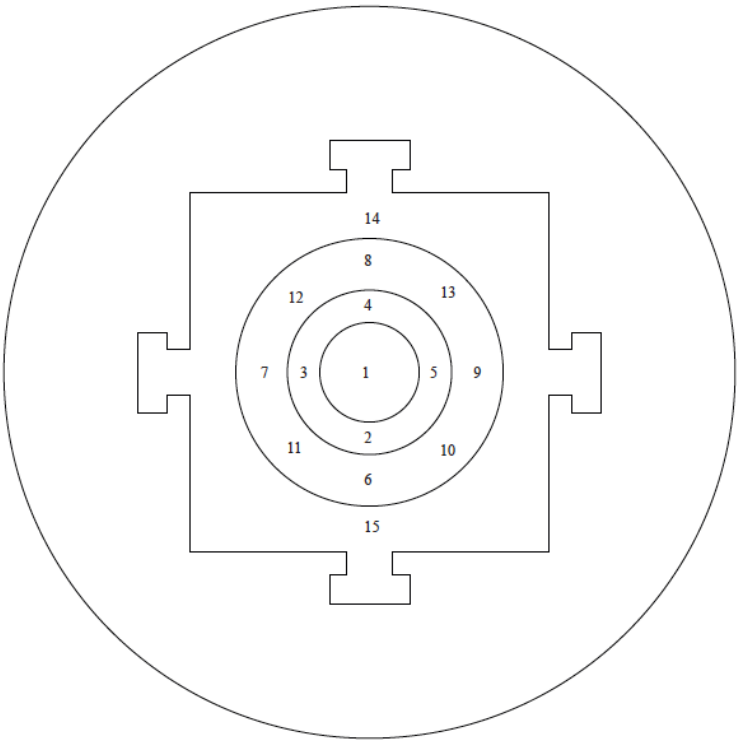

Plate 4: Fifteen-deity maṇḍala of Nairātmyā with 14 *ḍākinī*s (*bdag med ma lha mob co lnga*), Tachikawa 1991, 183 (maṇḍala 108)

Granted as an outcome of the first donation, the first cycle of teachings contained the transmissions related to Mar pa's tradition of *Hevajra*, which, according to Kong sprul,[295] is mostly based on Nāropa and Maitripa's oral instructions as well as on the Indian traditions of Saroruhavajra (*mTsho skyes rdo rje*) and Ḍombīheruka.[296] Its main item is the root *Hevajratantra*, also called the *Two Segments* (*brtag gnyis*).

According to the *Rosaries*, the translation used in the rNgog pa tradition was that of 'Brog mi.[297] It is not clear whether this was the translation used when Chos rdor received the tantra in the 11th century, or whether this was the translation used later in the rNgog lineage. If it is the former, it indicates that translations circulated quickly, as Mar pa's tradition rivaled 'Brog mi's but nonetheless may have used his translation. As the *Rosaries* date to the late 14th century, it is also possible that another translation was used at Mar pa's time, but over time gave way to 'Brog mi's, which was universally recognized and used. A precise study of Mar pa's and the rNgog's compositions on the topic should help ascertain the matter.

---

[295] KGNDdkar chag, 5-6.

[296] See Sobisch 2008, 29-49, for a presentation of the *Hevajra* literature (the root and explanatory tantras) and the eight traditions (in A mes zhabs's counting) that developed in India. The eight are the "six great chariot systems" (*shing rta'i srol chen po drug*) and the "two systems of pith instructions" (*man ngag lugs*). Mar pa's tradition is one of the two and is explained on pp. 46-48. According to Sobisch 2008, 26, n. 36, Saroruhavajra is generally identified in the Sa skya pa literature with Padmavajra (Padma rdo rje). See also Szántó 2015c for a general presentation of the *Hevajratantra* and its literature.

[297] ST1, 19: 5.

There are numerous commentaries on this tantra in the rNgog pa lineage. The most well-known is the *Rin po che's rgyan 'dra*, composed by rNgog mDo sde. The etymology of the title is not clarified in the *Rosaries*. Ngor chen Kun dga' bzang po considers that it is a "likeness" (*'dra*), that is to say a replacement of Chos rdor's lost *Rin po che'i rgyan*.[298] Padma dkar po, however, says it is "like a precious ornament" adorning the commentary authored by Mar pa and continued by his disciple Chos rdor, called the *bKa' yang dag pa'i tshad ma*.[299] This latter text still exists and is reproduced in the NKCK (but not NKSB), and there is no text by Chos rdor called *Rin po che'i rgyan*. As absence of proof is not proof of inexistence, it is possible that such a text existed and was lost, as Ngor chen states; it is also possible that Ngor chen's story derives from that of the lost relics that were brought to Khams at mDo sde's time and that mDo sde had to obtain again from Jo mo sGre mo (see section II.3.2.3 for details), and that this text was not lost, and mDo sde's version hence not a replacement.

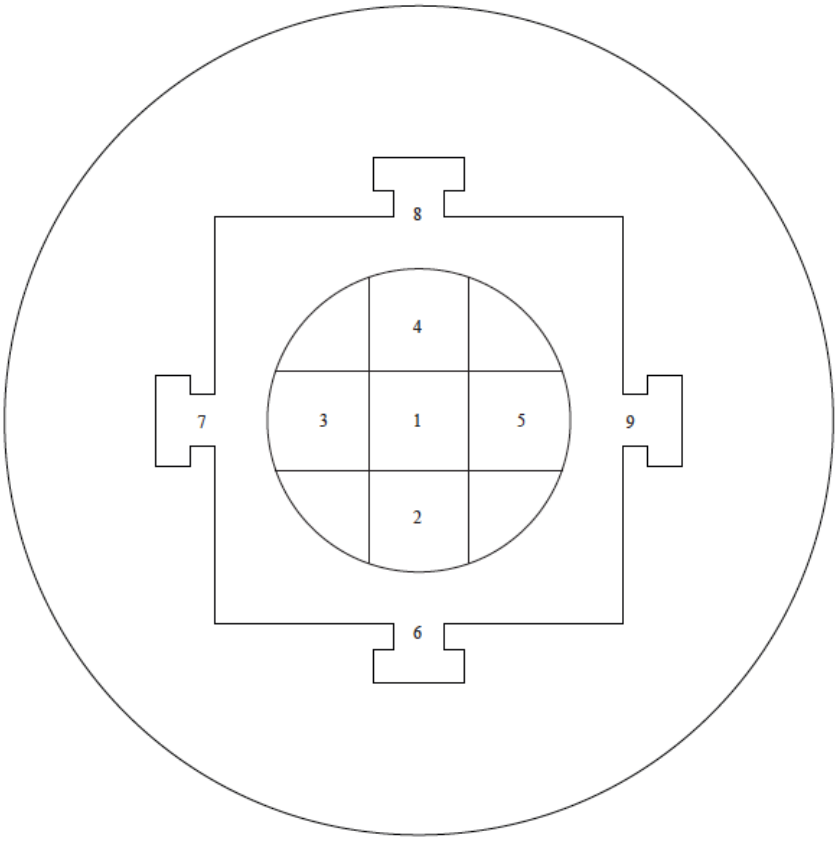

Plate 5: 49-deity *Vajrapañjara* Maṇḍala (*rDo rje gur rigs bsdus lha zhe dgu*): five 9-deity maṇḍalas with a central Hevajra and 8 surrounding *ḍākinī*s of the five families, as well as four guardian deities. Tachikawa 1991, 186-187 (maṇḍala 110)

[298] Sobisch 2008, 47, n. 121. mDo sde's commentary is reproduced in NKSB, vol. 3.

[299] *Pad dkar chos'byung*, 463. See section II.3.1 for more details.

The *Hevajratantra* is known to have two main *vyākhyātantra*s (*bshad rgyud*), or "explanatory tantras," the *Vajrapañjara-*[300] and the *Saṃpuṭatantra*.[301] The former is an uncommon explanatory tantra, referring only to the *Hevajratantra*. The latter is a common explanatory tantra, expounding on both the *Hevajratantra* and the *Cakrasaṃvaratantra*. As Mar pa's *Hevajra* tradition prides itself in relying mostly on Nāropa's instruction without being mixed with the *Saṁpuṭatantra* teachings,[302] it is only *Pañjara* that is mentioned among the transmissions received by Chos rdor from Mar pa as a result of his first great donation.

Chos rdor is said to have received five *sādhana*s linked with the *Hevajra* cycle. The first was the *Saroruhasādhana*, composed by Padmavajra. Mar pa received it from sPyi ther pa during his first journey to Nepal, together with the *Hevajratantra*, and it belongs to Saroruha's tradition.[303] The other four *sādhana*s belong to Ḍombīheruka's tradition. The first two are practices centered on the male-deity Hevajra composed by Durjayacandra (*Mi thub zla ba*): the *Six Limbs* (*yan lag drug pa*), which is centered on the nine-deity maṇḍala of *Hevajra*,[304] and the *Five Dākinīs*, which is centered on the combined families (*rigs bsdus*) derived from the *Pañjaratantra*.[305] The remaining two *sādhana*s are practices on the fifteen deity-maṇḍala of Nairātmya. The first, the *Amṛtaprabha* (*bdud rtsi 'od*), was composed by Ḍombīheruka and received by Mar pa from a *yoginī* during his last sojourn in India.[306] The second was composed by Durjayacandra.[307] The translations of these practices included in the *bsTan 'gyur* were made by 'Brog mi Lo tsā ba.

As a prerequisite for the practice of the *Hevajra sādhana*s, Mar pa bestowed three empowerments on rNgog Chos rdor: the empowerments in the nine-deity maṇḍala of *Hevajra*

---

[300] *Ḍākinīvajrapañjara-mahātantrarājakalpa* (*'Phags pa mkha' 'gro ma rdo rje gur zhes bya ba'i rgyud kyi rgyal po chen po'i brtag pa*). Tōhoku 419. Dergé Kanjur, vol. *nga*, folios 30r.4-65v.7. Tr. by Gayadhara and Shākya ye shes. This is often called in short the *Pañjara* (skt) or *Gur* (tib).

[301] *Saṃpuṭa-nāma-mahātantra* (*Yang dag par sbyor ba zhes bya ba'i rgyud chen po*). Tōhoku 381. Dergé Kanjur, vol. *ga*, folios 73v.1-158v.7. Tr. by Gayadhara and Shākya ye shes. Revised by Bu ston. This is often called in short *Saṃpuṭa* (skt) or *dPal kha sbyor* (tib).

[302] See the discussion on that topic in Sobisch 2008, 46, n. 114.

[303] Despite the shorthand title *Saroruhasādhana* provided in the *Rosaries*, the text is actually called *Hevajrasādhana* (*Dpal dgyes pa rdo rje'i sgrub thabs*). Tōhoku 1218. Dergé Tanjur, vol. *nya*, 1v.1-7r.2. Tr. by Shākya brtson 'grus. See Sobisch 2008, 36 for references, and KSTC, 153, for an early mention of that transmission.

[304] *Ṣaḍaṅgasādhana* (*Yan lag drug pa zhes bya ba'i sgrub thabs*). Tōhoku 1239. Dergé Tanjur, vol. *nya*, folios 126v.2-130r.3. Tr. by Ratnaśrījñāna and Shākya ye shes. See Sobisch 2008, 33, and NKSB, vol. 16, 21-67, for a commentary on that practice by rTsags Dar ma rgyal po.

[305] *Ḍākinīvajrapañjarapañcaḍākasādhana* (*Mkha' 'gro ma rdo rje gur gyi mkha' 'gro rnam pa lnga'i sgrub pa'i thabs*). Tōhoku 1321. Dergé Tanjur, vol. *ta*, folios 249r.1-254v.1. Tr. by Līlavajra and Se rtsa Bsod nams rgyal mtshan. There is a commentary on that practice by mGar ston bkra shis dbang phyug in NKSB, vol. 18, 246-277. See Sobisch 2008, 33.

[306] *Amṛtaprabhāsādhanopāyika* (*bDud rtsi 'od kyi sgrub pa'i thabs*). It is actually called *bDag med rnal 'byor ma'i sgrub thabs*, Tōhoku 1305, vol. *ta*, ff. 212b7-215a7 in the Dergé Tanjur. Tr. Gayadhara and 'Brog-mi. See rNam rdzong ston pa, 97 and Sobisch 2008, 34 for references.

[307] *Nairātmyāsādhana* (*Bdag med ma zhes bya ba'i sgrub pa'i thabs*). Tōhoku 1306. Dergé Tanjur, vol. *ta*, folios 215r.7-217v.5.Tr. by Gayadhara and Shākya ye shes. See Sobisch 2008, 33. The commentary by mGar ston bkra shis dbang phyug in NKSB, vol. 18, 199-237 may refer to that practice.

and in the fifteen-deity maṇḍala of *Nairātmya* deriving from the *Hevajratantra*, as well as the empowerment in the forty-nine combined families maṇḍala, which is found in the explanatory *Vajrapañjaratantra*. These three maṇḍalas became three of the "seven maṇḍalas of the rNgog."

Merging and Transference (*bSre 'pho*)

In general, the tantric path is made up of the path of ripening (*smin lam*, empowerments) and the path of liberation (*grol lam*, the actual meditation practice). The latter comprises two phases, the creation phase where one mentally creates the maṇḍala of the deity (*bskyed rim)* and the perfection phase (*rdzogs rim*). The perfection phase is further divided into methods (*thabs*), also called meditation "with characteristics" (*mtshan bcas*), and liberation (*grol*), meditation "without characteristics" (*mtshan med*).[308] In the bKa' brgyud lineages, these two are respectively known as the "six doctrines of Nāropa" (*nā ro chos drug*) and *mahāmudrā*. The present section is a general introduction to the practices of merging and transference (*bsre 'pho*), which is the special name given to the six doctrines in the rNgog tradition.

The term "six doctrines" refers to practices associated with the perfection phase of various highest yoga tantras. It is used in different contexts, for instance the "six doctrines of Nāropa" or the "six doctrines of Niguma," and the six are therefore not always the same. In later syntheses, the term six doctrines of Nāropa generally came to be associated with six specific practices: inner heat (*caṇḍālī, gtum mo*); dream (*svapna, rmi lam*); luminosity (*prabhāsvara, 'od gsal*); illusory body (**māyākāya/māyādeha, sgyu lus*); the intermediate state (*antarābhava, bar do*); and transference (*utkrānti, 'pho ba*); however, in many other accounts, there can be seven, eight or more practices.[309] In the bKa' brgyud lineages coming from Mar pa, these practices are associated, in particular, with the yoginī tantras (*ma rgyud*). They come from Tilopa, who received them, together with the tantras they are associated with, from the masters of the "four currents" (*bka' babs bzhi*).[310] In the Shangs pa bKa' brgyud lineage, the six doctrines of Niguma are associated with the mahayoga tantras (*pha rgyud*), especially the *Guhyasamājatantra*, that Khyung po rnal 'byor received from Niguma.[311]

---

[308] See SByD, 3: 325: *spyir lam la smin grol gnyis/ grol lam la bskyes rdzogs gnyis/ rdzogs rim la'ang mtshan bcas mtshan med gnyis sam thabs grol gnyis* […]. See Kongtrül & Harding 2007, 149.

[309] According to Kong sprul, the presentation in four root doctrines and two branches that led to the counting of six comes from sGam po pa (Kongtrül & Harding 2007, 152). Two further practices are entering another's body (*parapurapraveśa*; *grong 'jug*) and action *mūdra* (*karmamūdra, las rgya*). See SByD, vol. 3: 325-327 (Kongtrül & Harding 2007, 149-152) for the various syntheses of the genre "six doctrines" that were developed in the early bKa' brgyud schools. See also Kragh 2011, with regard especially to the sources of these practices. There are many more articles on the subject, though a more encompassing study is yet to appear (see for instance Mullin 1996, 1997 and 2006, Torricelli 1996 and 1997).

[310] See section II.1.2 for an account of this presentation of the "four currents of transmission."

[311] Harding 2010, 135.

As for the development of these practices after Mar pa, rGod tshang ras chen (1482-1559) explains the following:[312]

> Up to Lord Mar pa and rNgog, the maturing empowerment and the creation phase of the path of liberation were conferred depending on [the practitioner's] personal aspiration according to *Guhyasamāja*, *Hevajra*, *Catuṣpīṭha*, *Mahāmāyā*, *Buddhakāpala*, *Vajravārāhī* and so forth, and in the perfection phase, *mahāmudrā* and the six doctrines were also practiced according to one of these. From Mi la ras pa onwards, however, the maturing path and the creation phase relied mostly on only the Glorious Cakrasaṃvara and his consort; in the perfection phase, methods [=the six doctrines] and liberation [*mahāmudrā*] were taught as one pair, like the sun and moon.

According to this quotation, at the time of Mar pa and rNgog Chos rdor, it was customary to use a diversity of tantras to mature through empowerment, depending on the student's aspirations. Depending on the tantra one was empowered into, one would then practice on the path of liberation through the creation and the perfection phases associated with that deity. As Mi la ras pa focused particularly on the *Cakrasaṃvaratantra* and the practices related to this tantra, the later bKa' brgyud schools coming from him (the "four primary and eight secondary" bKa' brgyud orders) relied more specifically on this tantra, and the practice known as the six doctrines of Nāropa in these orders are therefore particularly related to the *Cakrasaṃvaratantra*. In the rNgog tradition, however, there was no particular emphasis on *Cakrasaṃvara*, but rather on three other tantras, *Hevajra*, *Catuṣpīṭha* and *Mahāmāyā*, and one finds in this lineage perfection phases related to the three.[313] Among these, the tantra that was particularly favored by Mar pa and by the rNgog was *Hevajra*. In the introduction to his *Manual of Instruction on the Hevajratantra in Mar pa's Tradition*, Tāranātha states:[314]

> In general, although all of Mar pa's instructions on the perfection phase can indeed be referred to by the expressions "merging" and "transference," the following instructions are especially a guidance on *Hevajra* and are known by the name "merging and transference."

Mar pa imported from India various sets of key instructions on the perfection phase that can all be referred to as practices of "merging' (*bsre ba*) and "transference" (*'pho ba*), and many

---

[312] *bDe mchog spyi bshad*, 19: *de la rje mar rngog yan chad du smin byed dbang dang grol lam bskyed rims ni gsang 'dus/ dges rdor/ gdan bzhi/ ma hā ma ya/ sangs rgyas thod pa/ rdo rje phag mo sogs rang gang mos la/ rdzogs rims phyag chen/ chos drug kho na la gtso bor mdzad la/ rje mi la man dpal bde mchog 'khor lo dang/ rje btsun ma gnyis kho na la smin lam dang bskyed rims gtso bor mdzad cing/ rdzogs rim thabs grol nyi zla zung gcig la gtso bor rus su ston pa yin no*.

[313] See for instance the three instructions related to the rNgog included in the *Jo nang khri brgya*, a collection of perfection phase instructions compiled by Kun dga' grol mchog (1507-1566) and included in the *gDams ngag mdzod* (DND, 18: 127-354): the 71st is the *gdan bzhi khrid yig* (pp. 269-271), the 72d is the *ma hā mā ya'i khrid yig* (pp. 271-274) and the 88th is the *rngog pa'i bsre'pho'i khrid yig* (pp. 303-304). Further explanations on the *Catuṣpīṭha* and *Mahāmāyā* perfection phases are found in SByD, vol. 3: 250-254; Kongtrül, Guarisco & McLeod 2008: 179-186.

[314] KGND, 2: 110: *spyir mar pa'i gdams ngag rdzogs rim thams cad la/ bsre ba dang 'pho ba'i brda chad re mdzad mod kyang/ gdams ngag 'di la ni khyad par du yang dgyes pa rdo rje'i 'khrid bsre 'pho zhes grags so*.

of Mar pa's distant disciples in the bKa' brgyud sub-lineages used these terms in various syntheses.[315] Mar pa's personal deity, like rNgog Chos rdor's, was Hevajra. It was therefore the practice of "merging and transference," especially related to the *Hevajratantra* that became representative of Mar pa's tradition and was continued by the rNgog.[316] Although several of Mar pa's disciples received it, this system was particularly well preserved in the rNgog tradition, which made clear distinctions between the instructions coming from Nāropa and those coming from Maitripa,[317] and was thus sometimes called the "six doctrines of the rNgog" (*rngog pa'i chos drug*),[318] although other lineages also used the term "merging and transference". The 4th 'Brug chen Padma dkar po, for instance, compiled two volumes on the topic. Although he held several lineages passing through the rNgog, it is clear that the name "merging and transference" is not, in this context, restricted to the rNgog tradition.[319]

The way to practice merging and transference according to Mar pa's tradition, which was continued by the rNgog, is described in Tāranātha's *Manual of Instruction on the Hevajratantra in Mar pa's Tradition*.[320] It can be summarized by this extract of Nāropa's Eight Verses (*tshigs bcad brgyad ma*):[321]

> [Nāropa's instructions] may be classed according to the three intermediates states
> Of life,[322] dream and becoming.
> Their cultivation is subsumed in the two [categories of] merging and transference.
> Merging includes methods to reach Buddhahood through cultivation
> Transference is [made up of] method to reach Buddhahood without cultivation.

---

[315] See Kemp 2015 and Kongtrül & Harding 2007, 149-152.

[316] It must be noted that Mar pa's tradition of *Hevajra* was not the only one to enter Tibet: there was eight main traditions (SByD, vol. 3: 238-241; Kongtrül, Guarisco & McLeod 2008, 161-166, Sobisch 2008). Out of these eight, the "Path with its Result' (*Lam 'bras*) is the name given to practices of the perfection phase of the *Hevajratantra* in the Sa skya tradition (see Stearns 2001 and 2006).

[317] Tāranātha (KGND, 2: 170) refers to the Mes tradition and the Ram tradition, in which the instructions by three Indian *mahasiddhas* were combined, while the rNgog tradition distinguished between Nāropa's and Maitripa's instructions. At Tāranātha's time, only the rNgog tradition was uninterrupted. See also BA, 407.

[318] See *bDe mchog spyi bshad*, 17 and KGND, 2: 170:

[319] "Jo bo nā ro pa'i khyad chos bsre 'pho'i khrid rdo rje'i theg par brgod pa'i shing rta chen po," in *Sras 'pho yig rnying*, 22: 13-14. Padma dkar po's main lineage was the one passing through Mar pa, Mi la ras pa, sGam po pa, Phag mo gru pa, Gling ras pa and gTsang pa rgya ras (the 1st 'Brug chen, 1161-1211). He held other lineages passing through the rNgog, for instance the one that gTsang pa rgya ras received from rNgog mDo sde's grandson rDo rje seng ge (1140-1207), or another that Kun dga' dpal 'byor (the 2d 'Brug chen, 1428-1476) received from rNgog Byang chub dpal.

[320] KGND, 2: 109-171. See a summarized translation of the various aspects of this practice in Kongtrül, Guarisco & McLeod 2008, 343-350.

[321] This verse is used by Kong sprul to describe how the six doctrines are synthesized in the rNgog tradition (SByD, 3: 239). Mar pa's commentary to the eight verses are found in many collection (e.g. DK-DZO, 5: 408; 6: 143; sGam po pa's *bKa' 'bum*, 4: 36; *Phyag chen rgya gzhung*, 549…): *skye shi rmi lam bar do dang/ srid pa bar do gsum du gnas/ nyams len bsre 'pho gnyis su 'dus/ bsre ba bsgoms pas sangs rgyas thabs/ 'pho ba ma bsgoms sangs rgyas thabs.*

[322] The "intermediate state of life" (*skye shi bar ma do*) refers to the state between birth and death. "Becoming" is the time between death and another rebirth. See NKSB, 2: 131.

This verse is commented upon by one of rNgog mDo sde's disciples:[323]

> It is said that for the three intermediate states, there are key-instructions about both merging and transference. Practices of merging are methods for reaching Buddhahood through cultivation. Transference is a method for reaching Buddhahood without cultivation. As to the former, these are the so-called instructions on merging. With regard to these, in the intermediate state of life, one merges with key-instructions of both creation and perfection. In the intermediate state of dream, one merges dream and meditation. In the intermediate state of luminosity, one merges with luminosity.

The rNgog lineage of *Hevajra*

> The lineage of *Hevajra* and *Pañjara*:
> These lineages having been received by Nāgārjuna, he gave them to Tilo, and likewise to Nāropa, Mar pa, Sūtrantā [mDo sde]; […]
> (Vajradhāra; Vajrapāni, Kalpabhadrī, Tilo, Nāro, Mar pa.
> Also: Dombhi Heruka, Thar pa lam ston, Mar pa.
> Also: Lava'i nam zas, Maitripa, Mar pa.)[324]

At first sight, the lineage of *Hevajra* and *Pañjara* outlined in the *Rosaries* is straightforward. Tilopa receives the transmission from Nāgārjuna, and passes it on to Nāropa and then to Mar pa. In a note, ST1 adds three other lines of transmission, in what resembles a mix of the Four Currents of Transmission and Mar pa's masters of the four directions.[325] It is difficult to make sense of these lists of masters, which do not correspond to the general system outlined in section II.1.2. What transpires, however, is that *Hevajra*'s transmission is central in Mar pa's tradition and is blessed by India's prevailing masters.

In the KGND, Kong sprul distinguishes between various traditions of the three main maṇḍalas (the nine- and fifteen-deity maṇḍalas of *Hevajra* and *Nairātmyā* and the 49-deity maṇḍala of *Pañjara*). As far as the nine-deity maṇḍala of *Hevajra* is concerned, he mentions the long Kaṁ tshang bka' brgyud line that comes from the Four Currents, passed through the early

---

[323] The name of the author of the text is unknown, but he refers to "the master's father" with a note indicating that Chos rdor is meant (NKSB, 2: 131). NKSB, 2: 132: *skye shi bar ma do dang/ rmi lam bar ma do dang/ srid pa bar ma do dang gsum yin/ bar do rnam pa gsum du bsre 'pho gnyis kyi man ngag bya gsungs/ bsre ba rnams ni bsgoms nas sangs rgya ba'i thabs yin/ 'pho ba ni ma bsgoms par sangs rgya ba'i thabs yin/ de la dang po bsre ba'i man ngag bya ba de yin/ de la skye shi bar do la bskyed rdzogs gnyis kyi man ngag dang bsre/ rmi lam bar do la rmi lam dang bsam gtan bsre/ srid pa bar do la 'od gsal dang bsre ba'o.*

[324] ST1, 7: 4-5; ST3, 32: 5-6.

[325] The name Thar pa'i lam ston is a special reference to Mar pa's lifestory. Although in general this refers to Śāntibhadra, whose name Mar pa wants to hide from gNyos Lo tsā ba, in another text—in the autobiographical introduction of a *gter ma* hidden by Mar pa in his house in Sras mkhar—this term refers to Nāropa (Ducher 2016a, 101). This is probably what is meant here.

rNgog and the Third Karma pa, and its associated short lineage, going straight from Vajradhara to Tilopa, Nāropa, and Mar pa. The long lineage reads as follows:[326]

> Vajradhara → Jñānaḍākinī → Vajragarbha → Saraha → Nāgārjuna → Āryadeva → Candrakīrti → Mātaṅgī →Tilopa → Nāropa → Mar pa → rNgog Chos sku rdo rje […]

Kong sprul then adds additional lineages: that of Padmavajra's tradition coming from Nāropa,[327] that of Maitripāda,[328] that of Śāntipa (Ratnākaraśānti), and several others, not all of them passing through Mar pa.[329] He does not only present the Indian masters, but all Tibetan masters until himself. The reason for this diversity is that he received *Hevajra* from several sources, which were themselves combinations of several lineages.

In conclusion, and as is clear in Mar pa's biographies, Mar pa received *Hevajra* from two main sources, Nāropa and Maitripa, as well as in visions from Śāntipa. He transmitted this teaching rich in oral instructions and with a robust exegetical literature to several of his disciples. The lineage that gained the largest following was the one initiated by Chos rdor, in which the three maṇḍalas of *Hevajra*, *Nairātmyā* and *Pañjara* played a key role, becoming three of the seven maṇḍalas of the rNgog.

---

[326] KGNDdkar chag, 19: 3-4.

[327] KGNDdkar chag, 19: 5: Vajradhara, Nairātmyā, Anaṅgavajra (*yan lag med pa'i rdo rje*), Padmavajra and Indrabuthi, Mar pa.

[328] KGNDdkar chag, 19: 5-6: Vajradhara, Nairātmyā, Virūpa, Kālavirūpa, Ḍa ma ru pa, Advayavajra (= Maitripa), Mar pa. This lineage does not figure in Maitripa's main lineages as outlined above. An alternative lineage not going through Mar pa but descending from Sahara and Śavari is also mentioned.

[329] The lineages of *Hevajra*, *Nairātmyā* and *Panjara* are in KGNDdkar chag, 18-23.

2.2.1. *Catuṣpīṭha*[330]

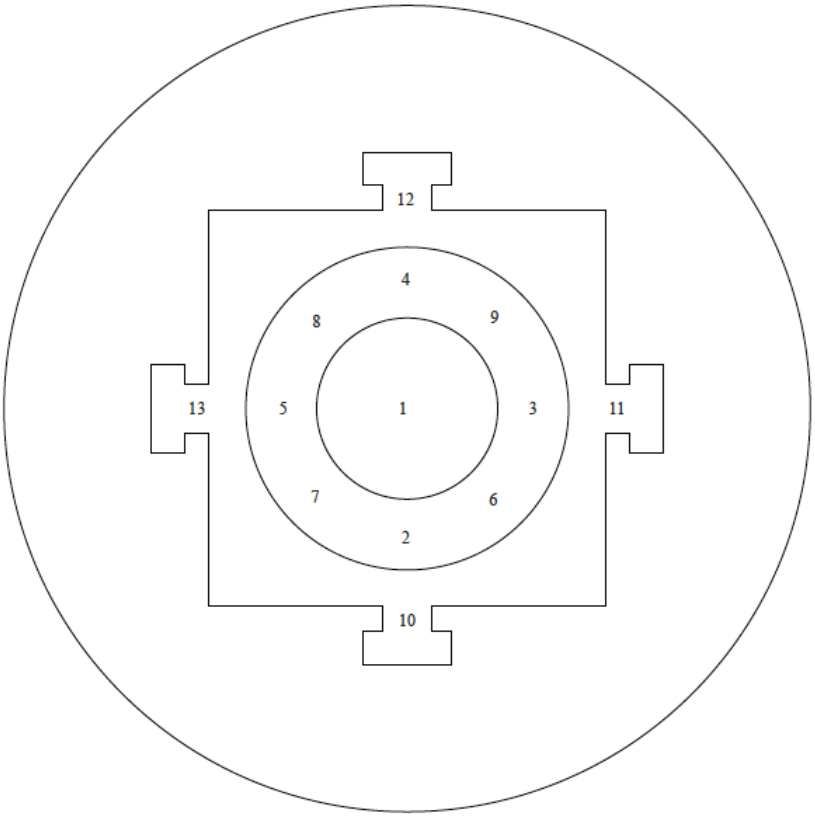

Plate 6: *Catuṣpīṭha* Maṇḍala: 13-deity *maṇḍala* of Jñāneśvarī with 12 *ḍākinī*s (*ye shes dbang phyug ma lha bcu* gsum). Tachikawa 1991, 155 (maṇḍala 88).

The rNgog tradition of *Catuṣpīṭha*

> (For the middling surrender, he offered ten volumes, foremost among which the *Ratnakūṭa*, as well as everything he could bring to lHo brag). He received a second cycle containing:
> - the *Śrīcatuṣpīṭha root tantra*;
> - the *Great Explanatory Tantra* and the **Mantrāṃśa*;
> - the *Maṇḍalopāyikā*;
> - Yogāmbara and Jñāneśvarī;
> - the commentary on the [mantra beginning with] **ekavṛkṣa*;
> - the *Kakṣapuṭa*; the *Catuṣpīṭhacatustattva*; the *Appearance of Perfect Knowledge*; and the *Death Cheating*.[331]

---

[330] Szantó 2012, 25-26, says that *Catuṣpīṭha* is the most widespread form, but *Catuḥpīṭha* is also attested.

[331] ST1, 9: 3-4; ST2, 34: 2-3.

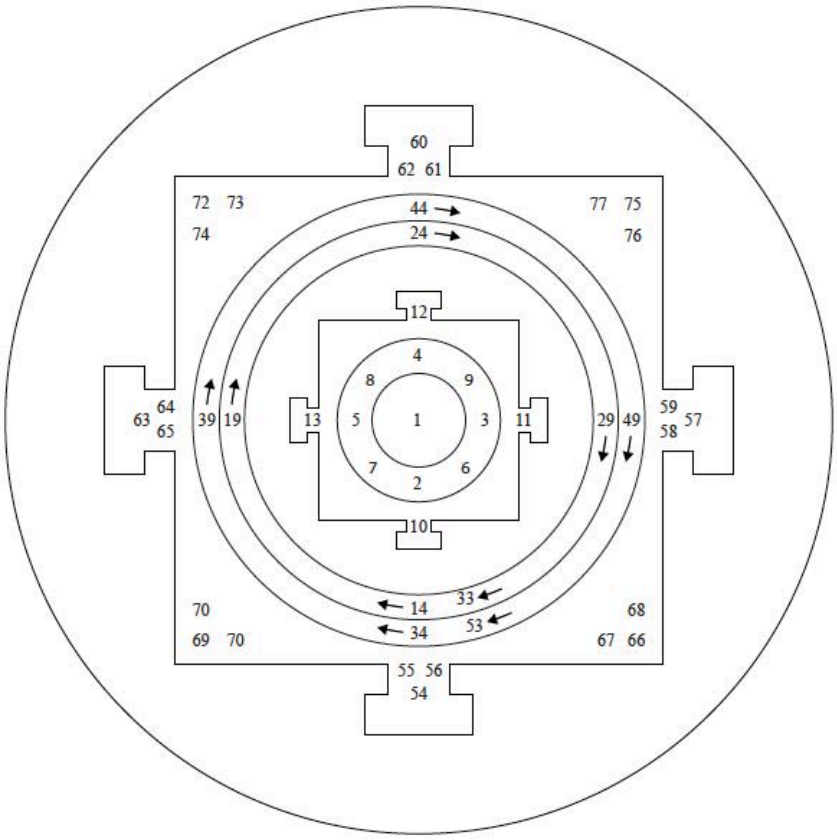

Plate 7: *Catuṣpīṭha* Maṇḍala: 77-deity maṇḍala of Yogāmbara, the male form of Catuṣpīṭha, with 76 *ḍākinī*s and *ḍāka*s (*gdan bzhi'am rnal 'byor nam mkha' lha don bdun*). Tachiwaka 1991, 152-154 (maṇḍala 87)

After his second donation, Chos rdor received from Mar pa a cycle containing teachings related to the *Catuṣpīṭhatantra*, a yoginī tantra less well diffused than the *Hevajratantra*, and for which Mar pa's tradition became one of the most widespread in Tibet. For a general presentation of this tantra, its title, sources, pantheon, language and contents, one may refer to the entry by Péter-Dániel Szántó in *Brill's Encyclopedia of Buddhism*, an excellent introduction to a very complex tantra.[332] In what follows, I will present the *Catuṣpīṭha* transmission that reached the rNgog and that became two of their most important traditions, also mainly availing myself of Szántó's work, primarily his 2012 dissertation.[333]

According to most sources, Chos rdor received from Mar pa the root tantra[334] together with two explanatory tantras, called the *Great Explanatory Tantra* (*bshad rgyud chen mo*)[335] and

---

[332] Szántó 2015b.

[333] Szántó 2008, Szántó 2012 and 2015b.

[334] Tōhoku 428. In the *bKa' 'gyur*, this was translated by Gayādhara and 'Gos Khug pa Lhas btsas. The two also translated Bhavabhaṭṭa's commentary on *Catuṣpīṭha*. According to Szántó, this translation mirrors a post-exegetic transmission of the text and he did not use it for his edition of the root tantra. He also found that their translation of Bhavabhaṭṭa's commentary is enlarged and sometimes rather free.

[335] This may refer to the *Vyākhyātantra*, Tōhoku 430. See Szántó 2012, 89-91.

the **Mantrāṃśa*.[336] These two texts are extant and considered being tantras only in Tibetan. The **Mantrāṃśa* is in fact the fourth chapter of the *Maṇḍalopāyikā*, the "ritual of the maṇḍala" (*dkyil 'khor cho ga*), which is the next work listed as being part of the transmission.[337] This initiation ritual was responsible for thoroughly reshaping the pantheon of the cult, by replacing the main female deity of the cult as defined in the root tantra, Jñānaḍākinī, with a male consort, Yogāmbara. It proved so influential that it practically overtook the role of the *Catuṣpīṭhatantra* as the main scripture of the cult. This is demonstrated in the rNgog pa tradition of *Catuṣpīṭha* by the fact that the *Maṇḍalopāyikā* is the most commented upon text.

The *Rosaries* then mention Yogāmbara and Jñāneśvarī. Yogāmbara is the central figure of the maṇḍala in the initiation ritual and Jñāneśvarī is the central figure in the root *Catuṣpīṭhatantra*. It is likely that in the present case, the names refer to the *sādhana*s centered on either the male figure, Yogāmbara (*rNal 'byor nam mkha'*), or the female figure, Jñāneśvarī (*Ye shes dbang phyug ma*), also called Jñānaḍākinī (*Ye shes mkha' 'gro ma*). There are several *sādhana*s in the *bsTan 'gyur* that could be referred to by the generic denomination of the *Rosaries*. As in practices from the rNgog pa tradition, the most recurring author mentioned in the Yogāmbara *sādhana*s is rNam par rgyal ba'i dbang po'i sde (*Vijayendrasena), it is probably his *Yogāmbarasādhanopāyikā*[338] that is referred to here.[339] As for the Jñāneśvarī *sādhana*, this may either refer to Āryadeva's *Jñāneśvarīsādhana*[340] or to the **Catuṣpīṭhasādhanopāyikā* of Bhavabhaṭṭa.[341]

Finally, several satellite texts are said to have been received by Chos rdor. First, there is the **Ekavṛkṣādipañjikā* attributed to Āryadeva. This is a commentary on the mantra beginning

---

[336] The name is given as *man tra aṁ sa* in Tibetan, also translated as *dPal gdan bzhi pa'i bshad pa'i rgyud kyi rgyal po sngags kyi cha*. Tōhoku 429. See Szántó 2012, 89, and Szántó 2008.

[337] See Szántó 2008 and Szántó 2012, 123-152. He explains that there were three versions of that text, the third (Tōhoku 1613) being the most popular. Although its long title is *rGyud kyi rgyal po dpal gdan bzhi pa zhes bya ba'i dkyil 'khor gyi cho ga snying po mdor bsags pa*, it was generally known in Tibet with the short title *sNying po mdor bsags pa*.

[338] *rNal 'byor nam mkha'i sgrub thabs*, Tōhoku 1619. According to Szántó 2012, 170-171 and Szántó 2008, 4, the *Yogāmbarasādhanopāyikā* is attributed to Amitavajra in the Sanskrit manuscripts although it is attributed to rNam par rgyal ba'i dbang po'i sde (*Vijayendrasena) in the Tibetan version. rNam par rgyal ba'i dbang po'i sde was a Newar scholar (see Lo Bue 1997, 637) and according to Szántó 2008, 4, n. 15, Amitavajra may be his initiation name. There are many early witnesses for this text, which prove its popularity in Nepal.

[339] Another possible candidate for the Yogāmbara *sādhana* may be the **Catuṣpīṭhasādhanopāyikā* (*rnal 'byor gyi rgyud dpal gdan bzhi pa'i sgrub thabs*), Tōhoku 1610. It was composed by Āryadeva, whose name is often mentioned in the rNgog pa tradition and who was the author of Tōhoku 1612, 1613 and 1614. Szántó 2012, 159-160, states that the text's structure in many ways foreshadows the presumably later work of Amitavajra (Tōhoku 1619). It was translated by Kamalagupta and Rin chen bzang po.

[340] Tōhoku 1612. Szántó 2012, 160, considers that the **Jñāneśvarīsādhana* (*Ye shes dbang phyug ma'i sgrub thabs*) may be falsely attributed to Āryadeva in the colophon as the text does not say anything about Yogāmbara or the extended *maṇḍala*, which are the hallmark of the *Catuṣpīṭha* Āryadeva. It is, however, very similar to Āryadeva's *sādhana* of Yogāmbara (Tōhoku 1610).

[341] *dpal gdan bzhi pa'i sgrub pa'i thabs*, Tōhoku 1616. Szántó 2012, 162-163. There exist two further *sādhana*s on the two deities in the *bsTan 'gyur* (Tōhoku 1611 and 1618), but these were translated in Sa skya during the 13th century, and are therefore not part of Mar pa's tradition of *Catuṣpīṭha*.

with **ekavṛkṣa* to be recited during the offering of *gtor ma*s.[342] Then is the *Kakṣapuṭa* attributed to Nāgārjuna, an alchemical/medical work without direct link to *Catuṣpīṭha* but that figures among the *Catuṣpīṭha* texts in the *bsTan 'gyur*.[343] The next text, the *Fourth Suchness* (*Catuṣpīṭhacatustattva*) is an "essential teaching" on the *Catuṣpīṭhatantra* by Jitāri (Atiśa's guru?).[344]

The identity of the last two texts is less definite. The *Appearance of Perfect Knowledge* may be the **Catuṣpīṭhajalahoma*, an oblation in water related to *Catuṣpīṭha*, as the words "appearance of perfect knowledge" appear in the colophon to that text.[345] Finally, the *Death Cheating* probably refers to Vāgīśvarakīrti's *Mṛtyuvañcana*.[346] There is a commentary by rNgog Zhe sdang rdo rje on the subject, explicitly referring to that text and indeed related to the *Catuṣpīṭha* cycle.

As regards the translations of the *Catuṣpīṭha* cycle used within the rNgog pa tradition, the *Rosary of Jewels* (ST2) states:[347]

> The *Catuṣpīṭhatantra* was translated by Smṛtiśrī[jñāna]. The *Great Commentary* was translated by the Venerable [Mar pa] himself, and the *Fourth Suchness* was translated by 'Gos. […] The initiation ritual of *Catuṣpīṭha* was translated by Lo tsā ba gZhon nu rgyal mtshan.

These translations are quite different than what is indicated in the sDe dge *bKa' 'gyur* and *bsTan 'gyur*. As Szántó remarks, the *Catuṣpīṭha* cult was a malleable corpus in the 10th and 11th centuries.[348] It is therefore probable that as the versions transmitted by the Indian and Newar masters were quite different, there were several Tibetan translations done over the years. As evidenced in PT 849 found in Dunhuang, the *Catuṣpīṭhatantra* was already known in Tibet in the late 10th century, which may correspond to the translation made by

---

[342] Tōhoku 1614. See Szántó 2012, 154-159. The Tibetan title of the text is "a commentary of the difficult points on the [mantra beginning with] *ekavṛkṣa* revealing the profound meaning[s] of the *Catuṣpīṭha*" (*gDan bzhi pa'i zab don ston pa shing gcig gi dka' 'grel*)

[343] *mChan khung gi sbyor ba*, Tōhoku 1609. According to Szántó 2012, 161, the reason for the inclusion of this text in the *Catuṣpīṭha* cycle of the *bsTan 'gyur* is that its first verse is quoted in Kalyāṇavarman's *Pañjikā* (one of the two commentaries on the root tantra available in Tibetan). The inclusion in this list from the *Rosaries* may prove that it was elaborated on the basis of the *bsTan 'gyur*'s content rather than on an actual knowledge of what exactly Mar pa gave to Chos rdor.

[344] *De nyid bzhi pa*, Tōhoku 1620. See Szántó 2012, 165-167.

[345] Tōhoku 1617: *Dpal gdan bzhi pa'i chu'i sbyin sreg*. The Black Hat Tanjur, 468, reads: *yang dag ye shes snang ba zhes bya ba'i sgrub thabs le'u bzhi pa / chu'i sbyin sreg slob dpon bha ba bha tras mdzad pa/ tshul khrims gzhon nu'i 'gyur*. See Szántó 2012, 163-165.

[346] *'Chi ba bslu ba'i man ngag*, Tōhoku 1748. See a study of this text in Schneider 2010. There is also a translation in Walter 2000. The commentary by Zhe sdang rdo rje (rNgog mDo sde) is in NKSB, 6, 1-90. It figures among other texts of the *Catuṣpīṭha* cycle.

[347] ST1, 19: 6-7.

[348] Szantó 2012, 35-47.

Smṛtiśrījñāna and said to be used by the rNgog.[349] In the *bKa' 'gyur*, the translation is said to be the work of 'Gos Khug pa lhas btsas, who may have revised it, or made an alternative translation. Smṛtiśrījñāna is said in some *bKa' 'gyur* and *bsTan 'gyur* colophons to be the translator of both the explanatory tantra (Tōhoku 430)[350] and of a commentary, the *Pañjikā* of Kalyāṇavarman (Tōhoku 1608). The translation of this explanatory tantra, called the *Great Commentary* in the *Rosaries*, is attributed to Mar pa. As Smṛtiśrījñāna's translation was revised by Bu ston, it is possible that Mar pa and the rNgog, who were major proponents of that tantra, did not judge it satisfying, and had their own version, whose trace, to my knowledge, is lost. The *Fourth Suchness* (Tōhoku 1620), along a few other texts, were indeed translated by 'Gos.

Although in the *Rosaries* the list of translations goes on to *Mahāmāyā*, ST1 later mentions a maṇḍala ritual, which ST2 specifies to be the initiation manual of *Catuṣpīṭha*, i.e. the *Maṇḍalopāyikā*. As explained by Szántó,[351] there were probably three Sanskrit versions of that text, and it was the last that became the heart of the *Catuṣpīṭha* transmission. The *bsTan 'gyur* version (Tōhoku 1613) was initially translated by 'Gos Khug pa lhas btsas, but Bu ston felt it needed revision. It was finally the 8th Si tu (1699/1700-1774) who undertook the project on the basis of a newer Nepalese manuscript.[352] 'Gos's version, if the *Rosaries* are correct, was not used in Mar pa's tradition, as the ritual is said to be translated by Lo tsā ba gZhon nu rgyal mtshan, whose identity is not clear. This may be a translation of the *Maṇḍalopāyikā*, perhaps done in Nepal, used by Mar pa and the rNgog but that did not find its way into the *bsTan 'gyur*.

The rNgog lineage of *Catuṣpīṭha*

When Mar pa reached Nepal, one of the first transmissions he was granted was *Catuṣpīṭha*. Several lineages are mentioned in ST1:[353]

> - Nāgārjuna; Āryadeva; Tilopa; Nāropa; Mar pa.
> - Also: Kalyāṇavarman (dGe ba'i go cha); Senavarman (sDe'i go cha); Vijayendra[sena] (rNam rgyal dbang po); Thang chung pa; Mar pa; Chos kyi rdo rje.
> - Also: ḍāki[nī] Kalpabhadrī; Telo; Nāro; Mar pa; […]

---

[349] See Kapstein 2006, 19-20, n. 31 and 32. Kapstein estimates that PT 849 may have been written around 975 (pp. 11-12). ST1 states that "*Catuṣpīṭha* texts were translated by Smṛtiśrījñāna," but this is only the case of the root tantra according to ST2.

[350] *Catuḥpīṭhavikhyātatantrarāja* (*dPal gdan bzhi pa'i rnam par bshad pa'i rgyud kyi rgyal po*). Tōhoku 430. Dergé Kanjur, vol. NGA, folios 260r.3-304r.7. Tr. by Smṛtijñānakīrti. Revised by Bu ston.

[351] Szántó 2012, 127.

[352] Si tu included that translation in his *gSung 'bum*, 7: 165-227. As explained in Szántó 2008, the *Maṇḍalopāyikā* was believed by Tibetans to be the work of Āryadeva (this is indeed what is stated in commentaries on that text in the rNgog traditions), but Si tu corrected that misunderstanding in his revision, rightly attributing the work to Caryāvratipāda, without however emending the attribution in the sDe dge *bsTan 'gyur*, which edition he supervised.

[353] ST1, 7: 6-7; ST2, 32: 6-7. It is not mentioned in ST2.

- Short lineage: *ḍākinī* Cluster of Banana Tree (Chu shing gi snye ma can); and Mar pa [...]

The second lineage mentioned in ST1 is omitted in ST2 and may chronologically be the first Mar pa received. It is made up of Newar masters from the Katmandu valley. The *Rosaries*,[354] as many other biographies of Mar pa, state that Mar pa received *Catuṣpīṭha* from sPyi ther ba when he first visited Nepal. sPyi ther ba was one of the Pharphing (*pham thing pa*) brothers, as was Thang chung pa.[355] In the introduction to the KGND, Kong sprul considers that this lineage must be inaccurate.[356] One reason for that judgment may be that he relied on Padma dkar po's work,[357] which has Tilopa and Nāropa precede Kalyāṇavarman,[358] which is impossible as Thang chung pa is said to be a disciple of Nāropa. Kong sprul instead provides the following lineage:[359]

> Nāropa; the Newar Kalyāṇavarman and sPyi ther pa rNam rgyal dbang po; the two to Mar pa.

Kalyāṇavarman was the author of a *Catuṣpīṭha* commentary (Tōhoku 1608) translated by Smṛtijñānakīrti, who was active in the late 10th century-very early 11th century.[360] His commentary must therefore date to the mid-10th century, and he cannot be considered a disciple of Nāropa and a master of Mar pa. The lineage given in ST1 is therefore more likely, although it is strange–and exceptional–that ST2 did not copy it.

Mar pa received again *Catuṣpīṭha* from Nāropa. According to the *Rosaries*, Tilopa held two lineages coming from Āryadeva and Kalpabhadrī. Although Āryadeva's master is said to be Nāgārjuna, it seems unlikely that this author, who was active in the 10th century and composed several texts related to *Catuṣpīṭha* was the Āryadeva of the *Guhyasamāja* tradition (active in the 9th c.), although he was considered as such in the tradition.

Kong sprul differs also from ST1 as far as Kalpabhadrī is concerned. According to him, Mar pa received *Catuṣpīṭha* directly from the *ḍākinī* Adorned with Human Bone Ornaments (*mi rus kyi rgyan cha can*) as well as from the *ḍākinī* Cluster of Banana Tree (*chu shing gi snye ma can*), who was Maitripa's consort. Although this may imply that, for Kong sprul, Cluster of Banana Tree and Adorned with Human Bone Ornaments are distinct, this is generally not the case in the biographies (see section II.1.2 for details).

---

[354] ST1, 3: 2.

[355] See mDo sde's biography of Mar pa, MKNT, 175.

[356] KGNDdkar chag, 32: 1.

[357] "gDan bzhi yum bka'i cho ga," *Pad dkar gsung 'bum*, 17: 641-642. The lineage there is identified as that of the empowerment of Yogāmbara (*gdan bzhi'i yab bka'i dbang*, p. 642).

[358] He was the author of a *Catuṣpīṭha* commentary, called in Tibetan *'Phags pa gdan bzhi pa'i rnam par bshad pa*, Tōhoku 1608. According to Szántó 2012, 116, "several of the sub-chapter colophons as well as the final colophon suggest that the title of the work is *Catuṣpīṭhāloka*, but the verse describing the circumstances of writing refers to a *Pañjikā.*"

[359] KGNDdkar chag, 31: 5-6.

[360] See section I.2.2.1 and Szántó 2012, 115-119

We thus see that Mar pa's lineage of *Catuṣpīṭha* is rather imprecise. Anyway, he gave it to Chos rdor, who passed it on to his son. The practice, in the shape of two maṇḍalas of 13 and 77 deities centered around Jñāneśvarī and Yogāmbara evolved into two of the major rNgog transmissions, featuring prominently in the seven maṇḍalas of the rNgog. In terms of the quantity of the literature devoted to it, it was the second most-commented upon cult in the lineage, after that of *Hevajra*.

2.2.3. ***Mahāmāyā***

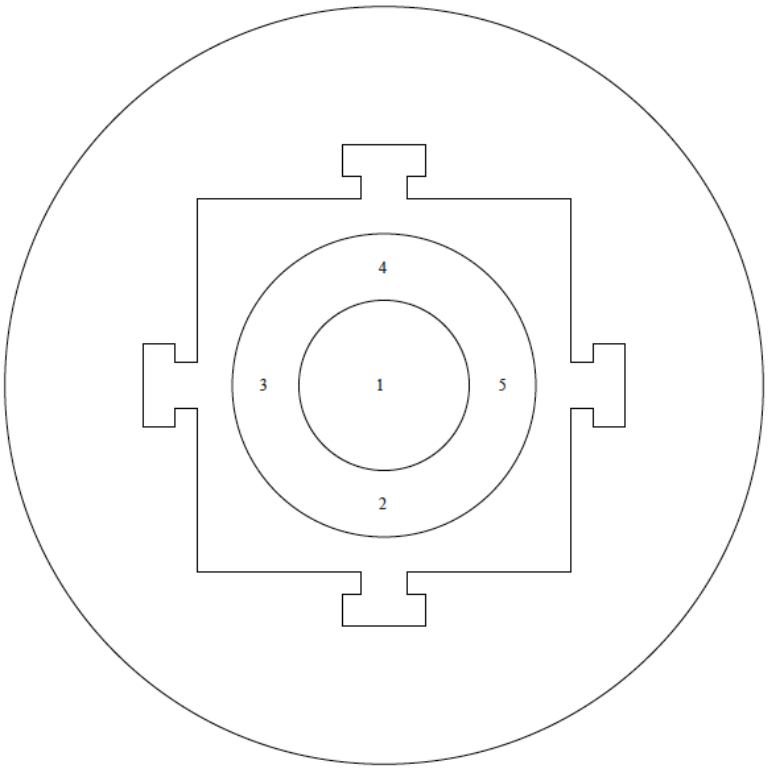

Plate 8: Five-deity maṇḍala of *Mahāmāyā* (*sgyu ma chen mo lha lnga*): Sangs rgyas he ru ka with 4 *ḍākinī*s. Tachikawa 1991, 151-152 (maṇḍala 86)

> (For the last great surrender, he offered everything he could bring to lHo brag, most notably a herd of hundred sheep and young goats). He received a third cycle containing the three-chapter Glorious *Mahāmāyātantra*; the three extensive and condensed [*sādhana*s] on the creation stage; the duo of root text and commentary of the *Key-Instructions on Suchness*; the maṇḍala ritual; and a *gtor ma* ritual.[361]

The third cycle is that of *Mahāmāyā*, which, in Mar pa's tradition, comes from Kukuripa. Mar pa received it from Śāntibhadra, otherwise known as Kukuripa Junior, as the Indian *siddha* gained realization based on that practice.[362] According to Tāranātha, Mar pa also received

[361] ST1, 9: 4-5; ST2, 34: 3-4.

[362] As explained in section II.1.2, although some sources (most *Mahāmāyā* commentaries by the rNgog lineage, see below for a listing) consider Śāntibhadra and Kukuripa to be identical, others state that Mar pa met Kukuripa

other traditions available at the time in India, those of Ratnākaraśānti and Kṛṣṇa (*Nag po*), as well as Nāropa's key instructions, but the lineage he spread in Tibet is that of Kukuripa ornamented by Nāropa's instructions.[363] The rNgog exegesis on the tantra makes no allusion to the other traditions.

The three commentaries on *Mahāmāyā* composed in the rNgog pa lineage,[364] all based on rNgog mDo sde's outline of the tantra[365] and his extensive teachings, state that Kukuripa's transmission is made up of seven teachings. They are listed in rNgog bSod rnams don grub's (15th c.) commentary:[366]

> First, to ripen an unripe basis, one transmits the empowerment by progressively clarifying the *maṇḍala* ritual. Then, there are the generation and perfection, which are the path that liberates. As for the generation phase, [Kukuripa] composed three different rituals, extensive and condensed. For the perfection phase, he composed the *Key-Instructions on Suchness*. Seeing that this would be difficult to understand by future disciples, he composed a commentary on the *Key-instructions on Suchness*. Thus, with the three extensive and condensed *sādhana*s on the generation phase, the duo of the root text and commentary on the perfection phase, the sixth – the maṇḍala ritual – and on top the tantra, there are seven which are known as the seven rituals of Kukuripa.

The *Rosaries* mention the same transmissions, adding a *gtor ma* ritual. The main text of the cycle is the root tantra, a short three-chapter *yoginī* tantra,[367] for which there is no specific explanatory tantra. There are several commentaries on the tantra in the *bsTan 'gyur*,[368] but

---

but received the transmission from Śāntibhadra, who was the main holder (*bdag po*) of Kukuripa's heritage in India at the time. Such is clear in Mar pa's biographies, and Tāranātha professes that it is a mistake to consider the two as one. Kong sprul is also of that opinion (Kongtrül & Ngawang Zangpo 2010, 304).

[363] Tāranātha's "dPal rgyud kyi rgyal po sgyu 'phrul chen mo ma hā mā ya'i rgya cher bshad pa de kho na nyid kyi sgron ma." In *gSung 'bum dpe dur ma*, 22: 60-61.

[364] Thogs med grags: *dpal sgyu 'phrul chen mo'i rgyud kyi rnam par bshad pa bla ma'i bka' yang dag pa gsal ba*, NKSB, 10: 1-65; mGar ston bKra shis dbang phyug: *ma hā ma ya'i rgyud kyi 'grel pa*, NKSB, 18: 1-82; rNgog bSod nams don grub: *sgyu 'phrul chen mo'i 'grel pa nyi ma'i 'od zer*, NKSB, 14: 1-142.

[365] Zhe sdang rdo rje: *dPal sgyu ma chen mo'i rgyud kyi bsdus don*, NKSB, 6: 219-221.

[366] *sGyu 'phrul chen mo'i 'grel pa nyi ma'i 'od zer*, NKSB, 14: 14-15: *dang por gzhi ma smin pa smin par byed pa/ dbang bskur ba la/ dkyil 'khor gyi cho ga rim pa gsal ba mdzad/ grol bar byed pa'i lam bskyed rdzogs gnyis kyi bskyed rim la/ sgrub thabs rgyas bsdus mi 'dra ba gsum mdzad/ rdzogs rim la de kho na nyid kyis man ngag mdzad/ de ma 'ongs pa'i rten gyi gang zag rnams kyis go dka' bar gzigs nas/ de kho na nyid kyi man ngag gi 'grel pa mdzad pas/ de ltar na bskyed rim la sgrub thabs rgyas 'bring bsdus gsum rdzogs rim la rtsa 'grel gnyis dang lnga/ dkyil 'khor gyi cho ga dang drug/ de'i steng du rgyud dang bdun po de la ku ku ri pa'i cho ga bdun du grags pa yin gsungs*. See NKSB, 10: 8 for Thogs med grags's commentary, and NKSB, 18: 10 for mGar ston's. Both were mDo sde's disciples.

[367] *Mahāmāyātantrarāja* (*Dpal sgyu 'phrul chen po zhes bya ba'i rgyud kyi rgyal po*). Tōhoku 425, Dergé Kanjur, vol. *nga*, 333-341. This is translated in English from the Tibetan in the website of the 84.000: http://read.84000.co/#UT22084-080-009/title (assessed on 2017/09/24).

[368] These are Tōhoku 1622 by *Durjayacandra (*Mi thub zla ba*), Tōhoku 1623 by Ratnākaraśānti (*Rin chen 'byung gnas zhi ba*), Tōhoku 1624 by *Kṛṣṇasamayavajra (*Nag po dam tshig rdo rje*) and Tōhoku 1625 by *Vibhūṣita (*Rgyan pa*).

none by Kukuripa, and indeed no commentary is mentioned in the transmission received by Chos rdor.

The "three extensive and condensed phases of creation" are difficult to pinpoint. There are three *sādhana*s composed by Kukuripa in the *bsTan 'gyur*: Tōhoku 1627, 1628 and 1629.[369] Lengthwise, it would seem that the most extensive is Tōhoku 1627 (four folios and two lines), the middling one Tōhoku 1629 (less than 3 folios) and the condensed one Tōhoku 1628 (one folio). Kong sprul, however, points to the middle length *sādhana* as being the *He ru ka phyag rgya gcig pa'i sgrub thabs* (Tōhoku 1646).[370] He calls Tōhoku 1628, the *Vajrasattvasādhana*, the "utterly unelaborated instructions" (*shin tu spros pa med pa'i man ngag*), as does the Third Karma pa in his catalogue of the *bsTan 'gyur*, thus counting that *sādhana* among the three.[371] It would follow that Tōhoku 1629 is not part of the group. It is difficult to decide as none of the rNgog commentaries elaborate on the identity of the three. In rNgog Rin chen dpal bzang po's *sādhana*, the extensive one is pointed out as the main source.[372]

The *Key-Instructions on Suchness* and its commentary are two texts on the perfection phase attributed to *Sumatigarbha (*Blo bzang snying po*)[373] in the *bsTan 'gyur*.[374] In the rNgog lineage, these two texts belong to Kukuripa's tradition. In ST2,[375] these perfection stage practices are spelled out in a gloss as being "inner heat; the illusory body; lucid dreaming; luminosity; transference; and the intermediate state."[376] The maṇḍala ritual transmitted to Chos rdor by Mar pa is Kukuripa's.[377] The last item in the transmission is his *gtor ma* ritual. This is not available in the sDe dge *bsTan 'gyur*, but is mentioned in Rang byung rdo rje's catalogue[378] and features in the Nar thang *bsTan 'gyur*.[379]

All texts of the *Mahāmāyā* cult used in the rNgog tradition, except the two on suchness (translated by Lo chen Rin chen bzang po), were translated by 'Gos Khug pa lHas brtsas, who

---

[369] *Mahāmāyātantrānusāriherukasādhana* (*sGyu 'phrul chen mo'i rgyud kyi rjes su 'brang ba'i he ru ka'i sgrub pa'i thabs*). Tōhoku 1627. Dergé Tanjur, 22: 456: 1-460: 2; *Vajrasattvasādhana* (*Rdo rje sems dpa'i sgrub thabs*), Tōhoku 1628. *Id.*, 460: 2-461: 2. (1 folio); *Ma hā mā yā'i sgrub thabs rmongs pa sgrol ba'i brtag pa*. Tōhoku 1629, *id.*, 461: 2-463: 7. All three were translated by Anīlavajra and 'Gos Lhas btsas.

[370] KGND, 3: 376: 2: *'bring po'i lugs he ru ka phyag rgya gcig pa'i sgrub thabs*. In the *bsTan 'gyur*, no author is indicated for this text (Dergé Tanjur, vol. 22, 617: 1-618: 5).

[371] K3 Tanjur, 470. In this text, Rang byung rdo rje only mentions two *sādhana*s by Kukuripa.

[372] NKSB, 11: 196.

[373] He is called 'Gro bzang snying po in K3 Tanjur, 470.

[374] *Tattvopadeśa* (*De kho na nyid kyi man ngag*). Tōhoku 1632. Dergé Tanjur, vol. 22, ff. 245r.7-246v.3; *Tattvopadeśavṛtti* (*De kho na nyid kyi man ngag gi 'grel pa*). Tōhoku 1633, *id.*, ff. 246v.3-252v.6. Both were translated by Kamalagupta and Rin chen bzang po.

[375] NKSB, 1: 47.

[376] See Kongtrül, Guarisco & McLeod 2008, 183-186 and 387-392 for instructions on the *Mahāmāyā* perfection phase.

[377] *Mahāmāyāsādhanamaṇḍalavidhi* (*Sgyu 'phrul chen mo'i sgrub pa'i thabs kyi dkyil 'khor gyi cho ga*), Tōhoku 1630.

[378] K3 Tanjur, 471.

[379] Nar thang, *rGyud 'grel, mu*, 511-513.

also received *Mahāmāyā* from Mar pa's master Śāntibhadra.[380] Despite 'Gos's pioneering work, it is likely that some of his translation were not considered adequate: his tradition did not spread in Tibet, and the translation of the root text was rapidly revised by Klog skya Shes rab rtsegs, in collaboration with rNgog Chos rdor.[381] The *Mahāmāyā* tradition gifted by Mar pa to rNgog Chos rdor eventually became the most successful in Tibet, and was one of the seven maṇḍalas of the rNgog.

2.2.4. ***Dud sol ma (Dhūmāṅgārī)***

(For a representation see the painting closing the present dissertation, p. 522).

> The master had three protectors – Ka ka rtsal, Thod 'phreng can and Dud sol ma. [rNgog] requested all three, but [Mar pa] replied: "I will not give all three: choose one!' [rNgog] thought: "Wherever the master goes, on the evening he makes a *gtor ma* of Dud sol ma, and throws it towards the next day's destination; also, she is Nāropa's protector." So, having chosen Dud sol ma, this is what he requested. The master told him: "Don't change your mind, this is a perfect interdependent connection; my master Nāropa indeed said: "You will have four great disciples, and this goes in particular for the one who will uphold the explanation lineage."[382]

Some, such as Tshar chen and the Fifth Dalai Lama, argue that *Dud sol ma* should be included within the seven maṇḍalas instead of *Nāmasaṃgīti*.[383] Kong sprul considers that even though the rNgog transmission of *Nāmasaṃgīti* is not a proper highest yoga transmission (the *gSang ldan* tradition is based on a yoga tantra interpretation of *Nāmasaṃgīti*), Chos rdor received the highest yoga blessing of *Nāmasaṃgīti* from Mar pa, hence his tradition qualifies as highest yoga although it is externally yoga.[384] The Dud sol ma transmission, on the other hand, is not a proper highest yoga tantra but a protective deity of the *Catuṣpīṭhatantra*, therefore she does not qualify as a maṇḍala and cannot be included in the seven maṇḍalas although her transmission comes from Mar pa, unlike that of *Nāmasaṃgīti*.

Dud sol ma is the hallmark of the rNgog tradition and was considered the specific protective deity predicted by Nāropa for their exegetical lineage. Her full name is "the Great Black Glorious Goddess (*śrī devi*), Charnel Ground Owner, Terrifying Charcoal Smoke-[colored] Lady" (*dPal ldan lha mo nag mo chen mo dur khrod kyi bdag mo 'jigs byed dud pa'i sol ba*

---

[380] See ST1, 19: 6: "*Mahāmāyā* was translated by 'Gos and revised by Klog skya Shes rab rtsegs."

[381] See section II.3.1 for details.

[382] ST1, 9.

[383] DL5 *thob yig*, 1: 369a.

[384] KGNDdkar chag, 36-37.

can), known also simply as Dud sol ma (skt: Dhūmāṅgārī).[385] Another widely-used name is "Powerful Lady of the Desire Domain" (*'Dod khams dbang phyug ma*).

She was initially seen as the protective deity of *Catuṣpīṭha* and *Hevajra*, and later became the protective deity of the rNgog pa bka' brgyud tantric lore in general. Her name can be found in several *Catuṣpīṭha* texts, chiefly, among the ones used in the rNgog tradition, the *Maṇḍalopāyikā* (Tōhoku 1613) and rNam par rgyal ba'i dbang po'i sde's *sādhana* of Yogāmbara (Tōhoku 1619). We know of her practice mainly through the compilation by Kong sprul available in the KGND, which contains old texts by the rNgog. The cycle begins with a catalogue composed by the founder of the Tshar pa branch of the Sa skya school, Tshar chen Blo gsal rgya mtsho (1502-1566), who received the full transmission from rNgog bSod nams bstan 'dzin, the last known rNgog scion to hold the lineage in the gZhung valley.[386] According to this catalogue and to the texts included in the KGND (presumably on the basis of the catalogue), the *Dud sol ma* practice in the rNgog tradition takes as authoritative two scriptural texts: the "general tantra of Ma mos" (*ma mo spyi'i rgyud*);[387] and the "specific tantra of Dud sol ma" (*dud sol ma'i sgos kyi rgyud*).[388] The latter is made up of fifteen chapters of an exchange between Vajrapāṇi and the Buddha. Although it looks like a tantra, it is not included in either the *bKa' 'gyur* nor the *bsTan 'gyur*.[389]

The story of Chos rdor choosing Dud sol ma among three protectors narrated in the *Rosaries* can be found *in extenso* in Tshar chen's catalogue of *Dud sol ma*, when Tshar chen alludes to a similar story in which Mar pa requested *Dud sol ma* from Nāropa:[390]

---

[385] Her name is sometimes spelled Dud gsol ma "Smoke-clad Lady" (skt: Dhūmavas or Dhūmavatī) but I did not find this spelling in the KGND or in rNgog-related texts. The Sanskrit name *Dhūmāṅgārī* corresponds to the Tibetan *dud sol ma*, and is found in several Sanskrit *Catuṣpīṭha* manuscripts, for instance the *Yogāmbarasādhanopāyikā* of Amitavajra (Szántó 2012, 170-172). Her name also appears in several fragments related to the *Catuṣpītha* cult (Szántó 2012, p. 180). It is noteworthy that the indic title of the *Dud sol ma'i sgrub thabs* (Tōhoku 1769) composed by Vanaratna (1384-1468) is given as *Dhūmāṅgārīsādhana*. The translator was Lo chen bSod nams rgya mtsho, an important disciple of rNgog Byang chub dpal. Because the Sanskrit name is not well attested and because the cult of Dud sol ma is much more present in Tibet than in India, I chose to use the Tibetan name rather than the Indian one in order to refer to her throughout the present study.

[386] KGND, 6: 53-67. See below Chapter II.5.

[387] *Ḍākinyagnijihvajvalātantra* (*Mkha' 'gro ma me lce 'bar ba'i rgyud*), Tōhoku 842. Dergé Kanjur, vol. 99, 466-505 (rNying rgyud section); KGND, vol. 6, 283-351.

[388] KGND, 6: 253-281: *dPal lha mo nag mo'i dngos grub thams cad 'byung ba'i rgyud.*

[389] The text is said to have been translated by Nāropa and Lokaśrī. There are two texts in the *bsTan 'gyur* that were also translated by that team, both called the *dPal lha mo chen mo'i sgrub thabs*, Tōhoku 1766 and 1781. They are identical and said in the sNar thang and sDe dge editions to be authored by Nāropa, translated by Lokaśrī and to come from Mar pa's textbook. They are identified in the colophon as Dud sol ma *sādhana*s and do not correspond to the text included in the KGND. I wonder whether one of the two should not have been that *dPal lha mo nag mo'i dngos grub thams cad 'byung ba'i rgyud*.

[390] See above and ST1, 9 for the rNgog version and KGND, 6: 55-56 for Tshar chen's: *nga'i bla ma 'di la bstan srung brgya rtsa brgyad yod pa'i nang nas/ gtor ma dngos su len pa'i chos kyong 'dod khams dbang phyug dud sol lha mo/ gnod sbyin tsa muntri/ ḍā ki ma seng ge'i gdong pa can dang gsum gdung pas/ 'di gsum po zhu dgos snyam nas/ de ltar zhus pas/ nā ro pa chen po'i gsung nas/ gsum ka mi 'ong gang rung zhig 'dom gsung pas/ rje mar pa'i thugs dgongs la/ dud sol lha mo 'di kyai rdo rje'i rgyud dang/ rdo rje gdan bzhi'i bka' srung du 'dug*

> "Among the 108 protectors of my guru, there are three that actually come to retrieve the *balin*: the Dharma protector Powerful of the World Goddess Dud sol ma, the *yakṣa* Camuṇḍi and the Lion-faced Ḍākima – I should request all three!' He did thus, but the great Nāropa replied: "It won't be all three – chose any one!' Lord Mar pa thought that the goddess Dud sol ma was the protective deity of *Hevajra* and *Catuṣpīṭha*, and that she assumed the main protection of the guru's teaching, so he requested her.

Following this account, one finds an explanation of Mar pa's three main protectors, called Ka ka rtsal,[391] Thod 'phreng can[392] and Dud sol ma. According to Nāropa, they are three protective deities of the *Catuṣpīṭhatantra*.[393] rNgog Chos rdor faced the same dilemma as his master when he wanted to request a protector's practice. He also solved it in the same way, by requesting his master's main protective deity and the one who was the most present in his life. It is said in some of Mar pa's biographies that he received this transmission not only from Nāropa, but also from sPyi ther pa, when he first requested *Catuṣpīṭha* from him during his first journey to Nepal.

Tshar chen concludes his short history by stating that Mar pa gave *Dud sol ma* simultaneously to Chos rdor and his son mDo sde. This is not specified in the *Rosaries*, but it might mean that the transmission took place after the second donation, when mDo sde was in his fourth or fifth year. At that time, Chos rdor went to lHo brag with him and his wife, accompanied by Mi la ras pa, and they received *Catuṣpīṭha*.[394]

A specificity of the *Dud sol ma* transmission, as explained by Tshar chen in his catalogue, is that one first receives an outer initiation in the form of an authorization (*rjes gnang*). The secret initiation is only given to select students at a later point, in a one-to-one transmission called "knowledge entrustment' (*rig gtad*), whereby the student is made the next lineage-holder. The fantastic way Tshar chen was passed on that responsibility by the last of the rNgog is expounded in detail below (Chapter II.5).

Dud sol ma became an important protective deity in the lineages that inherited the Mar rNgog transmission and it is considered necessary to invoke her when practicing the tantras of Mar pa's tradition such as *Hevajra*, *Guhyasamāja*, etc.[395] Her praise and mantra are part of the daily protector rituals of the Kaṁ tshang bka' brgyud order and her representation is quite common: she's alone, black and emaciated, with four arms holding a sword and skull-cup in

---

pa dang/ khyad par bla ma'i chos skyong gi gtso bo mdzad kyin 'dug pas/ 'di zhu zhus pas/. The similar story with Chos rdor is on p. 57.

[391] Called Kaṃ ka rtsal in ST2, 34 and ST3, 72. The identity of this protective deity is not clear, as is the possible identity with Camuṇḍi mentioned in Tshar chen's account. Camuṇḍi is an Hindu goddess.

[392] Called Thod 'phreng rtsal in ST2, 34 and ST3, 73. Tshar chen talks of the Lion-faced Ḍākima, maybe Siṃhamukhā.

[393] See *dPal ldan dud sol ma'i rjes gnang*, KGND, 6: 113. This is an empowerment of Dud sol ma composed by Ngor mkhan chen 08 Sangs rgyas rin chen (1450-1524) of the Gle slung chos sde Monastery.

[394] See ST1, 11 and section II.3.1.

[395] The text that is generally included in the daily practices is the *bsTan srung gtso mo dud sol ma'i gtor chog dbyar rnga'i sgra dbyangs*, KGND, 6: 245-251, composed by Kong sprul.

the right, and a lance and trident in the left, riding a donkey.[396] Alain Bordier owns a painting explicitly associated with the rNgog tradition, with representations of Chos rdor and mDo sde at the top of the painting. That painting was realized in the sMar pa bka' brgyud order founded by sMar pa Shes rab ye shes (1135-1203).[397]

2.3. A Transmission not from Mar pa: *Mañjuśrīnāmasaṃgīti*

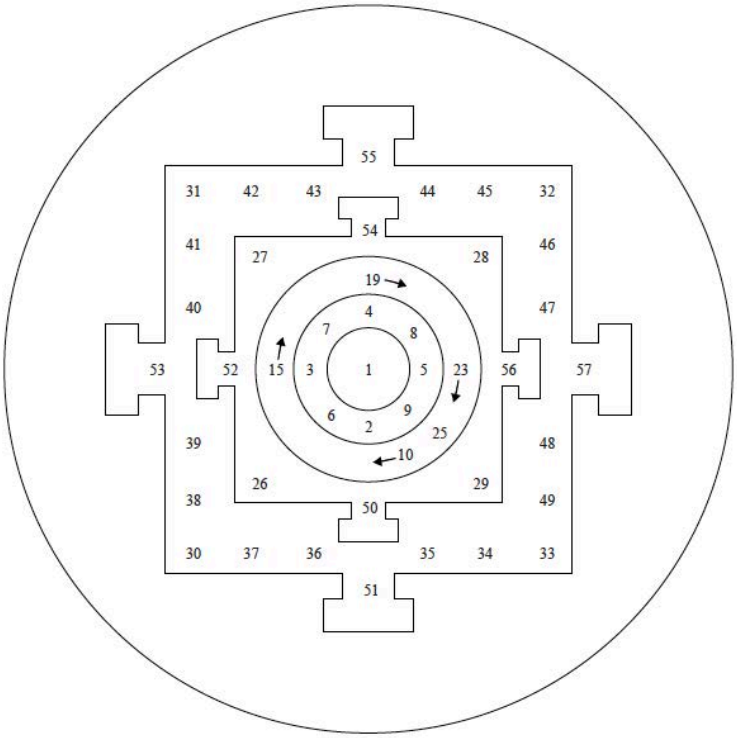

Plate 9: 53-deity maṇḍala of *Nāmasaṃgīti* (*'jam dpal gsang ldan lha nga gsum*): Mañjuśrī with buddhas and bodhisattvas of the Vajra, Ratna, Padma and Karma families and offering deities. Tachikawa 1991, 82-93 (maṇḍala 41B)

The rNgog tradition of *Nāmasaṃgīti*

> From Bye ma lung pa (Chos kyi seng ge), he received *Mañjuśrīnāmasaṃgīti*, the *Explanation of the Meaning of the [Name-]mantras*, the *gSang ldan* fire oblation in two phases, the reading practice, [the *Mañjuśrīsādhana* composed by] Yaśokalyāṇī; [the *Mañjuśrīratnavidhi* composed by] Yaśodā, the *A sho ka ri* as well as commentaries on the mantras.

---

[396] KGND, 6: 247.

[397] See Béguin 2013, 91-93, for a reproduction of the painting (also reproduced on the last page of the present dissertation) and section II.3.2.6.8 for more detail.

> Later, he requested [this transmission] from Khams pa Shes rab rdo rje (after having offered to him a 20.000-stanza *Prajñāpāramitā*). The two are thus called the earlier and later lords.[398]

The next transmission received by rNgog Chos rdor is *Nāmasaṃgīti*, the "Chanting of Names," a tantra whose central figure is Mañjuśrī Jñānasattva.[399] This tantra, the first of the tantra section of the *bKa' 'gyur*, is quite important in Tibet, where it is recited daily to promote intelligence and memory. There are numerous commentaries on the tantra, composed in India and later in Tibet, which offer a variety of approaches. According to Anthony Tribe, who wrote his doctoral thesis on the subject, one reason for the enduring influence of this short tantra (162 verses followed by a prose section) "may lie in the fact that the *Nāmasaṃgīti* does not explicitly promote any one philosophical position, […] [t]hus the series of descriptions of the qualities, attributes and embodiments of the enlightened state of which the verses are composed are amenable to a wide range of interpretation, as well as being eminently suitable for liturgical and devotional use."[400] As a consequence, and although the *Nāmasaṃgīti* is classified as a mahāyoga tantra in its colophon, it opens the Kālacakra section of the *bKa' 'gyur*, and the 129 works related to it in the *bsTan 'gyur* are classified within the various classes of tantras, from yoga to mahāyoga, yoginī and "non-dual' (Kālacakra) tantras.[401] Among the most famous are the commentaries by Mañjuśrīmitra (Tōhoku 2532)[402] and Vilāsavajra (Tōhoku 2533)[403] for the yoga level, Vimalamitra (Tōhoku 2092)[404] for the *mahāyoga* ("father") division, and Advayavajra (a.k.a. Maitripa, Mar pa's master) for the *yoginī* ("mother") division.[405]

---

[398] ST1, 9: 7-8.

[399] *Mañjuśrījñānasattvasyaparamārthanāmasaṃgīti* (*'Jam dpal ye shes sems dpa'i don dam pa'i mtshan yang dag par brjod pa*). Tōhoku 360. Dergé Kanjur, vol. 1, folios 1v.1-13v.7. Tr. by Kamalagupta and Rin chen bzang po. Revised by Shong Blo gros brtan pa. As noted in Davidson 1981, 11; Tribe 1994, 190-191 & 193-196; and Tribe 1994, 114, it is likely that there was a translation made during the earlier spread of the Dharma in Tibet. It was later replaced by Rin chen bzang po's.

[400] Tribe 1994, 113. A revised version of Antony Tribe's dissertation is now available (Tribe 2016) but I could not consult it for the present research.

[401] See Tribe 1994, 128-129, n. 21: "In the Derge edition six are assigned to the Kālacakra division (Tōhoku 1395-1400), thirty-two to that of the anuttaratantras (Tōhoku 2090-2121), and ninety-one to the yogatantra section (Tōhoku 2532-2622). As Davidson [1981, 15] notes some of these placings are somewhat arbitrary and do not accurately reflect the text's actual perspective." Harrington 2002, 342, n. 777, lists some of the main commentaries with their dates and line of interpretation. On pp. 405-408, she translates the second Dalai-Lama dGe 'dun rgya mtsho's presentation of the various commentaries on *Nāmasaṃgīti*.

[402] *Nāmasaṃgītivṛtti* (*Mtshan yang dag par brjod pa'i 'grel pa*). Tōhoku 2532. Dergé Tanjur, 62: 2-54, tr. by Śraddhākaravarman and Rin chen bzang po.

[403] *Nāmasaṃgītiṭīkā-nāmamantrārthāvalokinī (mTshan yang dag par brjod pa'i rgya cher 'grel pa mtshan gsang sngags kyi don du rnam par lta ba*. Tōhoku 2533. Dergé Tanjur, 62: 54-230, tr. by Smṛtiśrījñāna, revised by Phyag na rdo rje (Vajrapāṇi) and Klog skya Shes rab brtsegs.

[404] *Nāmasaṃgītivṛttināmārthaprakāśakaraṇadīpa* (*mTshan yang dag par brjod pa'i 'grel pa mtshan don gsal bar byed pa'i sgron ma*). Tōhoku 2092. Dergé Tanjur, vol. 48: 1-76. Tr. by Gnyags Dznyā na (Jñānakumāra).

[405] Tōhoku 2094-2105.

The tradition rNgog Chos rdor specialized in was the yoga tantra tradition descending from Vilāsavajra, which came to be known as *gSang ldan*.[406] Vilāsavajra's commentary on the *Nāmasaṃgīti*, the *Explanation of the Meaning of the Name-mantra*, is the only yoga tantra commentary known to survive in the original Sanskrit.[407] Chos rdor is also said to have received Mar pa's transmission coming from Maitripa, hence his tradition of the *Nāmasaṃgīti* is considered by Kong sprul externally yoga but actually highest yoga tantra.[408] It is for this reason that Kong sprul includes the 53-deity *Nāmasaṃgīti* maṇḍala within the thirteen highest yoga tantras that make up the heart of the *bKa' brgyud sngags mdzod*, in particular within the "ignorance father tantra" category.[409]

In Tibet, Vilāsavajra (*sgeg pa'i rdo rje*)[410] is considered the author of five treatises,[411] among which four were composed under the name Agrabodhi (*byang chub mchog*). One of them, the *Nāmasaṃgītisādhana*, has the words *gsang ba dang ldan pa* in the colophon, leading to the tradition being named gSang ldan, "Endowed with Secret."[412] Bu ston, Tāranātha and others unanimously consider that Vilāsavajra was the secret name of Agrabodhi.[413] Ron Davidson, in an article published in 1981, argues that this identification is questionable,[414] and Anthony

---

[406] The Sanskrit version of *gSang ldan*, if one is to believe the Sanskrit title (in Tibetan letters) provided in Agrabodhi's commentary (Tōhoku 2584, vol. 63: 214), translated by Smṛtiśrījñāna, may be **Guhyāpanna*: *Āryamañjuśrīnāmasaṃgītiguhyāpannopāyikāvṛtti-jñānadīpa-nāma* (*'Phags pa 'jam dpal gyi mtshan yang dag par brjod pa'i gsang ba dang ldan pa'i sgrub pa'i thabs kyi 'grel pa ye shes gsal ba*). This is the name given in Davidson 1981, 8 and Tribe 1994, 22, n. 20. The Sanskrit version is not attested, however. According to Matthew Kapstein (oral communication, 11.12.2017), it may be better rendered as *Guhyatā*, "one who has obtained the secret," "who has been initiated to the secret," a term used in Shiva tantras.

[407] This was edited and studied by Anthony Tribe in his 1994 Oxford thesis (Tribe 1994, revised Tribe 2016). Anthony Tribe also wrote an article on the *Nāmasaṃgīti* (Tribe 1997). There exist two articles in Japanese by Munenobu Sakurai on the *gSang ldan* tradition (Sakurai 1987a, 1987b).

[408] KGNDdkar chag, 36-37. rNgog Chos rdor is generally said in the biographies to receive the yoga tantra tradition descending from Vilāsavajra from Bye ma lung pa and Khams pa Shes rab rdo rje (see section II.3.1). Kong sprul (KGNDdkar chag, 37), quoting his master 'Jam dbyang mkhyen brtse dbang po, argues that Chos rdor did receive the *Nāmasaṃgīti* at the highest yoga level from Mar pa. As a consequence, although masters in the lineage did as if they were transmitting it at the yoga tantra level only, the base of the practice was the highest yoga empowerment received from Mar pa.

[409] KGNDdkar chag, 36: *bla med pa rgyud gti mug rigs*.

[410] As pointed out in Davidson 1981, 18-19, n. 18, the name sGeg pa'i rdo rje was often wrongly back-translated as Līlāvajra in the West (e.g. in Roerich's BA) as well as Lalitavajra (for the Tibetan Rol pa'i rdo rje). For more details, see Tribe 1994, 9-11. This mistranslation led to the erroneous attributions of several of Lalitavajra's texts to Vilāsavajra (see e.g. the entry "Lalitavajra (*Sgeg pa rdo rje*)' in Dan Martin's *Tibskrit*).

[411] Tōhoku 2533, 2579, 2580, 2581, 2582.

[412] *Mañjuśrīnāmasaṅgītisādhana* (*'Phags pa 'jam dpal gyi mtshan yang dag par brjod pa'i sgrub pa'i thabs*), Tōhoku 2579, vol. *ngu*, folios 59r.4-70v.2. Although the title is different, the following words are found in the colophon: *'phags pa mtshan yang dag par brjod pa'i* ***gsang ba dang ldan pa****'i sgrub thabs/ /slob dpon chen po dpal ldan byang chub mchog gis mdzad pa rdzogs so*. It must be noted that Agrabodhi's name (Byang chub mchog) was also erroneously back-translated as *Varabodhi or *Bodhivara (e.g. in the AIBS database, http://www.aibs.columbia.edu/, or in Dan Martin's *Tibskrit*).

[413] See Tāranātha 1970, 271-272, or Bu ston's *Yogatantra* 134: 4-5 & 178: 3-4, where Bu ston mentions Vilāsavajra's five teachings translated by Smṛti[jñānakīrti]: *jo bo smritis rang 'gyur du mdzad nas/ […] sgeg pa'i rdo rje chos lnar grags pa rnams* […], or 133: 6-7, where he lists Vilāsavajra's five names.

[414] Davidson 1981, 8, n. 22.

Tribe, in 1994, proved that the name is derived from a Tibetan mistranslation of the Sanskrit colophon of Vilāsavajra's commentary.[415] This colophon is not present in all manuscripts edited by Tribe, but it appears in the one conserved in Cambridge.[416] This manuscript is in poor condition and must be emended in places on the basis of the enlarged Tibetan colophon. It nonetheless provides the following information:[417]

> [Here ends] the work of Ācārya Vilāsavajra, inhabitant of Ratnadvīpa, son of the sister of Śrī Agrabodhi [and] whose name is [also] known as Śrī Viśvarūpa.

The Tibetan colophon offers a mistranslation of the section regarding Agrabodhi's name, mistaking it for another of Vilāsavajra's names:

> [The work] called an *Explanation of the Meaning of the Name-Mantras*, a commentary on the *Āryanāmasaṃgīti* – composed by the Indian *paṇḍita* Vilāsavajra, dweller on the jewel island, "Endowed with sun', *Śrīmadagrabodhibhāgin, whose name is [also] celebrated as Śrī Viśvarūpa – is complete.

From this, we can conclude that Vilāsavajra was the nephew of Agrabodhi, i.e. the son of Agrabodhi's sister. He followed broadly the same perspective as his uncle in his exegesis of the *Nāmasaṃgīti*, and their five treatises were translated by Smṛtijñānakīrti in Eastern Tibet at the turn of the 11th century. This proximity, combined with the presence of the name Agrabodhi in Vilāsavajra's colophon, led to a conflation of the two in Tibet.[418]

This tradition was received twice by rNgog Chos rdor, from Bye ma lung pa Chos kyi seng ge and from Khams pa Shes rab rdo rje. In the *Rosaries*, the transmission is said to be made up of the root tantra, the *Nāmasaṃgīti* itself (refered to as "*Mañjuśrī*" or "*Nāmasaṃgīti*"), and its commentary by Vilāsavajra, called the *Explanation of the Meaning of the Mantras*.[419] This is the short and honorific form for the longer *bsTan 'gyur* title, *Large Commentary on the Noble Chanting of Names, Explanation of the Meaning of the Name-Mantras*.[420] This commentary, together with the associated rituals by Agrabodhi, is refered to as the gSang ldan tradition. In the religious lineages of the *Rosaries*, the two are distinguished. Although both lineages are identical until rNgog mDo sde, the "*Mañjuśrī* lineage" (the *Nāmasaṃgīti* empowerment) on the one hand is identical to the main Dharma lineage, that is to say that it passes through each of the rNgog lineage-holders. The gSang ldan lineage on the other hand passes to rTsags

---

[415] Tribe 1994, 18-23.

[416] Manuscript belonging to the University of Cambridge (Bendall Add. 1708). Palm-leaf, Newarī script, 115 folios (26 missing), dated Samvat 57? (= c. 1450 CE).

[417] As translated in Tribe 1994, 19, and 410-411 for the Sanskrit, the Tibetan and the justification of the emendations.

[418] Tribe 1994, 20, n. 62.

[419] ST1, 9; ST2, 34; Bu ston's *Yogatantra* 178: 3: *sNgags don rnam gzigs.*

[420] *'Phags pa mtshan yang dag par brjod pa'i rgya cher 'grel pa mtshan gsang* ***sngags*** *kyi* ***don*** *du* ***rnam*** *par* ***lta*** *ba* Tōhoku 2533. Edited and partially translated in Tribe 1994 (revised Tribe 2016).

Darma rgyal po after mDo sde and re-enters the hereditary lineage with rNgog Rin chen bzang po.[421]

The next treatise mentioned in the *Rosaries* as being part of the gSang ldan tradition is the gSang ldan fire oblation in two phases. This refers to the *homa* composed by Agrabodhi.[422] Although the two phases are not specified in the title, the colophon indicates that this fire oblation should be explained in two steps.[423] These two are clarified in rTsags Darma rgyal po's commentary in the rNgog tradition:[424] they are the fire oblation for one's benefit (pacification of bad dreams and negativities) and the fire oblation for other's benefit (cremation of the dead and healing of the sick).

The third text is the so-called "reading practice" (*glags sgrub*). This may refer to another of Agrabodhi's treatises, the *Meditational instructions [Arranged for] Reading of the Nāmasaṃgīti*.[425]

Agrabodhi's other two treatises are not mentioned in the *Rosaries* but must have been part of the transmission received by Chos rdor. They are the *Nāmasaṃgītisādhana* mentioned above,[426] which started the gSang ldan line of exegesis, and the initiation ritual of Mañjuśrī.[427] Tāranātha states that these two are his main sources for his own practice and initiation rituals of the gSang ldan tradition,[428] and they are Kong sprul's sources as well.[429]

---

[421] ST1, 8.3 and 8.5; ST2, 33.1 and 33.2.

[422] *Mañjuśrīnāmasaṅgīti-nāma-homakrama* (*'Phags pa 'jam dpal gyi mtshan yang dag par brjod pa zhes bya ba'i sbyin sreg gi rim pa*). Tōhoku 2581. Dergé Tanjur, vol. *ngu*, folios 76v.4-83r.1.

[423] Dergé Tanjur, vol. *ngu*, f. 82b: *'phags pa 'jam dpal gyi mtshan yang dag par brjod pa zhes bya ba'i sbyin sreg gi rim pa/ 'jam dpal ye shes sems dpa' la phyag 'tshal lo/ /bden pa gnyis la gnas shing dri med gzi brjid ldan pa yi/ /tshul mchog dam pa rim pa bzhir ldan rnal 'byor pa/* ***rim gnyis*** *tshul gyis sbyin sreg cho ga bshad par bya*.

[424] NKSB, vol. 16 (237), 243.

[425] **Nāmasaṅgītyadhyayanāntarbhāvanā* (*mTshan yang dag par brjod pa'i bklag pa'i sgom khog*). Tōhoku 2580.

[426] *Āryamañjuśrīnāmasaṃgītisādhanopāyikā* (*'Phags pa 'jam dpal gyi mtshan yang dag par brjod pa'i sgrub pa'i thabs)*. Tōhoku 2579.

[427] *Mañjuśrīmaṇḍalavidhiguṇasambhava* (*'Phags pa 'jam dpal gyi dkyil 'khor gyi cho ga yon tan 'byung gnas)*. Tōhoku 2582.

[428] Tāranātha: "'Jam dpal gsang ldan gyi dkyil chog." In *gSung 'bum dpe sdur ma*, 12: 181-239. See introduction 181: "I will expound in short the *sādhana* and *maṇḍalapuja* as they appear in the *Sādhana Endowed with Secret* and in the *Maṇḍalapuja Source of Qualities*, which are texts composed by Acarya Vilāsavajra." (*slob dpon sgeg pa'i rdo rjes mdzad pa'i gzhung sgrub thabs gsang ldan dang dkyil chog yon tan 'byung gnas las 'byung ba ltar sgrub thabs dang dkyil 'khor gyi cho ga mdo tsam brjod par bya'o*.)

[429] Kong sprul, who draws heavily on Tāranātha's *sādhana* and *maṇḍalapuja* for his own compilation, splits it in two on the basis of Agrabodhi's two treatises (*rGyud thams cad kyi bdag po 'jam dpal mtshan brjod rigs bsdus pa'i sgrub thabs ye shes 'bar ba'i ral gri*, In KGND, 4: 375-409 and *'Jam dpal rigs bsdus kyi dkyil 'khor gyi cho ga gsang ba kun 'byung gi glegs bam*, In KGND, 4: 411-463)

The transmission is also made up of two *sādhana*s composed by lay-women, Yaśokalyāṇī (*sNyan grags dge ma*)[430] and Yaśodā (*Grags sbyin ma*).[431] These are the only two texts on Mañjuśrī composed by female authors, but nothing is known about these two *upāsikā* practitioners. The two texts were translated by Smṛtijñānakīrti.

It is difficult to pinpoint the last two items in Chos rdor's transmission of the *Nāmasaṃgīti*. The first, "A sho ka ri" may be one or several of the works on Mañjuśrī composed by Aśokaśrī (*Mya ngan med pa'i dpal*), a paṇḍita who lived during the time Atiśa was in Tibet.[432] There does not seem to be any link between these and Vilāsavajra's transmission and they are not mentioned by Bu ston, but they are also conserved in the yoga tantra section of the *bsTan 'gyur*.

The last term in the list, "commentaries on mantras" (*sngags 'grel rnams*), is even more unclear. It may refer to other treatises related to Vilāsavajra's tradition of the *Nāmasaṃgīti* composed by Smṛtijñānakīrti and which were received by Chos rdor. These are mentioned by Bu ston in a twelve-item list of Smṛtijñānakīrti's yoga tantra tradition of *Nāmasaṃgīti*.[433] In this list one finds a consecration ritual by Śāntigarbha[434] and four texts by Smṛtijñānakīrti–a commentary on Agrabodhi's **Guhyāpannasādhana*,[435] a consecration ritual,[436] a "puja of lines,"[437] and a *gSang ldan* manual.[438] They are not mentioned in the *Rosaries* but figure in some of the rNgog tradition commentaries on *Nāmasaṃgīti*.[439]

The rNgog lineage of *Nāmasaṃgīti*

In the *Rosaries*, the lineage leading up to rNgog Chos rdor is described as follows:[440]

---

[430] *Mañjuśrīsādhana* (*'Phags pa 'jam dpal gyi sgrub thabs*). Tōhoku 2587.

[431] *Mañjuśrīratnavidhi* (*'Phags pa 'jam dpal rin po che'i cho ga*). Tōhoku 2588.

[432] *mKhas pa'i dga' ston*, 1501. He is the author of Tōhoku 2603, 2606, 2607, 2608, 2609, probably 2610, 2611 and 2612. 2606, 2611 and 2612 are pujas related to Mañjuśrī.

[433] Bu ston's *Yogatantra*, 178: 3-6. The twelve are the five dharmas of Vilāsavajra/Agrabodhi, Śāntigarbha's consecration ritual, the two *sādhana*s by sNyan grags dge ma and Grags sbyin ma and the four treatises by Smṛtijñānakīrti (one lacking in the list).

[434] *Mañjuśrīnāmasaṅgītimaṇḍalavidhi* (*'Phags pa 'jam dpal gyi mtshan yang dag par brjod pa'i dkyil 'khor gyi cho ga*). Tōhoku 2595.

[435] *Āryamañjuśrīnāmasaṃgītiguhyāpannopāyikāvṛtti-jñānadīpa-nāma* (*'Phags pa 'jam dpal gyi mtshan yang dag par brjod pa'i gsang ba dang ldan pa'i sgrub pa'i thabs kyi 'grel pa ye shes gsal ba*). Tōhoku 2584.

[436] Called *rab gnas gyi cho ga* in Bu ston's *Yogatantra* 178: 5. This refers to the *Pratiṣṭhāvidhi* (*Spyan dbye ba'i cho ga*), Tōhoku 2586, called *Rab tu gnas pa'i cho ga* in the colophon (vol. *ngu*, 151b).

[437] Bu ston says *thig rtsa*. This may refer to the *Sgrub thabs gsang ba dang ldan pa'i thig gi cho ga*. Tōhoku 2585.

[438] *Gsang ldan gyi tho yig*, Tōhoku 2594. This is not listed among Bu ston's list of so-called "twelve" Indian texts translated and/or composed by Smṛtijñānakīrti, which are only eleven. This may be the 12th and last, omitted, one.

[439] The *Thig rtsa* for instance is mentioned in a text composed by rNgog mDo sde (NKSB, vol. 8, 188).

[440] The names are given in tibetanized Sanskrit in ST1; I provide between brackets the Tibetan equivalent, mentioned for example in rTsags Darma rgyal po's commentaries

> Lineage of Mañjuśrī:[441] Mañjuśrī, Vilāsavajra, Sūryasiṃha (*Nyi ma sengge*), Dharmavajra (*Chos kyi rdo rje*), Mudrāsiddhi (*Phyag rgya'i dngos grub*), Deveśvara (*lHa'i dbang phyug*), to both Śāntigarbha and Smṛtijñāna, him to Tshong sde Ngag gi dbang phyug, [then] Khams pa Shes rab rdo rje, Dharmavajra ([rNgog] Chos rdor) […]
> Also, it was [received] from the disciple of Śāntigarbha, Sūryasiddhi, by Bye ma lung pa, and from him by Chos rdor.[442]

No further details are provided in the *Rosaries*, but one finds in both rNgog mDo sde's disciple rTsags Dar ma rgyal po's commentary on the *gSang ldan* tradition[443] and in Bu ston's *yogatantra* history[444] an account of the *Nāmasaṃgīti* lineage and of the way rNgog Chos rdor received it from Bye ma lung pa Chos kyi seng ge and Khams pa Shes rab rdo rje. I rely mainly on these two texts for the explanation that follows, except when I add further details found elsewhere, in which case it is indicated.

Not much is said about the masters intervening between Vilāsavajra and Deveśvara, except their place of origin and the fact that they gained their accomplishment on the basis of their practice of Mañjuśrī. Deveśvara is considered to have had two disciples, Śāntigarbha and Smṛtijñānakīrti.

Smṛtijñānakīrti was an Indian paṇḍita who lived from the mid-10th through the beginning of the 11th century.[445] Local chiefs invited him to sPu rangs, near the Kailash mountain and the Gu ge region, where Buddhism was about to be rekindled. His translator died on the way and he was stranded in Tibet, unable to make himself understood. He was seized by three men, who sold him as a goat-herd in Shangs rTa nag, in gTsang. After some time, people remarked he was learned, and he was released.[446] He accompanied some merchants to Khams via 'Phan yul, and eventually settled in Khams, in a place called Po ma ri, where at last he learned Tibetan together with his disciple, the merchant (*tshong sde*) Ngag gi dbang phyug, to whom he transmitted a great deal of teachings. Smṛtijñānakīrti translated the Indian manuscripts of his late translator, among others the twelve above-mentioned texts related to Mañjuśrī. Ngag gi dbang phyug's student was called Shes rab rdo rje, sometimes said to be from sPu rangs, and sometimes from Khams. According to Bu ston, he was born in sPu rangs but moved early to Khams where he spent a long time, hence was called Khams pa Shes rab rdo rje.

---

[441] ST2, 33, specifies this is the lineage of *Nāmasaṃgīti*.

[442] ST1, 4 & ST2, 33.

[443] "'Jam dpal gsang ldan gyi rgya cher bshad pa." In NKSB, 16: 68-72.

[444] Bu ston's *Yogatantra*, 134-135 & 176-180.

[445] He is generally considered the last of the translator of the early spread of Dharma in Tibet, and was active before Rin chen bzang po (958-1055)(see e.g. Dudjom 1991, 11; Raudsepp 2011, 35-36). His biography is given here according to the two texts mentioned earlier.

[446] BA, 395, states that Smṛtijñānakīrti was freed by dPyal 'Byung gnas rgyal mtshan, who gave a large amount of gold to his owner who employed him as a shepherd.

Smṛtijñānakīrti's translations spread in Tibet and the Central Tibetan Bye ma lung pa Chos kyi seng ge came to know about them.[447] He felt great devotion for the *Nāmasaṃgīti* tradition and searched for someone who could give it to him. In sPu rangs, he met Sūryasiddhi, a disciple of Śāntigarbha, who had been invited to Tibet by a translator called Zhang cog gru mchog.[448] Bye ma lung pa showed Smṛtijñānakīrti's translations to Sūryasiddhi, who regarded them highly and did not deem it necessary to make any corrections. His master, Śāntigarbha, had received *Nāmasaṃgīti* from Deveśvara together with Smṛtijñānakīrti, so Bye ma lung pa studied this transmission with Sūryasiddhi and returned home, to Bye ma lung, in sTod lung. This is where rNgog Chos rdor met him and received perfectly the transmission from him.

At that time, Khams pa Shes rab rdo rje returned to Central Tibet and studied the *Nāmasaṃgīti* cycle again with Bye ma lung pa. He continued on to his birthplace, sPu rangs, and received the transmission once more from Sūryasiddhi, with the assistance of Zhang cog gru mchog.

What happened next is a bit unclear in the *Rosaries*, which state:

> [rNgog Chos rdor] travelled to Shangs to listen to the yoga tantras from Sum pa Ye shes 'bar, but as he was busy building a temple and other things, [rNgog] went to 'O yug to listen to the yoga tantras from an uncle of Ram klu gong pa.[449]

The version of events provided by rTsags Dar ma rgyal po and Bu ston is slightly different.[450] According to them, in Shangs (to the north of gZhis ka rtse) there was a master famous for his knowledge of the yoga tantras, known as Sum ston Ye shes 'bar. In the *Deb ther sngon po*, he is described as a disciple of Rin chen bzang po and Lo chung rNgog Legs pa'i shes rab.[451] Chos rdor went to study with him, but when he reached Shangs, he saw in the courtyard a monk with tattered robes, and the master arrived with his servant carrying their texts unsteadily on a wild horse. Chos rdor had a discussion with Ye shes 'bar about the *Nāmasaṃgīti* and the yoga tantras, and Ye shes 'bar proved superior, also with regards to key-instructions,[452] but more than anything else rNgog was impressed by Smṛtijñānakīrti's lineage. When he learned from Ye shes 'bar that it was Khams pa Shes rab rdo rje who was acclaimed for it, he decided to abort his stay in Shangs, and to return home in order to invite Khams pa Shes rab rdo rje.[453] Shes rab rdo rje stayed in gZhung for a year, transmitting again

---

[447] Bye ma lung is located in sTod lung, near Yangs pa can, to the north of lHa sa.

[448] Called Zhang cog gru mchog in Bu ston's *Yogatantra*, 179: 1 but Zhang cog ro mchog in NKSB, 16: 71.

[449] ST1, 10.1; ST2, 34.7.

[450] The two do not mention 'O yug, Ram from Klu gong or his uncle. See section II.3.1. for details on their identity.

[451] BA 353.

[452] I am not sure who won the debate. Despite my translation, it might as well be rNgog. (Bu ston's *Yogatantra*, 179: 7, NKSB, 16: 72).

[453] In the BA, 355, it is stated that Khams pa Shes rab rdo rje was Ye shes 'bar's disciple. In the Tibetan (*Deb sngon*, 1: 433), the sentence is not that clear; it is only said that Shes rab rdo rje "came" (*byung*) to Ye shes 'bar. According to our version of events, I would rather believe that Ye shes 'bar was a co-student of Shes rab rdo rje

to Chos rdor *Nāmasaṃgīti*, the *kriya* tantras and other teachings, in return for scriptures like the *Ratnakūṭasūtra*, the *Prajñāpāramitā in 20.000 Verses*, clothes, gold, etc.

Thus, Chos rdor held two lineages of Vilāsavajra's tradition of *Nāmasaṃgīti*: one from Smṛtijñānakīrti, known as the "Eastern Tradition" (*smad lugs*) and another from Sūryasiddhi, known as the "Western Tradition" (*stod lugs*). He received them from two masters, called the "earlier and later lords' (*jo bo snga phyi gnyis*). Although it is not stated in the *Rosaries*, it is also generally believed that he received Mar pa's lineage of *Nāmasaṃgīti* from Maitripa, which belongs to the highest yoga class. All of these traditions were given to his son, rNgog mDo sde, and the rNgog pa tradition of *Nāmasaṃgīti* became famous, eventually reaching Bu ston and others. In the *Deb ther sngon po*, 'Gos lo singles out the rNgog tradition of gSang ldan as the main one still extent at his time (in 1476).[454]

---

in sPu rangs, and maybe taught to him, but also recognized him as the expert of the *Nāmasaṃgīti*, as he had studied it in Khams with Ngag gi dbang phyug, Smṛtijñānakīrti's disciple. That would explain why Chos rdor, probably dampened by his experience in Shangs and the inauspicious visions he had, finally decided not to study with Ye shes 'bar despite his fame, and preferred to invite Shes rab rdo rje to gZhung. As the latter was on the move, unlike Ye shes 'bar who had his own place to run, it was probably more convenient to invite him.

[454] BA, 428; *Deb sngon*, 434.

CHAPTER THREE: Lineages

This dissertation has a double focus: the rNgog hereditary lineage and the Mar rngog bka' brgyud religious lineage. Having examined the sources concerning these lineages and the traditions they convey, we will conclude this orientation by questioning the concept of lineage that constitutes the unifying thread of the present study. The concept of lineage is generally associated with familial descent in the West; in Asian religions, however, it is a widespread model of authority. As such, it is omnipresent in Asian religious studies, especially in relation to the esoteric branches of Hinduism and Buddhism. Understanding the specificities of this model and the type of lineage the rNgog embodied help to situate them in Tibet's religious field, namely as representative of a model, the hereditary lineage, that was common in Central Tibet from the 10th to the 15th century. Although the main rNgog religious lineage was hereditary, an analysis of the *Rosaries* shows that the rNgog did not particularly build on the nobility of their family to establish their legitimacy but rather used their religious relation with Mar pa to that aim, integrating his knowledge, prestige, and body remains in order to appear as his legitimate heir. Finally, I try to answer the fundamental question that led my analysis of the rNgog lineage: why did their lineage continue for several centuries and why, at the same time, did they not meet the success of Mar pa's other heirs, especially Mi la ras pa? My answer proceeds with a social analysis of the *Rosaries* in order to understand what types of capital the rNgog possessed and how this influenced their position in Tibet's religious field.

3.1. What is a lineage?

Definition

Buddhism developed successively in time and space, from the time of the historical Buddha Śākyamūni in India and later in the various countries in which it spread. During this evolution, it conserved some of its previous characteristics while adapting to its environment by incorporating indigenous traditions. When Buddhism reached Tibet, it embodied a long monastic tradition, the "path of hearers" (*śravakayāna*) as well as teachings of the "great vehicle" (*mahāyana*) and a great variety of tantras which make up tantric Buddhism (*vajrayāna*, or "secret *mantrayāna*"). All the transmissions described in Chapter I.2. belong to that third vehicle, and are among the latest cycles of Buddhist tantras developed in India, the highest yoga tantras. It is in the framework of Buddhist tantras, and especially highest yoga tantras, that the relationship between master (the Indian *guru* or the Tibetan *bla ma*) and disciple took a preeminent place, and through it so did the "lineage-model of authority." As argued by David Gray:[455]

> Tantric Buddhism arose within a post-Gupta South Asian political context that was noticeably decentralized. Concomitant with this decentralization was the rise

[455] Gray 2013, 49.

> of lineage as a primary term in both political and religious discourse. During the early medieval period, political authority was articulated through the rhetoric of lineage, and this model emerged most noticeably in the seventh century. This period also saw increased emphasis placed on the concept of lineage in religious discourse and practice. The importance placed on gurus, religious authority figures who embody and are empowered to transmit a spiritual lineage through which the teachings are disseminated, a *paramparā*, appears to have been part of a broad, pan-South Asian cultural trend that developed during the early medieval period. The lineage-model of authority seems to proliferate in decentralized political situations, for lineage by its very nature is a model for the organization of relatively small groups, at the level of the family or clan (*kula*), so its coming to the fore may suggest the breakdown of larger, centralized authority.

The Indian political situation that gave rise to this lineage model has parallels in Tibet. As summarized by Sam van Schaik, there was "a major shift during the century after the fall of the Tibetan Empire from a centralized and state-sponsored Buddhism to a dispersed model in which Buddhist practice and ideology was adopted in various ways by local political leaders."[456] It therefore makes sense, if indeed a decentralized political context promotes the lineage-model of authority, that this model continued vigorously in the 11th-century Tibet, when Mar pa imported one of these "lineages" from India.

The use of the English word "lineage" in this context is one that is widespread in Asian religious studies, but relatively new in reference to Western religions. This word was borrowed from the French *ligne*, which itself derives from the Latin *linea* that means "made of linen" (from *linum*, linen). It refers to a linen thread, by extension any textile thread, and by analogy a drawn or geometrical line. In French, the word *ligne* was used until the 16th century to refer to all the members from a same family, before it was replaced by the words *lignage* and *lignée*, which are more specifically related to genealogy, *lignage* referring to all kin from a common ancestor and *lignée* only to the descent of one person.[457] In anthropology, the word lineage refers to "a line of descent of a group of people who trace descent to a common ancestor through known links."[458]

---

[456] van Schaik 2016, 65.

[457] See the etymoly of the words *ligne*, *lignage* and *lignée* in Alain Rey's *Dictionnaire historique de la langue française* (electronic edition, 2011): "LIGNE n. f. est issu (v. 1080, lign), du latin *linea*, féminin substantivé de l'adjectif *lineus*, *-a*, *-um* « de lin », de *linum* (→ lin), qui désigne proprement un fil de lin, puis toute espèce de fil textile ou de corde et, par analogie, une ligne tracée ou géométrique. À l'époque impériale, le mot se dit aussi de l'hérédité. Ligne a été jusqu'au XVIe s. un nom pour l'ensemble des membres d'une même famille, avant de céder cette signification à ses dérivés lignage et lignée." "Créés au XIe et au XIIe s., deux dérivés prolongent le sens le plus ancien de ligne en généalogie : 1 LIGNAGE n. m., d'abord linage (1050), recouvre, avec une valeur collective, l'ensemble des parents d'une souche commune, concept capital dans la féodalité, mais déjà confiné à des emplois spéciaux au XVIIe s., et aujourd'hui repris par les historiens et les ethnologues, tout comme son dérivé LIGNAGER, ÈRE n. et adj. (1411). LIGNÉE n. f. (v. 1120) s'oppose à lignage en ce qu'il désigne seulement la descendance d'une personne; il demeure vivant avec la valeur figurée de « descendance spirituelle » (en locution dans la lignée de) et dans des spécialisations scientifiques en biologie (1907) et en ethnologie."

[458] Parkin and Stone 2004, 458.

The English word "lineage" and its French equivalents were not traditionally used in Christian traditions to refer to spiritual descent. As argued in the quotation above, however, the notion was widespread in Asian traditions, especially Hinduism and Buddhism. It is through the transfer of these religions in the West (and in the English and French languages) that the word "lineage" was used more largely to refer to religious lineages, although the concept of a religious transmission line of individuals, especially related by heredity, is not unknown.

The Tibetan word translated as "lineage" is *brgyud pa*, which refers to the "uninterrupted connection of one to another."[459] In Tibet, it can be simultaneously a lineage of religious transmission and a kinship lineage; the word *brgyud pa* can be used in both contexts. In the *Rosaries*, two spellings of the word are used. The form *brgyud* is used to refer to the lineage as a whole (*chos kyi brgyud pa*, *gdan bzhi'i brgyud pa*, etc.), and is thus an equivalent to the French *lignage*. The form *rgyud* is used to refer to a segment of lineage, hence a *lignée*.[460] While the use of *rgyud* in ST1 is limited,[461] in ST2, *rgyud* is used to refer to the line of each specific tantra (hence *gdan bzhi'i rgyud pa, ma ya'i rgyud pa*). The form *brgyud* is used to refer the religious lineage as a whole, what is called here the "rNgog lineage." In general, the use of both terms seems to be quite fluid.

As regards types of lineages in Tibet, one can distinguish three main ones:[462]

- A "teaching lineage" (*slob brgyud*) refers to a transmission lineage between master and disciple, with a continuity of realization through specific teachings. It was through these teaching lineages that the various orders developed in Tibet. Successful teaching lineages can give rise to a "lama lineage" (*bla ma brgyud pa*), that is to say a succession of gifted individuals who came to embody the specific teachings of each order. In the *Rosaries*, we can consider that all the rNgog who received the rNgog tradition are part of the "teaching lineage." Those who are represented as the bearers of this tradition (generally the abbots of the main monastery, sPre'u zhing) are part of the "lama lineage," called *chos brgyud*, the "religious lineage."[463]
- A "bone lineage" (*gdung brgyud*), called "human lineage" (*mi brgyud*) in the *Rosaries*, is a patrilineal hereditary lineage.

---

[459] *Tshig mdzod chen mo*, 630: *bar ma chad par gcig nas gcig tu sbrel ba.*

[460] In ST1 the most telling example is on pp. 6-7: the expressions *brgyud pa gong ma gtsang tsha rgyud* and *brgyud pa 'og ma ba rgyal tsha rgyud* refer to the two lines of the kinship lineage.

[461] In ST1, all religious lineages are called *brgyud pa*, the form *rgyud* is used to refer to the "short line" going directly from Vajradhara to Mar pa: ST1, 7.7: *nyer rgyud ni/ rdo rje 'chang/ mkha' 'gro ma chu shing gi rnye ma can/ mar pa la rgyud de gong ltar ro//*

[462] Cantwell 1989, 2: 9-13. See also Sihlé 2013, 146: "Une typologie tibétaine assez répandue distingue trois formes de lignées religieuses : la lignée héréditaire (*dung-gyü*, ou « lignée de l'Os »), la lignée de réincarnation (*ku-gyü*, ou « lignée de Corps ») et la lignée de transmission de maître à disciple (*lop-gyü*, ou « lignée d'enseignement ») S'y ajoute parfois encore la « lignée de maîtres » (*la-gyü*). […] La lignée religieuse de base est celle de la transmission de maître à disciple, appelée aussi simplement « lignée religieuse », *chö-gyü*."

[463] See also the definition in See also Yamamoto 2012, 81: "Religious lineages are modeled after biological lineages—the term *brgyud pa* is the same in both cases—and are held together by direct personal relationships between lamas and their disciples, along with the oral instructions (*gdams ngag*) that are transmitted from generation to generation."

- An "incarnation lineage" (*sku brgyud*) is believed to be the continuity of the realized mind of a great master in successive incarnations.

From personal transmission to lineage

Before going any further, it is important to distinguish the actual transmission from master to disciple and the lineage that eventually results from such a transmission. The kind of teaching that gave rise to lineages in India and Tibet are tantric transmissions.[464] They can be of different kinds, but tantric lineages most importantly refer to the transmission of an empowerment ritual through which the master empowers the disciple to meditate himself as the deity.[465] It is considered that the "life-force" of this transmission are the pledges taken up by the disciple at the issue of the empowerment.[466] Among these pledges, there is a set of fourteen main prohibitions, called the "fourteen downfalls." The first is to disrespect one's vajra master, which has strong implications on the way a religious lineage develops.[467] The working of the empowerment thus conditions the creation of a social group where the master occupies the dominant position. A master generally has several disciples, and this gives rise to the group dynamics described by Sam van Schaik:[468]

> […T]he ideal model for the tantric group is very simple. It is inclusive, without restrictions based on gender or ethnic identities, making it a flexible system for group formation, cutting across boundaries of class, clan and ethnicity. It does not require the establishment of monasteries or other property in order to function. The primary method of sustaining its group identity is the repeated practice of rituals among which the empowerment ceremony is the most important. The latter may be seen to imbue its recipient with the 'emotional energy' that some sociologists see as crucial to sustaining group formations. Nevertheless, Tantric groups can have a strong economic resilience, due to the expectation that the disciples will contribute funds to the master as an offering in

---

[464] As the Vinaya has to be transmitted as an authoritative lineage, there are also Vinaya ordination lineages in all Buddhist countries, but this topic exceeds the ambition of the present analysis. For a general presentation of lineages of ordination in Tibet, see Dreyfus 2005 and Sobisch 2010.

[465] There are in fact three kinds of transmissions that result in the three kinds of lineages generally described in *gsan yig*: empowerment (*dbang*), explanation (*khrid*) and reading (*lung*). See e.g. the records of teachings received by the 4th Zhwa dmar or Kun dga' rnam rgyal, or the KGNDdkar chag. Although all three are necessary to actually practice on a specific deity, the first one is paramount.

[466] See Kongtrül and Guarisco 2005, 236, for a short description: "Once an initiation has been received, one must train in the pledges which are the "life" of the initiation. Pledges belong, according to their essence, to one of two categories: prohibitions and injunctions. Pledges that are prohibitions concern the fourteen root downfalls and eight (or nine) secondary ones. The injunction concern the vows of the five [Buddha] families, the pledges of contemplation, conduct, and sustenance, and the pledges regarding ritual articles not to be apart from." Although this is a late example, the system of the fourteen root downfalls derive from the tantras themselves, and particularly, among highest yoga tantras, the *Pañjara* (NKSB, 18: 279). The rNgog received and transmitted a particular commentary on the fourteen downfalls called the *rTsa ltung rgya che 'grel* (tōhoku 2488) by Mañjuśrīkīrti. An example of an early commentary on that text is that by Tshe'u bande, NKSB, 18: 276-314. There (NKSB, 18: 280), the first root downfall is described as "contempt for the *vajrācārya*" (*rdo rje slob dpon la brnyas pa*).

[467] Kongtrül 1998, 257. See Davidson 2002.

[468] Van Schaik 2016, 69.

> return for the empowerment. Crucially, this group dynamics is also self-replicating, in that disciples may become masters in their own right, creating further, often overlapping, wheel-hub structures.

The creation of this social group through empowerment cannot properly speaking be called a lineage. It is a group, that may or more often may not, stay together. It is comprised of a "vajra master" and his disciples, called "vajra brothers and sisters." The lineage comes from the second phase of the group dynamics, when it self-replicates through a disciple becoming a master and attracting his own disciples. This process continues in time, and results in an uninterrupted line of generally one master after the other.

As the situation suggests, however, the master does not have only one disciple,[469] and the disciple generally does not have only one master either. There are therefore many masters and disciples, who represent multiple segments of lineage. What happens in the course of history is that an *a posteriori* selection takes place depending on the way the lineage continues. If a disciple does not have students, or if the transmission the students received from him is not considered their main one, there is no lineage. There can also be a lineage over several generations that gets lost because of a lack of disciples or because of a fusion with another lineage. Thus, it is when the disciple becomes a master in his own right, and when his own disciples also reach some degree of mastery that a common representation of identity may be created. At that point, the concept of a lineage appears and a lineage chart may be created. As pointed out by this process of selection, "a lineage chart […] is not meant to be an accurate depiction of history. It is a *representation*—a symbolic stand-in expressing, not real relationships, but a *tradition*."[470] This fits with the characterization of "tradition" provided by Raymond Williams:[471]

> Most versions of "tradition" can be quickly shown to be radically selective. From a whole possible area of past and present, in a particular culture, certain meanings and practices are neglected or excluded.

Thus Tibetans, in order to elaborate traditions, constructed representations of lineage by selecting one or two masters and disciples at each generation. This process of selection

---

[469] In teachings meant to be very secret, there exist what is called a *cig brgyud*, that is to say a lineage meant to be transmitted by the master to only one disciple. In records of teachings received, however, one often see that there are often several lineages of transmission of supposedly "single" lineages, or that the single lineage only lasts for a few generations before being transmitted more largely. An example in the framework of Mar pa's teaching is that of the Sras mkhar ma, that Chos dbang claimed to be a single lineage but that he gave to several individuals (Ducher 2016a).

[470] Yamamoto 2012, 93. See his Chapter Two on "Lineage and Style: Placing Lama Zhang in the Tradition," 79-96.

[471] Williams Raymond, 1977. *Marxism and Literature*. Oxford & New York: Oxford University Press, 115, quoted in Yamamoto 2012, 94.

happens in religious lineages as it does in kinship lineages, as phrased by Claude Lévi-Strauss:[472]

> Of course, the biological family is ubiquitous in human society. But what confers upon kinship its socio-cultural character is not what it retains from nature, but, rather, the essential way in which it diverges from nature. A kinship system does not consist in the objective ties of descent or consanguinity between individuals. It exists only in human consciousness; it is an arbitrary system of representation, not the spontaneous development of a real system."

Thus, the rNgog lineage, like any lineage, hereditary or not, is not a natural product, but a representation created over time in order to fix an image that corresponds with the perception of contemporary societies.

In the case of the rNgog lineage, the image we perceive is the one created by the various sources mentioned in Chapter I.1, which, to some extent, are all based on the *Rosaries*. ST1 was authored in 1360, by a close disciple of several rNgog masters, himself not belonging to the family; the manuscript we have was copied during a teaching of rNgog Byang chub dpal, maybe in 1434. ST2 was allegedly authored by rNgog Byang chub dpal in the 1430s, less than a decade before his death in 1446, and ST3 was also written during his life, probably a decade earlier. The other main sources, the *lHo rong chos 'byung* and the *Deb ther sngon po*, were written in the decades following his death. This means that most sources (except ST1) were composed in the end of Byang chub dpal's long life, or shortly after his death. They reflect a period when he was at the height of his career, teaching many of the powerful figures of the early 15th century, with the gZhung valley right in the middle of Tibet's center of influence.[473] In these circumstances, and with Byang chub dpal having to vie with other masters to appear legitimate in his transmission, it makes sense to write a genealogy, and to make one's lineage as undistinguishable as possible from Mar pa's.

ST1 and ST2, in a part that make them resemble a record of teachings received, include the lineages of the transmissions described in chapter I.2 and of some other minor transmissions not passing through Mar pa. A comparison between the lineages contained in ST1 and ST2, written down at some 70 years of interval, reveal lineages that are not as monolithic as the invariant ending with Don grub dpal in ST2 would have us believe. In ST1, two branches of the gTsang tsha rNgog, the one of Rin chen rgyal mtshan and the one of Chos kyi rgyal mtshan, seem equally important, and Rin chen rgyal mtshan's father, Seng ge sgra, is on equal footing with Rin chen bzang po. In other words, celibate lamas (the monks Rin chen bzang po and Chos kyi rgyal mtshan, who were sPre'u zhing's abbots) were not considered superior to noncelibate lamas, the householders Seng ge sgra and Rin chen rgyal mtshan. Less than a

---

[472] Lévi-Strauss 1963, 50 (Lévi-Strauss 1958, 61: Sans doute, la famille biologique est présente et se prolonge dans la société humaine. Mais ce qui confère à la parenté son caractère de fait social n'est pas ce qu'elle doit conserver de la nature : c'est la démarche essentielle par laquelle elle s'en sépare. Un système de parenté ne consiste pas dans les liens objectifs de filiation ou de consanguinité donnés entre les individus; il n'existe que dans la conscience des hommes, il est un système arbitraire de représentations, non le développement spontané d'une situation de fait.)

[473] See II.4. for details.

century later, Seng ge sgra's biography is cut by half in ST2 and his descendants are wiped out from the genealogy. Although we can only speculate on the reasons for this change, it might have to do with the growth and influence of monasticism, maybe spearheaded by the development of the nascent dGa' ldan order. Another example is the relative importance of Don grub dpal and his cousin, Sangs rgyas yon tan. When reading ST2, Don grub dpal seems absolutely preeminent. External historical accounts and records of teachings received show, however, that although Don grub dpal was sPre'u zhing's abbot, Sangs rgyas yon tan was considered in some circles to be the main teacher in the gZhung valley at that period.[474]

Whatever the reasons for these changes are, they show that a lineage is an artificially built representation imbued with the ethos of the time at which it was created. As argued in Chapter I.1, it aims at conveying a sense of belonging, a "family spirit," to its members, and at presenting credentials and a sense of its importance to other lineages. A lineage, therefore, is not only a succession of masters, but a selection of representatives of a brand, here the "rNgog tradition."

Lineage or order?

At some point in the evolution of the lineage, when it becomes an institution with more assets than just knowledge and some religious articles or relics passed from master to disciple, its status evolve towards an "order" or a "sect" (*chos lugs*). The distinction between the two is defined as follows by Matthew Kapstein:[475]

> By sect, I mean a religious order that is distinguished from others by virtue of its institutional independence; that is, its unique character is embodied outwardly in the form of an independent hierarchy and administration, independent properties and a recognizable membership of some sort. A lineage on the other hand is a continuous succession of spiritual teachers who have transmitted a given body of knowledge over a period of generations but who need not be affiliated with a common sect.

David Germano furthers the definition of "sect" by determining six criteria that can help distinguish whether a given affiliation is considered an independent sect, or simply a movement. It may be helpful to use each of these six criteria with regards to the rNgog family lineage to see whether it could be considered to be an order:[476]

- *a clearly identified founder*: if one is to believe the description of the *Rosaries* starting with Mar pa's biography, the founder is Mar pa.
- *a distinctive body of literature specific to it*: the seven maṇḍalas. Although they were defined quite late with this phrase, there was early on an awareness of a distinctive

---

[474] Compare the rNgog lineage of *Hevajra* in KGNDdkar chag, 21 (Chos kyi rgyal mtshan → Sangs rgyas yon tan → Byang chub dpal ba), and that of ST2, 32.6 (Chos kyi rgyal mtshan → Don grub dpal). See also Sørensen 2007, 172. See the relevant passages in II.3.4.

[475] Kapstein 1980, p. 139.

[476] https://collab.its.virginia.edu/wiki/thlencyclopedias/Tibetan%20Buddhism.html (accessed 2017.09.25)

"rNgog Teaching" (called *rngog chos*; *pha chos*; *rngog pa'i chos skor*) that was the collective good of all religious members of the family lineage.

- *statements of identity separate from other religious movements*: one does not find in the *Rosaries* very clear statements of a distinct rNgog pa bka' brgyud identity, although ST2 is more specific in that regard. When for instance the author of ST1 pays homage to "bKa' brgyud masters", in ST2 the homage is to "the Venerable Mar rNgog, who are the top crown jewels among bKa' brgyud jewels." The family lineage is seen to have a distinct identity (for instance in the expressions *brgyud pa gong ma* or *brgyud pa 'og ma*), as is the rNgog tradition (*rngog lugs*) of specific tantras. The two do not seem, however, to lead to specific statements of identity.
- *centers with permanent buildings*: sPre'u zhing was founded in the early 13th century and soon became a monastery. Although there were branches in the form of alternative houses and retreat places in the gZhung valley, no additional temple or monastery affiliated to the rNgog seems to have been founded elsewhere. In biographies of people related to the rNgog, they are initially associated with "gZhung" (the valley's name) then with sPre'u zhing (the temple's name).
- *a shared administrative hierarchy*: rNgog family members have specific titles, most significantly *bla ma* for the lineage-head and *slob dpon* for his brothers and heirs, but they do not seem to have developed a very specific hierarchy. The titles change with time, as will be seen below, and may be more representative of the larger socioreligious situation.
- *common ritual activities such as pilgrimages and festival events*: no pilgrimage or festival is mentioned in the *Rosaries*, but the relics of Mar pa and later rNgog masters were a center of attraction for students of the rNgog traditions, especially after the rNgog family ceased to play a significant role in the transmission of the rNgog tradition.[477] No direct mention of it is made in the *Rosaries*, but it seems obvious that there were ritual activities associated with the rNgog traditions practiced in sPre'u zhing, such as group practices of *Hevajra* or *Nairātmyā*.

From this, we cannot conclude that the rNgog lineage considered itself an independent order, although it did have some characteristics that made it stand out as an independent movement and a distinct tradition. A more political identity started to be created in the 15th century, which was a time of intensification of sectarian distinctions, especially in Central Tibet where sPre'u zhing was located. It is significant that most historical sources, whether written inside or outside of the lineage, were composed at that time, and that the expression *mar rngog* appears in ST2 (composed in the 1430s), but not in ST1.[478] It is possible that there were attempts to institutionalize more visibly the rNgog lineage in the 15th century, but they were not successful. A consequence of this failure to gather the characteristics of an independent order was that the rNgog lineage stopped to be essentially hereditary at that time. Despite the efforts made to further the lineage in the gZhung valley for several generations, from that time onwards the rNgog traditions continued more vigourously within other orders which had managed to reach a larger size.

---

[477] See chapter II.5.

[478] ST2, 25: "I respectfully pay homage to the feet of the Venerable Mar rNgog" (*rje btsun mar rngog zhabs la gus pas phyag 'tshal lo*

Hereditary lineage

Although the rNgog do not appear to have perceived themselves as a distinct *order*, there are clear statements in the *Rosaries* that indicate that they saw their movement as distinct from others. A large part of that distinction comes from the fact that they were a family. As argued above, religious lineages are modelled on family lineages. In Tibet, the phenomenon of hereditary lineage was common, particularly between the 10th and 12th centuries. The most well-known and long-lasting example is that of the ’Khon lineage that founded Sa skya monastery and gave rise to the Sa skya order.[479] Its actual head, the 42nd Sa skya throne-holder (*sa skya khri ’dzin*), was enthroned in April 2017 while his father, the 41st throne-holder, was still alive. There are many more examples of Tibetan families that maintained a religious tradition over several generations. In the present dissertation are mentioned the cases of the Klog skya, ’Chims, Mes, rDog, Ram, rTsags, and sNgo tsha families.[480] Other famous examples are the Zur[481] and the gNyos.[482] There are also examples of masters who were householders and designated their son as their main heir but whose lineage did not continue in the family because the son died: two famous cases are Mar pa, whose son mDo sde died prematurely, and ’Brog mi Lo tsā ba, whose two sons also died early, one while travelling in India, the other killed by Rwa Lo tsā ba.[483] Another, widespread, type of hereditary religious lineage is when a family rules over a monastery. In this case, successive members of the family, typically ordained uncles and nephews or brothers, become abbot of the monastery. Examples are the families behind ’Bri gung Monastery (the sKyu ra family of the founder ’Jig rten mgon po),[484] sTag lung Monastery (the Ga zi),[485] gDan sa mthil Monastery (the Rlangs lha gzigs),[486] Zhwa lu Monastery (the lCe),[487] Rwa lung Monastery (the rGya family of the founder gTsang pa rgya ras),[488] and so on.

It is important at the outset to consider whether these examples represent different types of hereditary lineages, and how we could classify them in a meaningful way. Different categorizations are possible in terms of social and religious status.

With regards to social status, Geoffrey Samuels distinguishes in the chapter “Lamas, monks, and yogins” of *Civilized Shamans*, non-celibate lamas in hereditary lineages of high social

---

[479] See e.g. Dhongthog 2016; Cassinelli & Ekvall 1969.

[480] See in part II.2.2. and II.3. for details.

[481] Dudjom 1991, 617-647.

[482] Aris 1989; Sørensen and Hazod 2007, 381-385 and 671-684.

[483] Stearns 2001, 213, n. 39.

[484] Sørensen and Hazod 2007, 718-736. The succession ceased to be hereditary to become a lineage of incarnation with the Che tshang and Chung tshang incarnations in the 17th century.

[485] Sørensen and Hazod, 740-755. Two main monasteries (Ya thang and Ma thang Ri bo che) were founded after a schism in the family. The Ga zi lineage ruled in both. The hereditary system also changed to an incarnation line in the 17th century.

[486] Czaja 2015. The monastery was transmitted to the Zhwa dmar incarnation line in the early 16th century.

[487] Tucci 1949, 656-662.

[488] See Vitali 2004 and Walther 2017.

status and non-celibate village lamas of more modest status.[489] All cases mentioned in the previous paragraph represent aristocratic families with some economic and social capital that came to play a role in the religious life of, in most cases, Central Tibet. We could therefore consider that they all fit the first category. As far as the latter category is concerned, they are better known through modern ethnologies, such as the one by Charles Ramble on the Bon po lamas of Lubra,[490] of Nicolas Sihlé on the tantrists (*sngags pa*) of Chos ’khor in Mustang,[491] or the *ser khyim* from Ding ri in Southern Tibet studied by Barbara Aziz.[492]

There are several problems with this distinction, however. First, a problem of source: in historical research based on textual material such as the present one, it is generally only the lineages of higher status that leave a trace. It is because these social groups had a substantial economic and religious capital that they gathered enough symbolic power to actually write historical or hagiographical narratives through which they are remembered. The case of local archives such as the ones now used by Charles Ramble are very rare, not to say inexistent in pre-17th century Tibet. It may be possible to have an indirect understanding of low status hereditary lineage through some reference in biographies or other narratives, but the output may be rather meager.

Second, if all the cases mentioned above are hereditary lineages, not all are non-celibate. In fact, many hereditary lineages were transmitted from uncle to nephew (*khu dbon*) instead of from father to son, and this situation became more widespread from the 13th century onwards with the development of monasticism in Central Tibet. If one takes the example of the rNgog lineage alone, although the first four generations were non-celibate, the next four were ordained monks and abbots of sPre’u zhing monastery. In at least two cases (Kun dga’ rdo rje and Byang chub dpal), they are pictured as having children and being sPre’u zhing abbot, and in one case (Don grub dpal), he was first ordained and later had a wife and child, while remaining sPre’u zhing abbot.

It is clear therefore that Samuel’s classification, although it mirrors the general distinction between high religion and village religion, cannot properly account for the historical situation of hereditary lineages, as, first, there is a more diverse spectrum of possibles statuses, and second, the situation tends to evolve in time. Nicolas Sihlé departs from Samuel’s distinction between non-celibate lamas of higher or lower status by distinguishing between two main forms of religious specialists: the monk and the non-celibate tantrist. In brief, the former is generally associated with purity of renunciation and production of merits and the latter by powerful as well as violent rituals and the sins of worldly life.[493] This distinction corresponds to the central question of Sihlé’s work, the violent rituals performed by local tantrists, and one may wonder if it may correspond to the situation of the rNgog and their forefather Mar pa. Here again, it is difficult to bring a satisfying answer based on our sources. First, we face the

---

[489] Samuel 1993, 288-289.

[490] As in Ramble 1984 for instance.

[491] Ramble 2008, 2010, 2012a and 2012b.

[492] Aziz 1978.

[493] Sihlé 2013, 16 & 21-22, and the conclusion pp. 263-277. Characteristics summarized p. 272.

duality of the rNgog hereditary lineage: some were married, some were monks. In the case of Mar pa, it is possible that the descriptions of his practice of entering another's body is an example of such powerful ritual: it is not particularly pure (the examples are often a source of laughter, and in all cases he enters the body of an animal) and it is a way to transcend death. His journey amongst siddhas also contrasts with that of Tibetan monks who travel to Indian monasteries and learn from paṇḍitas. In the case of Chos rdor, mDo sde and other householders of the rNgog family, it is difficult to evidence. Only one individual, rGyal po dga' (1246-1311), has the title *sngags pa*. He was a religious householder who received the rNgog transmissions and passed them on to the next generation, but it was his brother, the monk gZi brjid grags pa, who was sPre'u zhing abbot and was called *bla ma*. Nothing specific is known about him, but it is described that he received non-rNgog transmissions such as the "poison empowerment" (*dug dbang*) of Maheśvara. A similar practice, the "weapon empowerment" (*mtshon dbang*) is received by some of his descendants, Seng ge sgra and Rin chen rgyal mtshan, also householders. It is thus possible that such a duality exists, but it is not obvious in sources such as the *Rosaries*, where the rituals actually practiced by specific individuals are not described. As acknowledged by Sihlé (p. 273), the case of great religious masters in some measure elude this distinction as it includes both poles of a strong power and moral purity.

Thus we see that neither of these classifications fit the case of the rNgog, who formed an hereditary lineage yet not necessarily a non-celibate one. In fact, when taking into account the various cases of hereditary lineages, there seems to be:

- Hereditary lineages where the main lama is non-celibate, such as as 'Khon of the Sa skya order;
- Hereditary monastic lineage, such as the monastery abbots mentioned above;
- Hereditary mixed lineage, with both monastics and householder, such as the rNgog family.

One can note an historical evolution towards more monasticism from the 13th century onwards, and it is likely that the three alternative models described derive from various ways to cope with the highest symbolic capital associated with monasticism. Although hereditary non-celibate lineages abound in the 11th and 12th century, they soon gave way to celibate lineages, hereditary or not. A conclusion we may draw from this is that although the hereditary lineage was the most natural for Tibetans (and it would be the task of another research to understand why), the constraints it faced—the need to produce heirs able to properly hold and transmit complex traditions for instance—led to a progressive disappearance of this model of transmission, and increasingly, in the case of high-status lineages, to its replacement with lineages of incarnation. The model continued in lower status lineages (such as the *sngags pa* village-lineages described by Sihlé) because of the lesser emphasis placed on the integrity of the religious lineage.

What distinguishes the rNgog from other lineages and from lower-status religious lineages is their religious legitimacy. At no point in the *Rosaries* is there a clear statement that the symbolic power of the rNgog lineage lies in their "bone." In fact, the bone that is mentioned the most often is not theirs but Mar pa's. It is therefore important to examine how the

hereditary and the religious are fused in the *Rosaries* so as to optimize the legitimacy gained by both aspects.

3.2 Articulation of the hereditary and the religious in the *Rosaries*

Structural fusion

The structure of the *Rosaries* is as follows:

- Mar pa's Biography, starting with Mar pa's ancestry and stopping midway in Mar pa's life-story (when he arrives in India, with reference to another text). This includes the most extensive treatment of Mar pa's ancestors in any biography (ST1, 2.1-3.5; ST2, 26.2-27.7).
- The rNgog ancestors' genealogy. The section starts with the words "[Mar pa's] disciple (*slob ma*) was lama rNgog Chos rdor" and then continues with the first rNgog ancestors, until Chos rdor. (ST1, 3.5-6.4; ST2, 27.7-30.8)
- The family lineage from Chos rdor to his son mDo sde and on to the various lines created by the latter's descendants. The two main lineage segments are the *brgyud pa gong ma gtsang tsha rgyud* and *brgyud pa 'og ma rgyal tsha rgyud*. Only male children (*sras*) are mentioned, except a few daughters (*sras mo*) in the first two generations. The name of the wives (*yum*) are provided. It is called the "human line succession" (*mi rgyud rim pa*) (ST1, 6.4-7.3; ST2, 30.8-32.4)
- The religious lineages: the first mentioned is the "dharma lineage" (*chos kyi brgyud pa*), starting with Vajradhara, followed by Tilopa's four masters, Tilopa, Nāropa, Mar pa, Chos rdor, etc., considered identical to the *Hevajratantra* lineage. Then are listed the lineages of other tantras. The first four (*Hevajra, Pañjara, Catuṣpīṭha, Mahāmāyā*) go through Mar pa, but not the others (*Saṃputa, rTsa ltung rgya chen 'grel, Mañjuśrī,* and *Black Jambhala*). As a whole, these lineages are called the "religious line successions" (*chos rgyud kyi rim pa*). (ST1, 7.3-8.6; ST2, 32.4-33.6)
- Then follow the biographies of each of the significant family members (ST1, 8.6-19.5; ST2, 33.6-45.5). The family lineage is repeated in the end of the text with the year of birth and age at death of all family members (ST1, 21.8-23.3; ST2, 47.6-48.8).

If we examine this narrative structure, it appears that there is first a description of Mar pa's family lineage, followed by his own life-story, and then the story of rNgog's ancestors, followed by their life-story. The impression conveyed by this presentation is that Mar pa and the rNgog belong to the same family, as if the two lines were two segments of the same lineage. It is particularly telling that Mar pa's own blood heir is not mentioned and thereby devaluated in favour of rNgog, whose genealogy is inserted at this point.[494] The *Rosaries* can therefore be seen as a textual tool designed to legitimate the rNgog lineage, by granting them greatness through two intermingled hereditary and religious genealogies. As Michel de Certeau remarked:[495]

---

[494] In that view, it is strange that ST1 uses the word *slob ma* rather than *sras* or *thugs sras* to introduce Chos rdor as Mar pa's disciple. The word *slob ma* is not used in ST2, 27.7, which simply states: *bla ma chos rdor ni* […].

[495] Certeau 2011 [1975], 326.

> Ainsi pour indiquer chez le héros la source divine de son action et de l'héroïcité de ses vertus, la vie de saint lui donne souvent une origine noble. Le sang est la métaphore de la grâce. D'où la nécessité de généalogies.

In the case of the rNgog, there is a double genealogy: great ancestors and great religious predecessors both grant their nobility and prestige.

Mar pa as the ancestor

The mingling of the genealogy of the Mar pa and rNgog families is a literary tool that makes the rNgog appear as Mar pa's legitimate heirs. Another way to achieve this is through mDo sde himself, and his direct relationship with Mar pa. First, the name mDo sde was certainly not chosen by chance. Although the *Rosaries* do not remark on this,[496] it seems clear that Chos rdor's son was named after Mar pa's own son, Dar ma mdo sde, called simply mDo sde in the *Rosaries*.[497] The story of the latter's death is well-known thanks to the extensive narrative created by gTsang smyon He ru ka, prefigured in the *Rosaries'* statement that he died falling off a horse when returning from his uncle's wedding. Although this version is disputed in various ways,[498] there is no doubt that Mar pa's legacy was not continued in his estate at Gro bo lung,[499] a fact alluded to by a prophecy found in Mar pa's biography written by rNgog mDo sde.[500] When Chos rdor called his son mDo sde, it was surely a reference to Mar pa's son Dar ma mdo sde, who may have died already. One cannot speculate on the psychological reasons behind this, but there is a strong possibility that by this move, Chos rdor introduced his own son as replacing Mar pa's.

This impression is reinforced by a declaration Mar pa makes to Chos rdor in the *Rosaries*:[501]

> When [mDo sde] reached his fourth or fifth year, […] father, mother and son, with Mi la ras pa as a servant, went into the master Mar pa's presence. They received from him the two empowerments of Nine Deities [*Hevajra*] and Fifteen Female Deities [*Nairātmyā*]. One day at the Dharma place where they were receiving the tantras, the boy would sometimes climb on his father's

---

[496] *dGe ye History*, 30b5, says that it was Mar pa who named him mDo sde: *rngog zhe sdang rdo rje la mar pas ming mdo'i sde zhes btags te*. This is possible, but it is doubtful that he was initially called Zhe sdang rdo rje. This is an initiatory name and became mDo sde's penname.

[497] ST1, 2.4.

[498] Tsangnyön 1982, 156-181. See a detailed account of the various versions surrounding Dar ma mdo sde's disappearance below, chapter II.3.2.2.3. In short, according to Rwa Lo tsā ba's biography, it was because Rwa lo cursed Mar pa's son that he died. According to the *Zla ba chus shel gyi phreng ba*, however, this is nonsense, and Dar ma mdo sde actually died after his father (see Cuevas 2015a, Decleer 1992, Ducher 2016a, 105-108). The *Rosaries* state in a note that all of Mar pa's sons from his two wives died before he did (ST1, 2.4) but this is contradicted by the fact that his son Bya ri 'khor lo desecrates his relics after he died (ST1, 14.2).

[499] Ducher 2016a.

[500] See translation in Ducher 2017, 289: Your family lineage will disappear like a sky-flower / But your religious lineage, with the continuity of a river, / Will be uninterrupted (MKNT, 183).

> shoulder and pull his hair and beard, and sometimes would pull the master's hair and beard. His father said "this is not comfortable! Tomorrow, I shall not bring him along!" but the Venerable [Mar pa] made a declaration: "Do not leave the kid behind, bring him along! He is called rNgog gZhung pa and will become a meritorious one. It is because he will say "I have met with the Venerable Mar pa" that my lineage will come to have a following!"

This passage is studied in more detail below (II.3.2.), but what is noteworthy is the way rNgog mDo sde is presented as the one through whom Mar pa's lineage continues. This direct relationship between Mar pa and mDo sde is alluded to in the lineages of *Pañjara*, *Catuṣpīṭha* and *Mahāmāyā* that go directly from Mar pa to mDo sde, although the main dharma lineage also passes through Chos rdor. Thus, like in the case of the genealogies, mDo sde is provided with a double ancestry, descending both from his father Chos rdor and his spiritual father Mar pa.

Mar pa's Relics

A third device used to present the rNgog as Mar pa's heirs are Mar pa's relics that are carefully retrieved by mDo sde. The topic of relics and these events are examined in detail below (section II.3.2.3.). In short, the *Rosaries* describe, for two fifths of the section on mDo sde,[502] how he received Mar pa's bone relics from his mentor, the *ḍākinī* Jo mo sGre mo, and from Mar pa's granddaughter. The way sGre mo obtained the relics is not explicit. As for Mar pa's granddaughter, the *Rosaries* explain that Mar pa's son was squandering them in Gro bo lung, selling Nāropa's relics and hanging Mar pa's bones on his house as a charm to protect it from harm. Mar pa's granddaughter, who was also mDo sde's disciple, retrieved them. mDo sde invited her in great pomp to the gZhung valley, making her the guest of honor of a religious council and she gave all the relics to him. As this event took place in the end of mDo sde's life, he was not the one who enshrined them in a stūpa. At his death in 1154, his three grandsons (rGyal tsha Ra mo and rDor seng, and gTsang tsha Kun dga' rdo rje), headed by Ra mo, enshrined his relics together with those of Mar pa in a silver reliquary. After the death of Ra mo and rDor seng, Ra mo's two sons inherited the house, and Kun dga' rdo rje inherited the reliquary. He built the sPre'u zhing temple to house it, and according to dPa' bo gTsug lag phreng ba, it was the relics' blessing that insured the success of the newly founded monastery, which became the main seat of the rNgog pa lineage.[503] They remained sPre'u zhing's main attraction up until the 20th century, as demonstrated in several travel guides.[504] In 1848 for instance, 'Jam dbyangs mkhyen brtse dbang po went in pilgrimage to sPre'u zhing although the temple had not been taken care of by the rNgog for at least two centuries. On his way, he had a vision of Mar pa and "rNgog," received direct instructions from Mar pa, and was prompted to request Kong sprul to compile the KGND.

---

[502] ST1, 12.8 to 14.6.

[503] *mKhas pa'i dga' ston*, 779.

[504] See e.g. Akester 2015, 266, and below section II.2.3. for details.

The section of relics is that where the words *gdung*, *gdung rus*, *gdung khang* and *gdung rten* appear the most. In fact, in ST1, all occurrences of the word *gdung* except one[505] refer to relics and particularly to Mar pa's. The only instance of the expression *gdung brgyud* referring to the rNgog lineage is when it is used instead of *mi brgyud* in the *incipit* of ST2. It is possible that the word *gdung brgyud* was not as widespread in the first half of the second millennium as it was later, and that hereditary lineages were not as regularly described by these term as the classification presented earlier suggests. If the "bone" can have power,[506] however, in the rNgog history it is not the inner bone that is powerful, but that which remains after the lama dies and that is kept in a stūpa. The possible word-play on bone in the *Rosaries*, and the fact that the bone meant is Mar pa's, is another way to physically integrate Mar pa in the rNgog lineage, thus gaining his symbolic power. This way, mDo sde's efforts to assemble Mar pa's relics and his successors' mingling them with those of their ancestors achieved in a concrete fashion what the *Rosaries*, mDo sde's name, and the direct transmission between Mar pa and mDo sde also aimed to achieve: the localization of Mar pa's true spirit in the gZhung valley and in the rNgog, and the legitimacy of their religious lineage by the appropriation of Mar pa's status.

3.3. Transmission of capital

It has been argued in the preceding section that although the rNgog was an hereditary lineage, it could not be characterized by non-celibacy and its legitimacy was mostly not derived from their family descent but from their religious ancestors. It therefore remains unsettled why in this case the hereditary lineage was favored over the non-hereditary lineage, and why it did not succeed in reproducing itself in the long run. In order to suggest some answers to this quasi-metaphysical search of reasons, I take into consideration that the main role of lineages is the transmission of knowledge, legitimacy, and power, in other words of various types of capital that can have an effect in the social world where the rNgog lived. For this, we may first consider that the main justification for a hereditary lineage is to transmit capital through descent. Regarding descent, the *Encyclopedia Britannica* states:

> Descent [is] the system of acknowledged social parentage, which varies from society to society, whereby a person may claim kinship ties with another. If no limitation were placed on the recognition of kinship, everybody would be kin to everyone else; but in most societies some limitation is imposed on the perception of common ancestry, so that a person regards many of his associates as not his kin.
> The practical importance of descent comes from its use as a means for one person to assert rights, duties, privileges, or status in relation to another person, who may be related to the first either because one is ancestor to the other or because

[505] ST1, 15, where it is expressly mentioned that Kun dga' rdo rje should continue the family lineage hence not become a monk: *gdung rgyud spel dgos pa yin mod*.
[506] As suggested for instance in Sihlé 2013, 148-149.

> the two acknowledge a common ancestor. Descent has special influence when rights to succession, inheritance, or residence follow kinship lines.[507]

The important point in this description is that descent defines kinship, and kinship in turn conditions inheritance. The typical goods inherited through family descent are immaterial ones such as name and status, and material ones such as personal property and real-estate. In religious lineages, various types of goods can be inherited. They can be immaterial like the knowledge and power transferred through an empowerment, an exegesis or a reading transmission. There can also be material goods such as statues or religious articles. For instance, according to Mi la ras pa's biography by gTsang smyon He ru ka, the transmission from Mar pa to rNgog Chos rdor was as follows:[508]

> To lama Ngokpa he gave the heart-instructions on the method of explaining the tantras from the perspective of the six parameters and the four modes, strung together like pearls, as well as Nāropa's six ornaments, his ruby rosary, a pair of ritual ladles for making burnt offerings, and an Indian commentarial text. Then he said, "Benefit beings by explaining the dharma."

When the lineage grows, there are more concrete goods to be transferred, such as a monastery and assets, social status and titles, disciple and patron networks, and so on. The reason why the lineage-model of authority develops when political power is decentralized is that in the absence of State regulations, individuals need rules to define their heir and what they should inherit. Descent as it is defined in family or clan lineages is one of the ways societies deal with this problem. Religious groups in similar circumstances, in India and in Tibet, developed a similar model to regulate the way disciples inherited their masters' material and immaterial goods.

As a heuristic device, I propose to replace the term "goods" with that of "capital." This latter term is generally understood as economic capital,[509] but in the social sciences, and especially sociology, a large array of types of capital were conceptualized in order to account for the differentiations of the social world, and the ways agents in social fields use various types of capital to reach a dominant position in their field. The French sociologist Pierre Bourdieu (1930-2002)[510] typically distinguishes four species of capital, although he also sometimes

---

[507] https://www.britannica.com/topic/descent

[508] Tsangnyön 2010, 100.

[509] See for instance the definition of "capital" in the *Oxford Dictionary of Sociology* (Scott and Marshall 2005, 50) as "one of four factors of production—the others being land, labour, and enterprise").

[510] I am reading Bourdieu in French and will in most cases refer to his French works, especially in the case the Bourdieu 2015 and Bourdieu 2016a, which are untranslated editions of his lectures at the Collège de France. These lessons offer an easier access to his thought than his other published works, which are often in a very technical terminology. I beg the reader to bear with this and to take into consideration the fact that this dissertation is written in the framework of the French academic field.

speaks of other types as well.[511] The four are here described by his colleague Loïc Wacquant:[512]

> The system of dispositions people acquire depends on the (successive) position(s) they occupy in society, that is, on their particular endowment in *capital*. For Bourdieu, a capital is any resource effective in a given social arena that enables one to appropriate the specific profits arising out of participation and contest in it. Capital comes in three principal species: economic (material and financial assets), cultural (scarce symbolic goods, skills, and titles), and social (resources accrued by virtue of membership in a group). A fourth species, symbolic capital, designates the effects of any form of capital when people do not perceive them as such […].

I argue that the polymorphic notion of capital is well suited to describe traditional societies where economic capital, although not absent, is not as central as in complex, modern societies. Bourdieu started his career in the sixties by studying the Algerian Kabyle society,[513] where honor regulates many interactions, and in some ways this approach determined the formation of his later theories. In the next part, the *Rosaries* are analyzed from the perspective of these species of capital in the hope that this may illuminate some aspects of premodern Tibetan society, and determine the position of the rNgog in a posited religious field.[514] The reason why I examine types of capital rather than Bourdieu's related notions of field is that "the structure of distribution of capital is the structuring principle of a field"[515] and "this structure of the principles of hierarchical organization is meant to make [us] understand what is it that makes people be where they are and that, given where they are, they do what they

---

[511] Bourdieu is not the only one, nor the first, to speak of various species of capitals. The notion of "human capital" was developed in the 60s, but still relied quite a lot on the definition of economic capital (Bourdieu 2016, 248-249). Later on, Bourdieu himself sometimes dropped social capital by including it in cultural capital (*Ibid*, 245; the vol. 31/1 (1980) of the *Actes de la Recherche en Sciences Sociales* was nonetheless a special issue on the topic with an introduction by Bourdieu), and also spoke of literary, artistic, scholastic, political capitals, and so on (see a general index of his works on Gilbert Quélennec's blog: http://pierrebourdieuunhommage.blogspot.fr/, accessed on 24.07.2017).

[512] Wacquant 2007, 268.

[513] Bourdieu 1972 (2000).

[514] I use the term "posited religious field" here because according to Bourdieu a field is a social space that needs to be conceptually defined and constructed by a precise analysis of social data. The notion of field has been questioned (for example Lemieux 2011), and it is generally considered that fields only appear in differentiated social spaces. In Bourdieu 2016b for instance, Bourdieu argues that Manet was a "symbolic revolutionary" who created the modern artistic field in the 19th century (hence that there did not exist before that an artistic field independent in its values from the society in which it is contained). In Bourdieu 1972 (2000), which describes the Kabyle society, the concept of field is not present. Thus, the religious field of premodern Central Tibet is only posited here in order to frame the analysis of the types of capital that may influence the working of this field. Bourdieu's example for a field (which is a space of social competition structured around specific issues) is that of a game with its own rules, with players who can be very skilled in that game, but not necessarily in others. The religious life of premodern Central Tibet seems to correspond to this. In the absence of a more thorough analysis, however, it is difficult to plainly speak of a "religious field," hence it is only posited.

[515] Bourdieu 2015, 516: "La structure de la distribution du capital est le principe structurant d'un champ."

do."[516] In other words, understanding the principles of hierarchical organization (which are ruled by the distribution of capital) may explain the workings the field, and why some lineages succeed, and some not. To my view, that of an historian of Tibet's religious history, Bourdieu developed a powerful and versatile theory, which can "guide the vision of the researcher […] and help him systematize his observations."[517] The hope is that this reflection may be a stepping stone for future research going into that direction.

The underlying question of this dissertation is: why do some lineages dominate the religious field? Why are they successful? Why does a lineage end at some point? Often, the question is answered with Weberian analyses, typically the various types of domination—legal, traditional, and charismatic—and the question of legitimacy. To paraphrase in a few words a larger and more complex debate, Weber argues that society is shaped by individuals, and Bourdieu that individuals are shaped by society.[518] Although the two approaches have their value, my own dispositions lead me to a bourdieusian approach that I find enlightening to describe a world like Tibet where religion played a crucial role. Premodern Tibet was obviously not a society like ours; by approaching the rNgog as being part of a "Tibetan religious field," we may be able to unravel some functions of this field and understand it better, or at least in a different light. In what follows therefore, I do not focus on ideal-typical presentation of individual lineage-holders, but on the distribution of capital owned by different members of the rNgog family, as we can know it through the *Rosaries*. Although there are of course political reasons for success or failure that strongly shape the course of events in the short term, I nonetheless feel that tackling the question from the perspective of types of capital can help explain why, and how, some players come to the fore, or on the contrary recede to the background.

Economic capital

When reading hagiographies filled with spiritual learning and mystical experiences, one may fantasize a moneyless traditional Tibet where individuals are merely interested in Enlightenment and the path towards it. As is obvious to anyone studying Tibet and as mentioned above (section I.2.2), although economic capital is not as central as it may be in a capitalist complex society and is largely euphemized in hagiographical writings, it remains crucial.

---

[516] *Ibid.*, 513: "Cette structure des principes de hiérarchisation est censée me faire comprendre ce qui fait que les gens sont là où ils sont et que, étant là où ils sont, ils font ce qu'ils font. "

[517] Bourdieu 2007, 387, quoted in Travers 2009, 28: "La théorie a pour fonction de guider le regard du chercheur (*theorein* signifie voir) et de lui permettre de systématiser ses observations."

[518] This is a simple way to state a basic difference between the two approaches. To better grasp the difference, see Bourdieu 1971, "Interprétation de la théorie de la religion selon Max Weber," which is the point where Bourdieu started to develop his concept of field. See p. 16: "pour en finir complètement avec la représentation du charisme comme propriété attaché à la nature d'un individu singulier, il faudrait encore déterminer, en chaque cas particulier, les caractéristiques sociologiquement pertinentes d'une biographie singulière qui font que tel individu s'est trouvé *socialement* prédisposé à éprouver et à exprimer avec une force et une cohérence particulière des prédispositions éthiques ou politiques déjà présentes, à l'état implicite, chez tous les membres de la classe ou du groupe de ses destinataires." See also a summary of the two approaches in Verter 2003, 153.

A rural way of life

Economic capital and its transmission by gift, bequest, purchase or exchange is crucial to form, prolong, and strengthen a lineage. Mar pa's biography, for instance, emphasizes the importance of gold to receive any teaching. Many of Mar pa's actions—traveling with gNyos Lo tsā ba, leaving 'Brog mi's hermitage, touring Tibet, etc.—are motivated by his need for gold, indispensable if he is to obtain any transmission in India. The commentaries on the *Hevajratantra* written within the rNgog clan all have an "historical" section where the disciple—singularly Mar pa and rNgog Chos rdor's—economic efforts to acquire tantric transmissions are emphasized. Although in India it seems that gold was an important currency, in Tibet "offerings" are much more diverse. In this part and the following, I do not take into account the narratives on the rNgog ancestors, where precious stones, metals, etc. are mentioned. These memories of a time long gone, although they may not be devoid of any truth, do not have anything in common with Tibet in the 12th or 14th century, and I therefore choose to exclude them from my analysis. Zhe sdang rdo rje's *Jewel Ornament-Like Commentary on the Two Segments* describes Chos rdor's relationship with Mar pa as follows, probably in the decades following the facts:[519]

> Lama [Mar pa] came to gZhung and [Chos rdor] offered to him seventy *'bri*, a felt [tent] and a dog, porcelain and a milk-bucket. Then again later, together with Mi la ras pa as a servant, he offered one hundred sheep and a parcel. Later again, he gave ten volumes of scriptures, the main one being the *Ratnakūṭa*. Although he offered all this, he did not receive all of the master's teachings. It is said that he did not receive [anything] else than *Pañjara*, *Hevajra*, *Catuṣpīṭha*, and *Mahāmāyā*.

The list of offerings presented by Chos rdor to Mar pa does not include gold but many assets that would be owned by pastoralists (cattle, yak-hair tents, dogs, milk-bucket), as well as a horse. In another passage, Chos rdor is said to have a disagreement with pastoralists of the neighboring valley because of pasture encroachments.[520] This draws the picture of Chos rdor as representing a rural elite possessing land and cattle. The economic capital in the possession of Chos rdor was not limited to this, as he also offered sūtra manuscripts to Mar pa and to another of his teachers, Khams pa Shes rab rdo rje.[521] The question of religious texts will be

---

[519] NKSB, 3: 19: *bla ma gzhung du byon pas 'bri gnag bdun cu tham pa/ sbra khyi gnyis dkar mo gcig bzho zo dang bcas pa phul/ de nas phyis yang mi la thos pa dgas g.yog byas nas lug brgya thum zhig phul/ yang phyis gsung rab phal pho ches sna drangs pa'i po ti bcu yang phul/ de rnams thams cad phul yang bla ma'i chos thams cad ma gnang/ gur dgyes rdor gdan bzhi ma hā mā ya de rnams las ma gnang gi gsung ngo.* Of note is that sGam po pa's biography of Mar pa gives exactly the same list (DK-DZO, 11: 17.4), but with *dkar yol* (porcelain) instead of *dkar mo* (mutton?). The list of things offered differs in the *Rosaries* (see e.g. ST1, 9) and in later commentaries on the *Two Segments* (e.g. NKSB, 12: 39), while remaining largely pastoralist goods. See an expanded version in Tsangnyön 2010, 74.

[520] ST1, 10: "Once, [rNgog] had a disagreement about pasture with the [people from] Yal pho mo **in Dol**. They had encroached on the lama's [territory] (by letting the cows and sheep of the upper [valley] graze freely) and caused him much harm."

[521] Bu ston's *Yogatantra*, 180: *gzhung ri bor shes rab rdo rje lo gcig du bstan nas mtshan brjod skor dang/ kri ya la sogs pa mang du zhus/ gsung rab dkon brtsegs dang nyid khri cha re/ rta 'tshal lu bya g.yu/ khrab dang gos gser la sogs pa'i zhabs thog che par byas te gshegs khar/*

addressed in more detail in the part on religious capital, but the fact that Chos rdor is able to invite to gZhung teachers such as Mar pa and Shes rab rdo rje for prolonged periods of time, and to receive their teachings against not inconsiderable remuneration is a testimony to his affluence and the power he could gain from it.

House

The main economic capital owned by a rural family is property, including fields and house. We have scant data on the houses built in the gZhung valley between the 11th and 16th century and on the way they were handed down from generation to generation, but it is useful to review this data in order to assess anthropologically the type of kinship model that the rNgog genealogy may embody. The little we know can be summarized as follows.[522]

In Chos rdor's time, the main residence of the family was a place called gZhung ri bo, or simply Ri bo, located at more than 4000 m of altitude in the higher slopes of the eastern part of the gZhung valley. The term Ri bo probably refers to the locality where a house was built at that time, Ri bo khyung lding. When Chos rdor invited Mar pa to the gZhung valley, they did not stay in a house but in tents set up in the lower part of the valley. mDo sde inherited the house but resided at the mouth of the gZhung valley, since at least the birth of his grandson Ra mo. This place, called Nya mo gyur (Nya mo skyur in ST2), is mentioned twice during mDo sde's life but not later. From this, we may infer that the rNgog owned land in both the lower and upper valley, and may therefore have had activities in both pastoralism and agriculture (but no data is provided on the subject).

mDo sde had six children, from two women. His main heir was Jo thog, the firstborn of his legitimate wife. Jo thog and his own children later lived in the house at Ri bo khyung lding. mDo sde had another son, Jo tshul, by a consort from gTsang. Neither Jo tshul nor his mother resided in gZhung. Jo tshul had two children, a daughter and a son, and at least the latter resided in gZhung since birth and was spiritually raised by mDo sde. When Jo thog died, his son Ra mo remained in Ri bo khyung lding. At that point, as pointed out above, a reliquary was erected containing the relics of Mar pa and mDo sde. Ra mo had a brother, rDor seng, also a religious master in his own right. When Ra mo died, his brother rDor seng remained the head of Ri bo khyung lding, as evidenced by the narratives in some of his outer disciples' biographies. It was only after rDor seng's death that the estate was divided in two between Ra mo's three sons and Jo tshul's one son, Kun dga' rdo rje. The former received the house and its assets, the latter the relics. This mode of inheritance points to the possibility that the two brothers Ra mo and rDo rje seng ge were living together in Ri bo khyung lding and may have been considered co-fathers of the offspring of one wife, Shi sha dur ma, said to be Ra mo's wife, according to the polyandric tradition still practiced in many Tibetan societies. In this case, one may wonder why Kun dga' rdo rje inherited the relics, which, as argued, are not trivial, although he was from an illegitimate branch. It is possible that rDor seng was in fact considered to be Ra mo's children's uncle. As he remained in the house until his death, it was only at that point that the transmission occurred, with the capital being divided between rDor

[522] For details see below sections II.3, II.4 and II.5.

seng's nephews (the sons of his brother) and great-nephews (the son of his cousin, Kun dga' rdo rje).[523] Whatever be the case (and it can only be conjectural given the scant data), the situation shows that there were strategies to keep the house undivided. It is equally possible that both rDor seng and Kun dga' rdo rje were seen as talented religious masters and thus legitimate heirs of the religious lineage, and thus that it was the religious lineage that governed the inheritance.

From that point onwards, there are two rNgog lines, the gTsang tsha in sPre'u zhing and the rGyal tsha in Ri bo khyung lding, with the former taking the lead, as suggested by it being referred to as the 'higher line' (*rgyud pa gong ma*). Kun dga' rdo rje had four children. Two became monks, one continued the family line, and the fourth, a doctor, is dropped from later accounts; he may or may not have had descendants. One of the monks, gZi brjid grags pa, founded a monastery affiliated to sPre'u zhing. From that point onwards, there seems to be two units with the same name: the house with the family lineage, and the monastery with the religious lineage (abbots). At the generation after gZi brjid grags pa, the monk Rin chen bzang po inherited sPre'u zhing, and two laymen had children. Rin chen bzang po and his lay elder brother Seng ge sgra both continued the rNgog religious line, but Rin chen bzang po alone inherited sPre'u zhing's abbacy. It was probably the third son, Chos rdor, who occupied the sPre'u zhing house with his five sons. No information is provided on where Seng ge sgra, his wife, and their three children lived, but it seems unlikely that they remained in sPre'u zhing. They probably created another house and another line of the family. This line is standing out in ST1 but completely absent in ST2 where Seng ge sgra's children are even not named. During the next generation, the first of Chos rdor's five sons, the monk Chos kyi rgyal mtshan, became sPre'u zhing's abbot. At least two of his brothers, the fourth Seng ge 'bum and the fifth Khrom rgyal ba, had children; the status of the other two is unknown. Seng ge 'bum's first son Don grub dpal became abbot after his uncle's death; the status of the other two is unknown. The elder of Khrom rgyal ba's two sons, Sangs rgyas yon tan, became an important religious master. Although it was his cousin Don grub dpal who was referred to as the "rNgog from sPre'u zhing," Sangs rgyas yon tan also attracted disciples and was referred to as Rin po che. It is known that his brother had two sons. One of them, Rin chen dpal bzang po, wrote several texts in a place called Brag dmar chos 'khor gling, which might be the name of the temple associated with the new house founded by his uncle Sangs rgyas yon tan as an alternative religious seat. Don grub dpal's son, Byang chub dpal, became sPre'u zhing's abbot after the death of his father. He was not a monk either but is depicted as he head of both the religious and biological lines. With regard to the "lower line," called rGyal tsha, no other name than Ri bo khyung lding is known until the 15th century. At some point in the late 15th century, a new temple, Thar pa gling, was founded.

From these observations, one can deduce that although the *Rosaries* can be seen as a genealogy describing the branches of the rNgog family, the religious lineage shapes the way the group is represented and the balance of power between brothers. ST1 and ST2 do not provide the name of any of the houses or religious seats. They occasionally give toponyms but

[523] Thanks to Nicolas Sihlé for pointing out this possibility for me, and a similar (but more complex) case described in Sihlé 2001, 77-78.

without detail on their location, which were probably obvious for the intended readers. On several occasions, the name of some children are provided without detail on their descent, and only two daughters are mentioned. In several cases some descendants are mentioned in ST1 but dropped in ST2. It cannot be excluded, and in fact it is likely, that not all lines of the two main branches are mentioned, but only those relevant from the viewpoint of the religious lineage. One may wonder therefore whether it is possible on the basis of this partial material that shows a clear bias in favor of the male kins of sPre'u zhing's abbots to draw any conclusion on the kinship system of the rNgog family between the 11th and 15th century.

Keeping this in mind, we may try to do this by comparison with anthropological studies of modern and pre-modern communities made in Tibet itself or in its borderlands. In *Civilized Shamans,* Geoffrey Samuel outlines four kinds of Tibetan communities in pre-modern Tibet, that he calls "centralized agricultural," "remote agricultural," "pastoral" and "urban communities."[524] According to him, the first model refers to agricultural communities in areas of relatively strong political centralization; they typically function with a household- rather that lineage-based kinship system (1). Remote agricultural communities on the other hand are the ones in areas of relatively weak political centralization with no estate system, limited tax obligations, and lineage rather than household kinship-systems (2). Pastoral communities generally follow a lineage-based kinship system (3), and the household-based kinship pattern predominates in urban communities (4).

Again, this comparison involves a few caveats. First, the political situations in the 11th or 15th centuries and that in the 20th century are different, as are data gathering in ethnography and in historical study like the present one. Furthermore, there are differences within these areas between higher and lower classes of society. Finally, despite Samuel's clear-cut division, according to Charles Ramble, the dialectic between kinship-based and residence-based organization of polities is far from settled and the field is actually in its infancy, with only so far descriptions of isolated cases and no far-reaching generalization.[525]

That being said, although the location of the gZhung valley corresponds to case 1 described by Geoffrey Samuel, the organization outlined above does not resemble that of a household-based system. The picture drawn in the *Rosaries* (maybe because of their religious nature) is that of a patrilinear lineage with the rNgog's "bone" being transmitted from generation to generation with little reference to household or residence, the name and history of the houses being only provided in outer sources. No information is provided on taxation. Although gZhung may have been taxed from the time of the Mongols (13th c.) or during the Phag mo gru pa regime, no clue is provided about the form it may have taken. These characteristics therefore seems to fit case 2 outlined by Samuel (remote agricultural communities in areas of relatively weak political centralization with no estate system, limited tax obligations, and lineage rather than household kinship-systems). It could also fit case 3, that of pastoral communities which generally follow a lineage-based kinship system

---

[524] Samuel 1993, 115-116.

[525] Ramble 2008, 99. The systems of descent in Te (with a description of the bone and flesh system used in Tibetan societies in general) is in *Ibid*, 112-113. See also Sihlé 2013, 87-89.

We may complicate further the situation by differentiating between a lineage-model and a clan-model of descent. According to Jonathan Samuels,[526] clan-based systems are relatively common among societies residing in the borderlands of traditional Tibet (he gives the example of Nyinba and Sherpa), but there seem to be no attested or well-documented cases of contemporary ethnic Tibetans within traditional Tibetan lands who organize themselves into clans. Although both clan and lineage are descent groups,[527] the clan is defined as "a group or category of people who claim to share descent from a common ancestor but whose more remote genealogical lines are obscure or no longer traceable,"[528] while a lineage is "a line of descent of a group of people who trace descent to a common ancestor through known links."[529] In the case of the rNgog, we are in presence of a lineage-model of organization, not a clan. There is no indication for instance of any specific relation between the rNgog from gZhung and the ones from gSang phu, although they have common ancestors, and the links between the rNgog and their ancestor are clearly traced.[530] Samuels remarks that as the word "clan" is often used without much precision by historians of Tibet not specialized in anthropology, and as anthropologists tend to deduce past situations from their studies of modern communities, the situation is blurred. If we summarize his argument, however, he argues that there may have been in the past in Central Tibet a clan organization which evolved at some time towards the household-system described by Geoffrey Samuel's case 1. The clan-system is still present in Nepal and borderlands, and corresponds to Samuel's case 2.

The rNgog's situation therefore fits neither of these categories. A solution may be offered by Nicolas Sihlé's remark on Aziz's ethnography of Dingri that the "principle of descent is noticeable only among nobles and *ngakpa* tantrists of high socioreligious status."[531] With all these caveats in mind, we can tentatively conclude that the rNgog family followed a patrilinear lineage-based system of descent, but that there seems to be strategies aimed at maintaining the household undivided as long as this is possible, the most common one, from the 13th century onwards, being to have children becoming monks. Another solution seems to be the polyandric marriage, with only one of several brothers officially continuing the family line. This situation is particularly visible in the rGyal tsha line where there are several children at most generations but only one of them continuing the family line. One reason for this may be that alternative lines are dropped from the account, or that there indeed was some attempt to keep the house united, as alluded to with the situation of Ra mo and his brother rDor seng who may have had a wife and children in common, the children inheriting the

---

[526] Samuels 2016, 293-294.

[527] Parkin & Jones, 457: "Descent group: social group formed by the principle of descent (see clan, lineage); Descent: the notion of relationship downward from a common ancestor, often forming a clan or lineage."

[528] *Ibid*., 456.

[529] *Ibid*., 458.

[530] See below part II.2.2. for more details.

[531] Sihlé 2013, 88: "le principe de filiation se manifestant de façon notable seulement parmi les nobles et les tantristes *ngakpa* de haut statut socioreligieux." He remarks later in the same page: « Il convient sans doute d'user de prudence vis-à-vis du schéma évolutionniste suggéré par Lévi-Strauss […] de passage d'un ordre social défini par la parenté et l'alliance à une société stratifiée, organisée par des institutions politiques et économiques, et fondée sur les maisons et les liens du sol. Au Baragaon, la filiation revêt l'importance la plus marquée dans les strates de nobles et de *lamchö* (« prêtres »)."

household and its worldly and religious assets only after rDor seng's death. In the genealogy studied, divisions appear in two cases: when there are two wives, or when two of the children become religious masters in their own right (excepting the case of Ra mo and rDor seng). The polygynic marriage and its dividing (or perhaps multiplying) effect on household is visible in aristocratic families such as the Rlangs lha gzigs described by Olaf Czaja in his study on *Medieval Rule in Tibet*.[532]

Religious capital

After this excursion out of Bourdieu's theory of capital aimed at better understanding the system of descent of the rNgog as it can be approached in religious histories such as the *Rosaries* and the specific form of economic capital that is the house, we will now turn to a second species of capital, cultural capital. Given the religious nature of the texts and of the subject analyzed, and as the field under scrutiny is a "religious field," I will call this capital "religious capital"[533] while retaining the specific characteristics of cultural capital. Bourdieu defines the concept of cultural capital as "a theoretical hypothesis which made it possible to explain the unequal scholastic achievement of children originating from the different social classes by relating academic success […] to the distribution of cultural capital between the classes and the fractions moities."[534] He differentiates between three forms of cultural capital:[535]

- In the *embodied* state, i.e. in the form of long-lasting dispositions of the mind and body;
- In the *objectified* state, in the form of cultural goods (pictures, books, dictionaries, instruments machines, etc.),
- In the *institutionalized* state, titles and diploma.

Embodied

Embodied religious capital is the religious knowledge and know-how that is part of someone's body and mind, having assimilated it either by being exposed to it for a long time or by learning it actively. This form of capital is much valued among Tibetan Buddhists, and traditional teachings insist on the importance of training in ethics, knowledge and meditation (*tshul khrims*, *ting nge 'dzin* and *shes rab*). Great adepts in the religious field are those who spent long years engaging in the practices of study, contemplation and meditation (*thos bsam sgom gsum*) so as to progress on the path towards enlightenment. Despite the emphasis in biographies on natural gifts, on being an incarnation of a deity or of a realized individual of the past, most biographies also insist on the individual's training, on the teachings he received, the years he spent in retreat, etc. In Mi la ras pa's biography by gTsang smyon He ru ka for instance, gTsang smyon insists on the fact that Mi la ras pa is not a "body of

---

[532] Czaja 2013.

[533] This transformation of Bourdieu's cultural capital is suggested in Verter 2003 (spiritual capital)

[534] Bourdieu 1986, 243 (translation of « Les trois états du capital culturel ». *Actes de la recherche en sciences sociales*. Vol. 30, nov. 1979, p. 3).

[535] *Ibid*., 243.

emanation" (*sprul sku*) and that he managed, by his training alone, to reach Buddhahood in one life and one body.[536]

The most important asset in the rNgog family, the one that distinguishes them from other "knowledge providers," is the traditions they received from Mar pa. In the *Rosaries*, which can be read like records of teachings received, one finds many marks of the embodied religious capital of each generation of rNgog religious master. There is for instance in almost each case a sentence to the effect that so-and-so knows something at an early age:

- Jo tshul: "He taught the *Two Segments* in his fifteen year."
- Jo thog: "He taught the Dharma in his twelfth year."
- Ra mo: "In his ninth year, he taught *Vajrapāṇi*."
- Kun dga' rdo rje: "In his sixth year, he could recite *Nāmasaṃgīti* from memory."

Although these formulations may indicate that rNgog children were particularly gifted to be able to teach at a tender age, they actually allude to the very specific upbringing to which they were subjected. All biographies thus start by stating that each child received all the rNgog teachings from his father or uncle, thus completing a "basic education" in the seven maṇḍalas before being allowed to take teachings from other specialists. This, of course, is a great advantage of family lineages, where children can start very early with a specific religious education.

The case of Chos rdor and mDo sde is slightly different. Not much is known about Chos rdor's childhood and upbringing, apart from that he learned rNying ma tantras with a local *dge bshes*. The *Hevajratantra* commentaries and the *Rosaries* both insist on his spontaneous devotion towards Mar pa and his limitless generosity and readiness to obtain his teachings. Hence, in his case, emphasis is put on the way he was able to transubstantiate economic capital into cultural capital by relying one-pointedly on Mar pa. At the end of his life, he is pictured as having come to embody the ultimate religious capital that is mahāmudrā:[537]

> I have the instructions of mahāmudrā which are like a hundred dances led with one pair of reins […]: these are the profound methods that enlighten the sinner in an instant. I will give them to you [Mi la ras pa] with a speech of generosity." He snapped his fingers once, and instantaneously all the small birds' corpses took off and left. […] In his sixty-eighth year, […] he did three circumambulations around the retreat place, and as no one came, he stepped on a boulder […] left a dazzling footprint, and ascended from the mist towards Kecara with the sound of the hand-drum.

mDo sde is said for his part to represent a case that would become widespread in Tibetan Buddhism, the incarnate master. The *Rosaries* explain that a two-hundred year old *ḍākinī* called Jo mo sGre mo recognized him as the rebirth of her master, mKhan po sPug Ye shes

---

[536] Tsangnyön 2010, 166-167.

[537] ST1, 10.

rgyal. This can be considered a sort of embodied religious capital, where the embodiment is not limited to this life.[538] Not taking into consideration the doctrinal background of reincarnation but the fact that reincarnation is for Tibetans a social construction with concrete effect, this sort of capital yielded considerable symbolic capital, especially from the 15th century onward (see below for details). On top of this, mDo sde also studied with Mar pa, his father, his father's disciples, and other masters, and therefore owned a large quantity of embodied religious capital.

This may seem obvious to the reader. What may not be is that, according to Bourdieu, any cultural capital starts to "function as a capital in a certain structure of distribution with regard to a field; if everyone owns this competency, it loses its value and becomes likes writing" [in a literate society].[539] In other words, if everyone owns the same quantity of cultural capital or cultural capital of the same quality, it does not function as a capital. It cannot produce effects in a field, that is to say that it cannot allow its owner to reach a dominant position in the game. This may be why, unlike Chos rdor and especially mDo sde who reached a dominant position in their field because they owned a lot of relevant capital, the other rNgog did not occupy such a powerful position. As members of a religious hereditary lineage, they received a lot of capital that allowed them to be part of the religious field, that is to say to have effects on it. But because most of them did not stand out by obtaining an exceptional quantity of capital, or may have had a lesser mastery on it, they did not reach a dominant position.

Objectified religious capital

Objectified religious capital is religious capital that takes a concrete form, such as writings, manuscripts, libraries, statues, religious objects, relics, temples, and so on. These "cultural goods can be appropriated both materially—which presupposes economic capital—and symbolically—which presupposes cultural capital."[540] Religious goods, temples that house them, and economic capital that buys them played and still play a great role in Tibet for the acquisition of symbolic capital. In the *Rosaries*, however, they are only seldom referred to, far outweighed by the list of the numerous oral transmissions received by each member of the family. Ritual objects, statues and temples are strangely absent from the *Rosaries* although they are likely to have played a large role in the materiality of sPre'u zhing. It is possible that there was a catalogue (*dkar chag*) of sPre'u zhing monastery that has not been conserved and contained such material descriptions. What we know of this materiality is described in Chapter II.5. The objectified religious capital mentioned in the *Rosaries* is the following:

---

[538] See the number 38 of the *Revue d'Etudes Tibétaines*, a special issue on the "Tulku (*sprul sku*) Institution in Tibetan Buddhism."

[539] Bourdieu 2016, 293: "Le langage, le capital ou une compétence culturelle quelle qu'elle soit […] commencent donc à fonctionner comme capital dans une certaine structure de distribution par rapport à un champ; à supposer que tout le monde détienne [cette compétence], elle perdrait toute valeur et deviendrait comme l'écriture."

[540] Bourdieu 1986, 247.

- *Relics and reliquary*: As argued above, Mar pa's relics were considered to bring its legitimacy and power to sPre'u zhing;[541] the relics given by sGre mo and Mar pa's granddaughter to mDo sde and the reliquaries erected with these relics and mDo sde's remains therefore occupy a large part of the narrative.
- *Texts*: the manuscripts entrusted by Chos rdor to his sister for his son are mentioned; the manuscripts on the rNgog cycles carefully copied by Kun dga' rdo rje although he had inherited those of his father; the hundreds of volumes of the *bKa' 'gyur* and *bsTan 'gyur* written in gold and silver commissioned by Rin chen bzang po. Not mentioned but obviously important for an exegetical lineage such as the Mar rngog bka' brgyud were the manuscripts on rNgog traditions that were found in gNas bcu lha khang, and of course the manuscripts of the *Rosaries* themselves.

From this description, we can conclude that the rNgog family owned a substantial amount of objectified religious capital, but not such as to have set them apart from the other religious agents of the period. Goods that may have been especially effective for domination in their field may have been the canon in gold and silver commissioned by Rin chen bzang po (1243-1319), although this practice was becoming widespread in that period.[542] According to the *Rosaries*, it was thanks to Rin chen bzang po's mission to Khams that the seat could be enlarged.

Institutionalized religious capital

In a society like ours, institutionalized cultural capital are the titles and diplomas obtained through the official education system. In decentralized 11th-century Tibet, there was no such official institution guaranteeing the qualifications of agents. An embryo of such organization was created when the Mongols imposed their rule on Central Tibet in the 13th century, and later with Ming and Qing officials who granted many titles to Tibetans, but this influence is not seen on the rNgog accounts. Two kinds of titles are clearly present in them: titles referring to religious masters, such as Lo tsā ba, Bla ma, Rin po che and so on, and titles referring to the status of members of the family line.

The following titles are present in the *Rosaries*:

- *bla ma*: 126 cases in all. The term can be used as a common noun (his lama was so-and-so) or as a title ("Lama so-and-so"). In the family lineage, it refers to the family head, generally the main religious master of a given line at a given time.
- *slob dpon*, "master": 110 cases. The term can be a religious title (3 times for an Indian master, 21 times to refer to teachers of the rNgog). In most cases in the *Rosaries*, it refers to rNgog family members who are not the family head (see below).
- *ston (pa)*, "teacher:" 17 cases, mostly in the 11th century (at Mar pa and Chos rdor's period), though rare cases also appear later.

---

[541] This is true for other religious systems. Bourdieu 2016, 294-295, declares for instance: "Lourdes, c'est le capital religieux objectivé et mesurable en nombre de pèlerins, d'autels, etc. [En développant ce point], on découvrirait des choses très importantes sur le problème de l'accumulation initiale du capital ou sur le pèlerinage comme forme primitive d'accumulation de capital."

[542] See Schaeffer and van der Kuijp 2009, 9-40. Rin chen bzang po's collection is mentioned on pp. 36-38.

- *rin po che*: 16 cases; only from the period of Seng ge sgra onwards (late 13th century).
- *lo tstsha ba*: 13 cases; 8 refer to mDo sde's teachers. Used mainly in the 12th century.
- *mkhan po*, 11 cases and *mkhan chen*, 4 cases, all periods. The term *mkhan po* is used four times for sPug Ye shes rgyal, mDo sde's previous incarnation and six times for the ordination masters of Zul phu (from the time of Rin chen bzang po). One also finds the complementary ordination titles *las slob* (twice) and *gsang ston* (once).
- *mkha' 'gro*: 5 cases, 4 times for Indian gurus, 1 time for Jo mo sgre mo.
- *chos rje*: 4 cases, twice for various Karma pas, once for rGyal tsha bSod nams don grub (15th c.).
- *paṇḍita*: 2 cases, Indian individuals (Nāropa).

We can observe an evolution of the titles used, in time and depending on the narrator. On the one hand, the terms *ston pa* and *lo tsā ba* are mainly used in the 11th and 12th century and indicate a function rather than a status.[543] A *ston pa* was a teacher, generally identified by his family name (rNgog ston, Mes ston), and the same goes with *lo tsā ba* ('Gos Lo tsā ba, Mar pa Lo tsā ba). These functions, non-institutionalized teachers working in an individual basis and translators, free-lance or not, were widespread during the revival of Buddhism in the 11th century, and Lo tsā bas continued to flourish in the following centuries (12th c., and in a more limited scale 13th c.). Logically, these function-titles decreased when teachers became more institutionalized and translators more rare. It must be noted that in later centuries, some scholars ('Gos Lo tsā ba gZhon nu dpal, Khrims khang Lo tsā ba bSod nams rgya mtsho for instance) had the title *lo tsā ba* although they did not particularly make translations. In this case, it is rather a title than a function, but the case does not figure in the *Rosaries*.

On the other hand, the term *rin po che*, "precious one," is a title describing a status rather than a function. It is used to refer to contemporary masters, whether alive or recently deceased. In the *Rosaries* one sees two main uses: it can refer to important masters, generally lineage-holders that the rNgog rely on, or to the rNgog master heading the order at a given time, generally the abbot of sPre'u zhing.

Function titles like *mkhan po* continue as long as the function exists. The function of *mkhan po*, however, depends on the context. In the *Rosaries* for instance, it can either refer to an ordination master, or to Jo mo sgre mo's master, considered mDo sde's previous incarnation. In that case, it may not refer to an ordination master, but the function or status of that individual is not clarified.

Finally, there are titles that seem to be more personalized, such as *chos rje* ("Dharma Lord") twice used for Karma pa, *rje btsun* ("Venerable") that refers here to Mar pa and Mi la ras pa, *mnga' bdag* ("Lord" or "sovereign") for Maitripa, etc. A larger sample would be necessary to draw more definite conclusions on these terms.

---

[543] The term *lo tsā ba* is more honorific than its Tibetan equivalents *skad 'gyur* or *sgra 'gyur* and is more often used than the latter to refer to the Tibetans who were translating Indian (or other) texts that became the canonic *bKa' 'gyur* and *bsTan 'gyur*. Although this title generally indicates a function in the 11th to 13th centuries, it also therefore indicates a prestigious status.

Titles that are used more regularly in the *Rosaries* and that provide information on the social organization of the rNgog lineage are the ones used to refer to family members.[544] In ST1, ST2 and ST3, titles are associated to most of the brothers in the genealogy and when referring to them specifically. The titles used are mostly *bla ma* and *slob dpon*, that I translate as "lama" and "master," except in the last generations, where the titles *mkhan chen* and *chos rje* are used.[545] There is no difference between the titles used in ST3 and ST2, respectively compiled in the 1420s and the 1430s. Just as for the persons included or not in ST1 and ST2 however, there are noticeable differences between ST1 and ST2/ST3 with regards to titles. All titles remain identical until Rin chen bzang po (1243-1319), who is referred as *bla ma* in both versions but additionally called *rin po che* in ST1. Chos kyi rgyal mtshan (1283-1359) too is addressed as *bla ma* in both versions, but also referred to as *rin po che* in ST2. The greatest difference is for Don grub dpal (1331-1398), referred to as *slob dpon* in ST1 but as *bla ma* and *rin po che* in ST2. Similarly, Sangs rgyas yon tan, who is of the same generation, is called *slob dpon* in ST1 but *bla ma* in ST2. As for Rin chen rgyal mtshan, who belonged to Chos kyi rgyal mtshan's generation, he is referred to as *bla ma* in ST1, and his brothers are called *slob dpon*. They are absent in ST2.

From this observation we can deduce that:

- The title *slob dpon* was granted when someone reached a certain age. It is not clear whether this was 20 or 30, but in any case, individuals who are not adults do not have any title. It is possible than someone with no title in ST1 is called *bla ma* in ST2, for example rGyal tsha Kun dga' bzang po because he was a child in 1360 but the head of his family segment in the 1430s.
- The title *bla ma* is only granted once by generation in ST1, except for the last generation where both Rin chen rgyal mtshan and Chos kyi rgyal mtshan are called thus. In ST2, individuals of the rGyal tsha line are referred to as *bla ma* concurrently with the *bla ma*s of the gTsang tsha line, which was not the case in ST1, as are Sangs rgyas yon tan and his son, who also branched from the main gTsang tsha line. In ST2, there can also be several *bla ma*s in the same generation, for example Ras pa and dPal 'byor pa, the brothers of *chos rje* bSod nams don grub. A reason for this may be a general inflation towards granting higher titles in ST2. This tendency may have to do with the increasing politicization of the area and Byang chub dpal's (1360-1446) involvement with several high profile characters of his day. It is possible as well that his time was marked by a higher sense of diplomacy, translated by a more egalitarian bestowal of the title *bla ma* to all lines of the rNgog family.

---

[544] See Appendix 2.

[545] ST2, 31.3-4 (gTsang tsha branch): ***slob dpon*** *legs pa dpal lo/* ***bla ma*** *don grub dpal gyi sras/* ***bla ma*** *byang chub dpal lo/ de la sras 2/* ***dbon po*** *rin chen rdo rje/* ***rin po che*** *bkra shis dpal grub*, and 32.2-3: (rGyal tsha branch): *de la sras lnga byon pa/* ***bla ma*** *ras pa/* ***bla ma*** *dpal 'byor ba/* ***mkhan chen*** *dkon mchog bkra shis/* ***slob dpon*** *dpal ldan bzang po/* ***chos rje*** *bsod nams don grub pa*. These are the contemporary generations of the author, Byang chub dpal. In this case, *dbon po* "uncle," is Byang chub dpal's son; this appelation may refer to the fact that he was non-celibate and in charge of continuing the family line. It is not clear what function is referred to by the terms *mkhan chen* and *chos rje*, perhaps the ones in charge of the monastic life and the religious transmissions.

A last remark concerning status and cultural capital is about the Sanskrit translation of personal names found in ST1. The Sanskrit versions are used in the context of the religious lineage, when referring to the rNgog as authors of texts, and for some of them when listing the year of birth and age at death. The use of Sanskrit in ST1 is probably intended as a marker of cultural capital and aimed at converting it into symbolic capital, in the same way that Latin or Greek can be used in French, and French in English. Whether the use of Sanskrit in ST1 was or not a successful mark of cultural capital when the text was composed in 1360 is not clear. In the 15th century, this was not seen as distinctive anymore, and all names are given only in Tibetan.

Social capital

> Social capital is the aggregate of the actual or potential resources which are linked to possession of a durable network of more or less institutionalized relationships of mutual acquaintance and recognition—or in other words, to membership in a group—which provides each of its members with the backing of the collectivity-owned capital, a 'credential' which entitles them to credit, in the various senses of the word. These relationships may exist only in the practical state, in material and/or symbolic exchanges which help to maintain them. They may also be socially instituted and guaranteed by the application of a common name (the name of a family, a class, or a tribe or of a school, a party, etc.) and by a whole set of instituting acts designed simultaneously to form and inform those who undergo them […]. The volume of the social capital possessed by a given agent thus depends on the size of the network of connections he can effectively mobilize and on the volume of the capital (economic, cultural or symbolic) possessed in his own right by each of those to whom he is connected.[546]

Bourdieu remarks that the notion of social capital is a way to relate to social effects that cannot be reduced to the individual properties of a given agent: these effects, generally recognized as being the action of "relations," are particularly visible in the cases where different people yield unequal outputs from a similar economic or cultural capital.[547] There is at least one good example of this in the rNgog history, that of Byang chub dpal (Section II.4). In the first part of his life, he was not very successful, for political reasons that are not explicit. In 1408, however, he met Tsong kha pa, who spoke very highly of his qualities. After that time, many of the most powerful hierarchs of Central Tibet, and eventually the lord of the then ruling Phag mo gru pa Regime, Grags pa 'byung gnas (1414-1445), became his students, and the rNgog lineage was sought out as representing Mar pa's blessing. This quick turn of

---

[546] Bourdieu 1986, 251.

[547] Bourdieu 1980, 2: "La notion de capital social s'est imposée comme le seul moyen de désigner les principes d'effets sociaux qui, bien qu'on les saisisse clairement au niveau des agents singuliers—où se situe inévitablement l'enquête statistique—ne se laissent pas réduire à l'ensemble des propriétés individuelles possédées par un agent déterminé : ces effets, où la sociologie spontanée reconnaît volontiers l'action des « relations », sont particulièrement visibles dans tous les cas où différents individus obtiennent un rendement très inégal d'un capital (économique ou culturel) à peu près équivalent selon le degré auquel ils peuvent mobiliser par procuration le capital d'un groupe (famille, anciens élèves d'écoles d'« élites », club sélect, noblesse, etc.) plus ou moins constitué comme tel et plus ou moins pourvu de capital ».

events can certainly be related to the meeting with Tsong kha pa, who was himself well introduced in the Phag mo gru pa circles of power and may have been one of the agents responsible for the "symbolic revolution," that occurred during the 15th century.[548]

Genealogy

With regard to the more regular social capital possessed by the rNgog, the first and most obvious is their *genealogy*, be it hereditary or religious. As argued above, the *Rosaries* carefully build the rNgog's legitimacy by showing how great and respectable their ancestors were, who came from heaven and served the Emperor, and how wonderful and realized their religious predecessor Mar pa was, who met Nāropa and brought from India the most powerful tantras of the time. The rNgog built on this capital from the beginning, and if mDo sde indeed gathered Mar pa's relics like we are told, it is certainly in order to transform this social capital into symbolic capital, at a time when Mar pa was not present anymore but when the number of bKa' brgyud pas who claimed to descend from him through Mi la ras pa and sGam po pa was rapidly increasing. The self-consciousness with which mDo sde approaches this heritage is visible in the way he refuses to establish a relationship with Ras chung pa because the latter only speaks of Ti phu pa and not Mi la ras pa, who had been Chos rdor's disciple.

Name

Another important social capital owned collectively by the rNgog is their name, and the name of their lineage, Mar rngog:[549]

> Le nom est donc une de ces propriétés importantes autour desquelles se constitue le capital symbolique, parce que toutes les représentations s'y accrochent; ce n'est pas le nom en lui-même qui est en jeu, mais le nom en tant qu'il est le support de toute une série historique de représentations.

The *Rosaries* start their narrative with the origin of the name rNgog: the first ancestor, rNgog rje Zings po rje, belonged to the rNgog rje subdivision of one of Tibet's four original tribes, the sTong. As seen in part II.2.2., several families in Tibet were called, and still are, called rNgog, but this name nonetheless remains mainly associated with the translators rNgog Legs pa'i shes rab and Blo ldan shes rab and with the rNgog from gZhung. As their specialized

---

[548] See Bourdieu 2016b: in this lessons at the College de France, Bourdieu explains how, according to him, Edouard Manet initiated a symbolic revolution that gave rise to the artistic field and to the various fields of cultural production. Bourdieu 2016a, 13-14: "[…] la révolution symbolique produit les structures à travers lesquelles nous la percevons. Autrement dit, à la façon des grandes révolutions religieuses, une révolution symbolique bouleverse des structures cognitives et parfois, dans une certaine mesure, des structures sociales." *Ibid*, 15 (with reference to Weber): "Une révolution symbolique est une révolution charismatique typique. Comme les religions des grands fondateurs de religions, une révolution charismatique s'impose sous forme de structures mentales et, de ce fait, tend à se routiniser et à banaliser ce qui est perçu à travers ces catégories banalisées, à savoir l'objet même de la banalisation." This topic far exceeds the present work, but it may be a rewarding to study how Tsong kha pa participated in such a change of the mental structures of the period, thus was a "symbolic revolutionary" with long-lasting effects on the Tibetan religious field, as well as on the economic, social, and political states of Tibet.

[549] Bourdieu 2015, 135. See also Bourdieu 1986, "l'illusion biographique,".

fields were quite distinct, the name "rNgog" appearing in biographies, religious histories, records of teachings received, commentaries, etc., is immediately recognizable, and it is likely that even for contemporaries the mere name was an instant reference to a lineage in particular. Thus, the name "rNgog," and even more the appellation "Mar rngog" are a precious social capital that was likely to translate into a variable degree of symbolic capital over the years.

As far as the name of a religious lineage is concerned, monasteries are often held by family lineage, with uncles and nephews succeeding each other as abbots of the monastery, and fathers and children succeeding each other as lord of the estate where the monastery is located. In most cases, the name of the monastery and of the order that developed in that monastery (for example 'Bri gung, Shangs, Dwags po, Phag mo gru, Tshal, 'Brug, sTag lung, Shug gseb, Sa skya, Jo nang, dGa' ldan and so on) are toponyms while the estate lineage is the family name (which can also be the house name). Lineages or orders that have the name of the family they are associated with are not so numerous. Examples that come to mind are Mar pa, rNgog, 'Ba' rom, Khro phu, sMar tshang, Ngor, etc. It may be significant that the terms Mar pa bka' brgyud, Mar rngog bka' brgyud and rNgog pa bka' brgyud all derive from family names. It may be a mark of the importance the rNgog gave to the social capital they owned through their family and Mar pa's, symbolized by this name.

Networks

The rNgog also established a "network of relationships of mutual acquaintance or recognition." The format of the *Rosaries*, a crossover between biography and record of teachings received, and the general diffusion of these two genres of writing provide ample evidence of the importance granted to these social and religious relationship, in Tibet in general and in the rNgog pa lineage in particular. Several types of relationships emerge from these lists of teachers.

Chos rdor had two types of teachers: Mar pa, who made him a holder of higher yoga tantras, and several other masters from whom he received yoga tantras. The capital—social, cultural and symbolic—derived from highest yoga tantras (the latest cycles of tantric practices to have developed in India) was alluded to already; in the 11th century it was outstanding. Although the wide spread of this class of tantra made this kind of capital common in the following centuries, Chos rdor, like Mar pa, owned it early enough to be able to gain a higher position in the field from it. Yoga tantras for their part spearheaded the first spread of Buddhism in Tibet,[550] and experienced a strong revival in the second spread as they represented a link to the Empire for the elite of that period.[551] Both Chos rdor and mDo sde made great efforts to

---

[550] See Weinberger 2010 and Kapstein 2000. Weinberger's argument about the reason for the development of yoga tantras during the Tibetan Empire is summarized as follows: "[Yoga tantras] represented the latest in Indian tantric technology, were adaptable as a royal Vairocana cult, and, in the case of the *Purification of All Bad Transmigrations*, offered a tantric system of funerary rites to compete with the indigenous Bön systems that were a fundamental part of Tibetan religious life."

[551] Weinberger, 156-158, summarized on p. 161: "[Yoga tantras] were seen as conservative in relationship to the violence and sex of later tantric developments and the deployment of such practices during the "dark" period. As such, the tantras of the Yoga class were used to reestablished authentic tantric lineages and "correct" modes of

rely on masters who transmitted the yoga tantras, and were thus part of this conservative elite that sought to appropriate the Empire's greatness, be it through their name, status, or religious practices. Among yoga tantras that became central in the rNgog lineage is of course the *gSang ldan* line of interpretation of the *Nāmasaṃgīti*. The profit gained by possession of the yoga tantras seems to have waned in the following centuries, and later rNgog are not particularly associated with this class of tantras anymore.

mDo sde for his part established relationships with three types of individuals: his father and their disciples, who gave him Mar pa's traditions; translators (eight of them are expressly mentioned), who represented the period's religious elite;[552] and yoga tantra masters, thus continuing his father's conservative trend. In the end of his life, mDo sde is said to organize in gZhung a great religious council gathering "three-hundred-and-sixty-two spiritual friends protected by a parasol."[553] This event, dominated by mDo sde's welcoming of Mar pa's relics into his fief, is a testimony to the considerable social capital he enjoyed in the end of his life.

Later rNgog masters (Ra mo, Kun dga' rdo rje and up to Don grub dpal and Sangs rgyas yon tan) all relied on and attracted numerous masters and disciples, but they did not command the same sort of capital, especially social and consequently symbolic, as Chos rdor and mDo sde. Their network extended into lHo kha and gTsang, along the gTsang po, and far east until Dar rtse mdo, the border between Khams and China. Several missions to Khams were undertaken in successive generations from the time of Kun dga' rdo rje, which translated into considerable economic capital.[554] These travels permitted the rNgog to gather the necessary funds for the building and development of their main monastery, sPre'u zhing. Unlike many orders of the time, however, they did not implant branch monasteries elsewhere than in gZhung and were therefore limited to their familial fief.

Furthermore, the rNgog adapted to their field which became increasingly monastic and scholastic. gZhi brjid grags pa (1190-1269) was the first to be ordained. He took vows with Ba char ba, a disciple of Bya 'dul 'dzin pa brTson 'grus 'bar (ca. 1100-1174). This master was a holder of a *Vinaya* lineage coming from Klu mes and founded Zul phu Monastery, one of the six main seminaries of Central Tibet, located on the eastern bank of the sKyid chu.[555] All monks after gZi brjid grags pa (Rin chen bzang po, Chos kyi rgyal mtshan and Don grub dpal) were ordained in Zul phu, where they also studied the vehicle of characteristics.

Byang chub dpal was the one who fared best in terms of social capital after Chos rdor and mDo sde. The economic situation of sPre'u zhing when he took its head might have been

---

tantric behavior, as again the royal benefactors of Buddhism sought traditions that would promote social stability. This, in conjunction with their continued utility as a royal Vairocana cult and in funerary rites, resulted in Yoga Tantra traditions reaching the zenith of their influence in Tibet during the late tenth and eleventh centuries."

[552] Davidson 2005, 117-160: "Translators as the new Aristocracy."

[553] ST1, 14.

[554] See Hou 2017 and section II.3.2. on the way rNgog lineages penetrated the Tangut Kingdom.

[555] The six seminaries were bDe ba can, gSang phu, Tshal gung thang, dGa' ba gdong, sKyor mo lung and Zul phu. See Sørensen & Hazod 2007, vol. 2: 695-703, and particularly pp. 695-696, n. 5 for reference.

average. The economic state of the rNgog estate itself is difficult to assess in the absence of relevant data, but there was only one monastery with a number of monks that is not likely to have exceeded several dozens. All three forms of cultural capital remained equivalent (this was the main asset transmitted within the hereditary religious lineage), although the progressive adaptation of the rNgog to their society—the new transmissions, the monastic setting, scholastic adaptation, etc.—might have reduced their relative effect on the field. For an unknown reason, Byang chub dpal was disparaged in important circles of power, hence the effect of his social capital was quite low. By establishing the right relationships (Tsong kha pa and his followers, ’Gos Lo tsā ba, several bKa’ brgyud and Sa skya hierarchs, and eventually the Phag mo gru pa lord of Central Tibet, Grags pa ’byung gnas), he managed to gain more social capital and move to a higher position in the religious field, thus firmly reestablishing the rNgog traditions as a visible brand in the tantric offer of the 15th century, the so-called “seven maṇḍalas of the rNgog” (*rngog dkyil bdun*).

In the 15th century, Central Tibet was changing rapidly, politically as well as culturally. One of the important changes was the progressive domination of incarnation lineages, which differ quite radically from the standard master-to-disciple and family lineages. Already in 1968, Gene Smith recognized that “perhaps the most important development in Tibet during the fifteenth and sixteenth centuries was the gradual acceptance of the priority of rebirth lineage over familial claims in the transmission of accumulated religious prestige and wealth.”[556] This assessment has now been strongly substantiated by Gray Tuttle who has compiled data about more than 500 incarnation lines and traced the growth of the institution and its spread throughout Greater Tibet, from the 12th century onwards. He has notably attempted a periodization of major shifts in the rate of recognition and the location of incarnation lines, and identified seven periods. The interesting one for us is the second one, which spans from the 1460s to the 1630s and is “distinguished by a dramatic increase in recognition of new incarnations series, closely associated with the advent of the Geluk tradition.”[557] This trend was further accentuated in A mdo from the 17th century onwards, where there was a great upsurge of new incarnation lines. Despite this evolution, we have no evidence of the rNgog religious masters adapting to this situation. Although Byang chub dpal managed to regain a better position in the field by boosting his social capital, thus yielding better effects from his cultural capital, his system (sPre’u zhing and the rNgog lineage) did not adapt to this new trend, unlike other lineages at the same time. Byang chub dpal was a skilled agent, however, and he did a move that may have been fateful for sPre’u zhing but that participated in saving the rNgog lineage on the long run and is representative of the period: for not explicitly stated reasons, maybe the random advent of a weak successor doubled by Byang chub dpal’s skills in recognizing how to win a better position in the game (in Bourdieu’s terminology, an *habitus* that corresponded to the field), Byang chub dpal chose before his death to transmit some of his most cherished assets outside of his family. Most symbolically, he appointed the second ’Brug chen, Kun dga’ dpal ’byor, to lead his funeral and inherit Nāropa’s ornaments instead of his son, bKra shis dpal grub. Kun dga’ dpal ’byor was the heir of a powerful family

---

[556] Smith 2001, 81, initially published as the introduction to the *Tibetan Chronicle of Padma dkar po* edited by Lokesh Chandra in 1968, p. 1.

[557] Tuttle 2017, 40.

line (the rGya ruling over Rwa lung Monastery) and had just reignited a prestigious incarnation line (that of the ’Brug pa bka’ brgyud hierarch gTsang pa rgya ras): he thus embodied the type of capital valued at the time. After that point, although the rNgog family continued in gZhung for at least a century, its role became marginal. In the 17th century, the abbots of Gong dkar chos sde took over the monastery of sPre’u zhing, and we lose the trace of the rNgog family. Thanks to the efforts of Byang chub dpal, however, the rNgog tradition itself continued, within the ’Brug pa order as well as in other orders where it was introduced by two of his disciples, ’Gos Lo tsā ba and Lo chen bSod nams rgya mtsho, and their disciple, the 4th Zhwa dmar Chos grags ye shes. The 4th Zhwa dmar in particular managed to obtain great proportions of economic, cultural and socials capitals, and thus occupied a dominant position in the religious field of the early 16th century, thus effectively integrating the rNgog traditions in the common market.

Symbolic capital and violence

> Capital ou violence, la chose *symbolique* doit être envisagée comme de l’économique dénié ou comme la matérialité censurée d’un rapport de forces. Ainsi, quand Bourdieu parle de « capital symbolique », de « pouvoir symbolique », voire de « bien symbolique », ce n’est pas pour simplement signifier le contraire de « capital économique », « pouvoir physique » ou « bien matériel ». Le « capital symbolique » est du capital économique converti, le « pouvoir symbolique » peut être physique, le bien « symbolique » est d’abord matériel ; mais leur puissance, leur efficience, leur aura reposent sur une dénégation ou une forclusion collective.[558]

Symbolic capital is not a distinct sort of capital, one that an agent could obtain separately from the other three. It is a degree of accumulated prestige, celebrity or honor founded on knowledge (*connaissance*) and recognition (*reconnaissance*),[559] which itself depends on the possession of economic, cultural and social types of capital adapted to one’s field. The specificity of symbolic capital is to be invisible, to be “euphemized:” it works because those with symbolic capital do not look like they are exerting any kind of “violence” on the dominated, i.e. have the authority to impose their own ways to perceive the social world, to declare what it means and where it should go.[560] Symbolic capital or domination, which could be likened to Weber’s “charisma,”[561] is an important motor in traditional societies; as mentioned above, Bourdieu started to develop this concept, with the more traditional word of

---

[558] Dubois, Durand and Winkin 2013, 10.

[559] See e.g. Bourdieu 1987, 33: « […] les luttes pour la reconnaissance sont une dimension fondamentale de la vie sociale et […] ont pour enjeu l’accumulation d’une forme particulière de capital, l’honneur au sens de réputation, de prestige, et [...] il y a donc une logique spécifique de l’accumulation du capital symbolique, comme capital fondé sur la connaissance et la reconnaissance. »

[560] Bourdieu 2003 [1997], 267-268: « La lutte politique est une lutte cognitive […] pour le pouvoir d’imposer la vision légitime du monde social, ou, plus précisément, pour la reconnaissance, accumulée sous la forme d’un capital symbolique de notoriété et de respectabilité, qui donne autorité pour imposer la connaissance légitime du *sens* du monde social, de sa signification actuelle et de la direction dans laquelle il va et doit aller. »

[561] Bourdieu 2016a, 818: “Ce que je suis en train d’expliciter sous le nom de capital symbolique, c’est ce que Weber appelait “charisme” […], cette sorte de grâce, dans tous les sens du terme, qui accompagne le pouvoir.”

"honor," in his Kabyle studies, especially "The sense of honour" and "The Kabyle house or the world reversed."[562]

In the religious field of a traditional society like Tibet, symbolic capital is accrued from all capitals presented earlier. The species of capital described are the ones relevant for the rNgog lineage, but other agents will favor different sorts of capital and thus occupy various positions in the field. As far as the rNgog are concerned, the analysis shows that their economic capital was average. They may have belonged to a rural elite that could afford some sort of autarchic living but never gained the economic power of the 'Khon family in Sa skya, for instance. Although the lamas travelled in gTsang, dBus and Khams, establishing relationships with many monasteries and patrons and thus funding the building of sPre'u zhing, the order did not extend beyond the gZhung valley. The symbolic capital of the rNgog was therefore based on a solid religious capital, especially developed by rNgog mDo sde. The specific capital that distinguished the rNgog from other agents is their embodied knowledge of tantric exegesis, objectified in Mar pa's relics and the general appropriation of Mar pa's own symbolic capital they represent. This religious capital fared differently in terms of symbolic power depending on the types of relations established by the various individuals, and the distinction of their religious capital. I argue that the rNgog were the most "powerful" or "successful" when they were who they really were: holders of Mar pa's teachings and of the yoga tantras, especially *Nāmasaṃgīti*. Then only could they shape the field; the council organized by mDo sde is an example of that. When they adapted to their world, by studying the path of characteristics or building a monastery for instance, they did not shape the field but were shaped by it. In these circumstances, they managed to keep on the legacy but with only a limited growth. The last individual who to some extent managed to have visible and long-lasting effects was Byang chub dpal. He too, however, was shaped by others' capital. One sees many lineages, especially family ones, dying off at that period. Byang chub dpal's lineage survived, but not its hereditary line. Because the *Rosaries* stop at this time (and this is not surprising), I did not in the present chapter reach further: from other sources, however, we know that the rNgog's religious capital continued to be transmitted in gZhung for four generations after Byang chub dpal. A few decades after his death, in the late 1460s, a master from the rGyal tsha line, bSod nams don grub, gave transmissions to the founder of Gong dkar chos sde, the new powerful monastery of the region founded by the Yar rgyab heir, Kun dga' rnam rgyal (1432-1496). Two generations later, Kun dga' grol mchog (1507-1565), an eclectic master and abbot of Jo nang Monastery, receives the seven maṇḍalas from Blo gros dpal bzang of the gTsang tsha line, and Tshar chen bLo gsal rgya mtsho (1502-1566/7), founder of the Tshar branch of the Sa skya order, received Dud sol ma from bSod nams bstan 'dzin of the rGyal tsha line, in Thar pa gling, a new seat in the gZhung valley. Although both of these rNgog figure in later lineages (of the KGND and DL5), they were no more than local lamas with a prestigious religious capital but little actual power. The reason for this dying of the lineage may be the "symbolic revolution" that happened in the 15th century and that changed the species of capital having effects in the religious field, and more generally the political world of Central Tibet.

---

[562] Bourdieu 1972 (2000), « Le sens de l'honneur », « La maison ou le monde renversé ».

II. PART TWO: A Lineage in Time

CHAPTER ONE: Religious Ancestors

In part I are presented the textual, religious, and conceptual material that underlie the Mar rNgog history as it is told in part II. The present part is the history of that complete lineage. It encompasses a very large period, from the nebulous origin of the bKa' brgyud lineage in India in the 10th century and the mythic past of the rNgog family in the 5th until the ruined stūpas and new walls of sPre'u zhing as it now stands, passing through Mar pa, his disciples, and especially Chos rdor and his family. As presented above, the sources are mainly textual primary and secondary Tibetan historiographies of various kinds, especially biographies, religious histories and records of teachings received, as well as the secondary literature on related subjects. The common theme and underlying thread of this history are the *Rosaries*, two related rNgog historiographies written between 1360 and the 1430s. Because they are the primary and most detailed source of information on the rNgog lineage, each chapter and section of the present work starts with an extensive quote of the relevant part of the *Rosaries*. The page number in the first edition of ST1 and ST2 is indicated,[563] and the reader is referred to the critical edition appended in the end of this work for the Tibetan version. This translation is followed by a critical appraisal and a comparison with other sources. The aim is to gather all available data in order to assess what we know as completely as possible and trace the network of each person, with all his masters and disciples.

Chapter II.1 is a study of the rNgog's religious ancestors, chiefly Mar pa and his Indian masters. Although the life of these Indian masters is not explicitly addressed in the *Rosaries*, the life of Tilopa and Nāropa is repeatedly described in the *Hevajra* commentaries of the rNgog tradition, and it is manifest that for the rNgog the stories of their distant Indian gurus occupied an important place in their representations. Another reason for exceeding the call of the *Rosaries* is that the Indian past of the bKa' brgyud lineage, although it figures prominently in many traditional presentations, is actually quite blurry. Secondary sources on the subject may abound, they remain patchy. It could be argued that this work, relying exclusively on Tibetan sources, is ill-equiped to assess Indian history. It must be remarked, however, that what we know about these Indian masters comes from Tibetan sources, and can therefore be considered, to some extent, Tibetan history on Indian soil. The later section of chapter II.1 is a presentation of Mar pa's five main disciples. This again is not detailed in the *Rosaries*, but it is in most religious histories. All in all, the aim of this first chapter is to root the rNgog lineage in its wider context, that of a nascent religious movement that burgeoned into many sub-branches, and to continue the research presented in my study of Mar pa's biographical tradition (Ducher 2017, first concluded in 2011). As regards the latter, I remarked in the introduction that further study was needed to clarify the identity and the lineage of Mar pa's direct disciples.[564] The life and legacy of Mi la ras pa is well-known, but that of Mar pa's

---

[563] *Bod kyi lo rgyus rnam thar*, vol. 22 (*za*), pp. 1-50.

[564] Ducher 2017, 14, n. 6.

other disciples is not. Furthermore, the present dissertation is further based on the *rNgog slob brgyud dang bcas pa'i gsung 'bum*, that contains several commentaries associated with Mar pa's other disciples mTshur ston and Mes ston. The material needed for a history of the early Mar pa bKa' brgyud school is therefore available, and this is what is presented in the present chapter.

1.1. The life of Mar pa Chos kyi blo gros

As is clear in the *Rosaries*, the rNgog pa bka' brgyud lineage starts with Mar pa, and it is his transmission that the family's first spiritual representative, rNgog Chos rdor, inherited, and that made up the core of their "ancestral teachings" (*pha chos*). As argued in Chapter I.3, the rNgog used several means to appear as Mar pa's legitimate heirs and benefit from his symbolic capital. This is particularly obvious in the *Rosaries*, which fuse the life-story of Mar pa and that of the rNgog in order to make the two almost indistinguishable. Thus, because Mar pa is an integral part of the historiography of the rNgog lineage, it is important to start Part II, which is the history of that lineage, with an account of Mar pa's life. As argued in my study of Mar pa's biographical tradition however, there are many diverging versions of Mar pa's life that prevent us from solidly ascertaining some of the important events of his life. In order to proceed further, I therefore first summarize this biographical tradition and then present Mar pa's life according to the biographies composed within the rNgog pa bka' brgyud lineage. In this way, it is not *the* truth that I intend to present here, in the sense of historical, evidence-based data, but *a* truth, filtered through the lens of the rNgog family. When taking into account the versatility of the hagiographical genre and its *de facto* subjectivity, this may be as valuable as trying to choose between versions that have been differing since the outset.

1.1.1. Mar pa's biographical tradition

Mar pa's biographical tradition can be traced back to three major and three minor sources. All of these as well as later works are presented in detail in *Building a Tradition: The Lives of Mar-pa the Translator*, so I summarize here only the three main ones and focus on the rNgog tradition to give a short account of Mar pa's life. It is likely that his first biography was composed by one of Mi la ras pa's disciple, Ngam rdzong ston pa Byang chub rgyal po (11-12th c.).[565] According to him, Mar pa spent some years in India prior to his meeting of Nāropa, and the narrative is therefore less focused on the Indian paṇḍita than most of the other works. It contains several graphic descriptions of Mar pa's esoteric encounters with his other teachers Jñānagarbha and Śantibhadra, and is in large parts inspired by Mar pa's songs. The second major work is rNgog mDo sde's (1078-1154), summed up below. The third one, which is arguably the most influential text in the tradition, can be attributed to Mar ston Tshul khrims 'byung gnas, one of the three main disciples of Khyung tshang pa, Ras chung pa's foremost student. This biography was expounded orally within the Aural Transmission (*sNyan brgyud*) until Tshul khrims 'byung gnas taught it to his disciples, who put it in writing together with

[565] The biography is conserved in the "Sgra bsgyur mar pa lo tstsha'i rnam par thar pa (nga)." In *dKar brgyud gser phreng: A Golden Rosary of Lives of Eminent Gurus*. Leh: Sonam W. Tashigang, 1970, pp. 83-103. (W30123). A diplomatic edition and translation is provided in Ducher 2017.

his commentaries; the version we have therefore dates from the late 12th century, and was partially based on mDo sde's account. This version hinges upon Mar pa's relationship with Nāropa and presents in some detail his activity in Tibet. The place of Mar pa's songs is significantly reduced. It influenced the later tradition to a large extent and was the foundational narrative inspiring gTsang smyon He ru ka's 1505 masterpiece on Mar pa's life.[566]

Although Ngam rdzong ston pa's and Mar ston Tshul khrims 'byung gnas's works figure prominently in Mar pa's biographical tradition and are said by gTsang smyon to be his two main sources, several texts mention the rNgog family's works on Mar pa as reliable sources. The *lHo rong chos 'byung* for instance states that it mainly follows "rNgog's tradition" for Mar pa's life story.[567] gTsug lag phreng ba mentions two main works of that tradition when referring to Mar pa's place and date of birth: the *Lo rgyus the tshom gsal byed* by Zhe sdang rdo rje, i.e. rNgog mDo sde, and the *rNam thar rim bzhi* by "rNgog pa."[568] I argue that the former is the version now preserved in the *'Bri gung bka' brgyud chos mdzod chen mo*.[569] The latter is the *rNam thar rim bzhi pa* by rNgog Rin chen bzang po (1231-1307) referred to in the *Rosaries* and the *lHo rong chos 'byung* but that remains unavailable. This biography may be quite detailed as the *Rosaries* refer the reader to a long hagiography of Mar pa when they stop midway in their narrative of his life. Kaḥ thog Si tu also mentions that text, as well as the *Lo rgyus rin chen spungs pa* by rNgog Byang chub dpal ba, probably ST2.[570] There are yet two other biographies of Mar pa composed within the rNgog lineage in the first volume of the *lHo brag mar pa lo tsa'i gsung 'bum* (MPSB). The first, unsigned, is called *Summary of the qualities of Lama Mar pa from lHo brag* and is a sketch of mDo sde's work.[571] The second is signed rNgog gZhung pa Chos kyi rdo rje and is supposedly "the extraordinary Dharma story of Master Mar pa."[572] It did not play a large role in the tradition and generally differs from what other biographies present as rNgog Chos rdor's biography of Mar pa.

The most influential of these accounts is the one attributed to rNgog mDo sde, who met Mar pa in his infancy. This text is found in the first of two volumes of *Mar pa'i bka' 'bum* published within the DK-DZO.[573] Although Mar pa's biography is devoid of a signature, its colophon compares it to "a precious lamp which dispels doubts," thus linking it with the "the history called *Dispelling Doubts* by Zhe sdang rdo rje" mentioned by the second dPa' bo.[574]

---

[566] Tsangnyön 1982 for a translation.

[567] *lHo rong chos 'byung*, 50: *phal cher lo rgyus 'di ni rngog lugs kyi rjes su 'brang ba yin*.

[568] Dpa' bo II, 4.

[569] Ducher 2017, 59-61.

[570] Kaḥ thog Rig 'dzin Tshe dbang nor bu, 3: 640.

[571] MPSB, 1: 1-11: *bla ma mar pa lho brag pa'i yon tan mdor bsdus pa.*

[572] MPSB, 1: 11-27: *bla ma mar pa chos kyi lo rgyus thun mong ma yin pa yin*.

[573] It is translated in Ducher 2017, 275-294.

[574] DK-DZO, 5: 188: ***the tsom sel byed*** *rin cen sgron me lta bu'o*. Dpa'-bo II, 4: *lo rgyus the tshom sel byed bya ba zhe sdang rdo rje dang mi bskyod rdo rje'i sbyar byang yod pa gnyis dang ngam rdzong lugs gnyis sogs rnam thar drug bdun las de las lo gnyis kyis snga ba'i me bya la 'khrungs nas gya bgryad cu'am don brgyad bzhugs par 'chad.*

Much of the content and structure of this text point to a very early date of composition, thus mDo sde could indeed be its author and have composed it in the first half of the 12th century.

1.1.2. Mar pa's life according to the rNgog family's accounts

Mar pa's ancestors and offspring

In chapters II.1 to II.3, I quote the narrative of the *Rosaries* related to the part under scrutiny, using ST1 as a base with the additions from ST2. In both texts, there is a substantial number of notes written in smaller character that generally specify or clarify the meaning of the phrase where they are appended. In the translation, these notes are indicated by parentheses that should be understood to run with the flow of the narrative, although they sometimes make it uneasy. My additions meant to clarify the meaning are indicated between brackets. A critical edition of the Tibetan version, with the same system of parentheses is provided in Appendix 1. In that version, words in italics indicate text present only in ST1, and words in bold text that only figures in ST2.

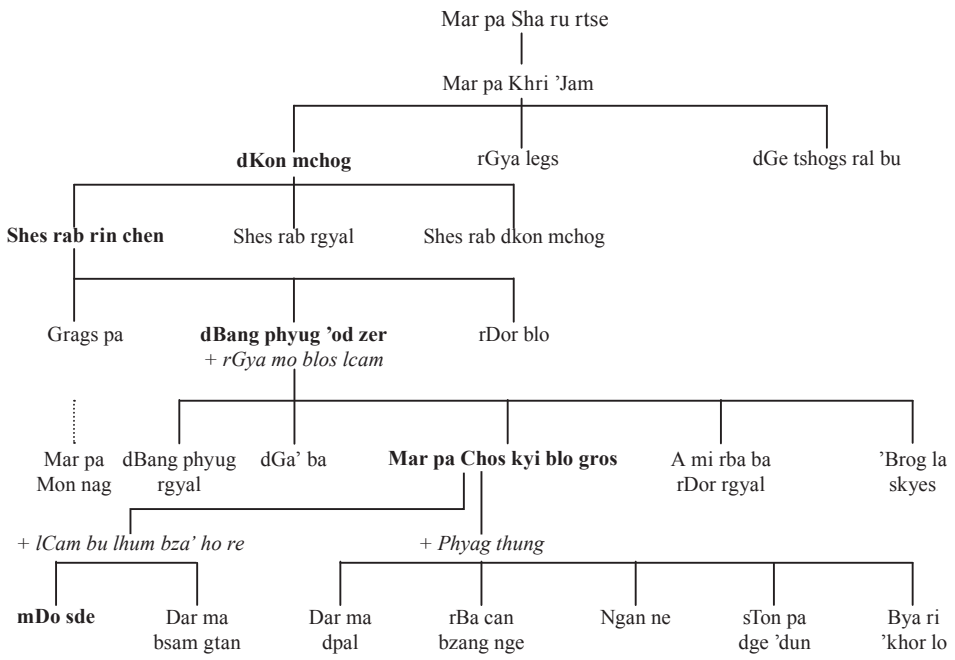

Plate 10: Mar pa's ancestors as described in ST1

The section of Mar pa's ancestors opens the *Rosaries*:[575]

> As for the Venerable Mar pa: in the Mar Valley, one called Mar pa Sha ru rtse, of Mar pa ancestry, had a son called Mar pa Khri 'jam. He had three sons, dKon mchog, rGya legs and dGe tshogs ral bu. dKon mchog had three sons: Shes rab rin chen, Shes rab rgyal and Shes rab dkon mchog. Shes rab rin chen had three

[575] ST1, 2.1-2.5; ST2, 26.2-26.6.

sons: Grags pa (whose son was called Mar pa Mon nag), dBang phyug ’od zer ([Mar pa]’s father; his mother was called rGya mo blos lcam), and rDor blo. dBang phyug ’od zer had five sons: dBang phyug rgyal, dGa’ ba, the Venerable Mar pa (the middle son), A mi rba ba rdor rgyal et ’Brog la skyes. A mi rDor rgyal’s lineage went down to Mar pa Me la skyabs.[576]
The Venerable Mar pa had two sons with his wife lCam bu lHum bza’ ho re (Yum bDag med ma): mDo sde and Dar ma bsam gtan (also called bSam gtan dpal). mDo sde, having gone to a party (for his uncle’s wedding), died falling off a horse. His wife Phyag thung ma had five sons: Dar ma dpal, rBa can zang nge, Ngan ne, sTon pa dGe ’dun, and Bya rid ’khor lo. Apart from Ja rid ’khor lo, the Venerable did not have any descendant (as his sons died before [him]) (from any of his two wives).

The name of Mar pa’s grand ancestor, Mar pa Sha ru rtse, only appears in the *Rosaries*, and its source, as the rest of the genealogical tree, is likely to be Rin chen bzang po’s work. A similarly complex tree, with many correspondences with that of the *Rosaries*, is provided in a rosary of the Rwa lung bKa’ brgyud tradition in which Mar pa’s biography was composed by Sangs rgyas ’bum, gTsang pa rgya ras’s (1161-1211) disciple, and thus slightly prior to Rin chen bzang po.[577] Given the overall differences between this and the *Rosaries*, it seems likely that the latter are based on Rin chen bzang po’s work, which itself used Sangs rgyas ’bum’s data.[578]

In rNgog mDo sde’s biography, Mar pa’s grandfather is said to be called Phyug po dKon mchog, the “rich dKon mchog,” which is here referred to as Mar pa’s great grand-father. Both texts agree on the name of Mar pa’s father being dBang phyug ’od zer. This is the name accepted by most later biographies, except a few, which give Mar pa dKon mchog as Mar pa’s father, as did the Aural Transmission biography of Tshul khrims ’byung gnas.

The name of Mar pa’s mother is a bit more contended. She is called “rGya mo blos [<blo gros?>]” in the *Rosaries*, but “rGya mo ’od de” in rNgog mDo sde’s work. “rGya mo ’od de,” sometimes transformed as “rGya mo ’od zer,” is the name most commonly accepted in later biographies, although one also finds the name “sKal ldan skyid.” The latter does not appear in any of the early texts but seems to originate with the *bKa’ brgyud rin po che’i chos ’byung*

---

[576] This sentence is quite unclear. In ST2, one finds the name “Mar pa mes skyabs,” and in ST3 “Mar pa me skyabs.” It may be the name of rDor rgyal’s son and heir, but nothing more is known about him or his father.

[577] Ducher 2017, 94-97.

[578] “sKyes mchog mar pa lo tsa’i rnam thar dri med mthong ba don ldan.” In *Rwa lung dkar brgyud gser phreng [Brief lives of the successive masters in the transmission lineage of the Bar ’Brug-pa Dkar-brgyud-pa of Rwa-luṅ*]. Palampur: Sungrab Nyamso Gyunphel Parkhang, Tibetan Craft Community, 1975. 4 vols. (Mar pa: vol. 1, 138-165). The reference on Mar pa’s ancestors is in vol. 1, 139, and that on Mar pa’s offspring and wives is on pp. 163-164.

mig ’byed ’od stong by *sPyan snga* bSod rnams rgyal mtshan dpal bzang po (1386-1434);[579] it nonetheless acquired some following as it was adopted in the *lHo rong chos ’byung*.

The name of Mar pa’s wife in the *Rosaries* is quite noteworthy. His first wife, and the mother of Mar pa’s foremost son, Darma mDo sde, is called “lCam bu lHum bza’ Ho re.”[580] Although she is elsewhere almost universally referred to as bDag med ma, it is likely that “Ho re” is her common name and bDag med ma the name she received from Mar pa when she was empowered into the *Hevajra*’s maṇḍala. The biography attributed to rNgog Chos rdor also mentions “Jo mo sNye mo bzang nge” as an alternative name;[581] he is followed in that by a 13th-century biography by rGyal thang pa bDe chen rdo rje, who calls her “Ma cig jo mo bzang nge.”[582] Sangs rgyas ’bum calls her “Hor dge ma.”[583] She is completely ignored in rNgog mDo sde’s biography, and does not play a real role until quite late in the tradition, with first rGyal thang pa (late 13th c.), and later the second Zhwa dmar mKha’ spyod dbang po (1350-1405) the *lHo rong chos ’byung*.

Mar pa’s second wife is called “Phyag thung” by the *Rosaries* and Tsam phyag thung by Sangs rgyas ’bum.[584] The only thing that is known about her is that she had five sons. Although some of them had children (named by Sangs rgyas ’bum), none maintained Mar pa’s transmission. Among them, only the last one, Bya ri ’khor lo, rose to some (dis)repute as the one who sold away Mar pa’s remains.[585]

The only son of Mar pa that was worth his spiritual attainments was his firstborn, Mar pa mDo sde. As stated in the *Rosaries*, he died falling off a horse returning from a party for his uncle’s wedding and was thus prevented from realizing and transmitting Mar pa’s heritage. This responsibility was shouldered by the rNgog: the name of mDo sde was given to Chos rdor’s son, and rNgog mDo sde later gathered Mar pa’s relics. Thus, according to the *Rosaries*, the family of Mar pa and that of the rNgog became one.

Mar pa’s place of origin

> It is said that Mar pa was born in Western sGang, in a [place] called bDag mo’i ling, in sPe sar.[586]

ST1 states that Mar pa was born at bDag mo’i ling, in sPe sar and ST2 that it was “dPe’ sar mo ling.” mDo sde says it was dPe gsar, in Chung khyer, in the lHo brag valley. Both texts in

---

[579] Sørensen 2007, 62; Ducher 2017, 122-123.

[580] *lcam bu* means “wife and son,” and the words *lhum bza’* mean “uterus” and “wife.” These names are therefore titles and not the name of Mar pa’s wife. If her name, “Ho re” or “Hor dge ma,” is significant she may be of Mongol origin.

[581] MPSB, 1: 24.

[582] GLNT, 173.

[583] Rwa lung Rosary, 154.

[584] *Ibid.*, 154.

[585] See section II.3.2. and Ducher 2016a.

[586] ST1, 2.4; ST2, 26.

the *Mar pa'i gsung 'bum* agree it was in lHo brag, with Chos rdor adding that it was more precisely Chus khyer in the south, in mKhyen lung mgon pa. The second dPa' bo, gTsug lag phreng ba, whose seat was in Gro bo lung, Mar pa's homeland, quotes "rNgog" in his description of Mar pa's ancestry, and describes it in much the same ways as the *Rosaries*. His description of Mar pa's place of birth, however, is more precise. He states:[587]

> [Mar pa's] was born in the navel of the Tibetan land of snow, in the higher lHo brag, within the g.Yo ru–one of the four horns of dBus and gTsang. The place was called dKon mchog stod kyi bKra shis ling [and was located] in the snowy valley of sPe sar. Although it is well-known that he was born in Chu khyer, this comes from the fact that what was formerly known as "the nine horns of Chu khyer" then became "sPe sar."

Mar pa's youth and first exposure to the Dharma

> It is said that Mar pa was born in Western sGang, in a [place] called bDag mo'i ling, in sPe sar. When his body was still young, his mind was fierce. (His parents thought that he would at one point meet with some dispute, and they wondered whether it was possible that he would develop intellectually if they sent him study.) When a plowman came and was mowing in the middle of a field (where the grass grows), he was guiding well and the ox stumbled in front of the master. He threw a stone at the ox but it hit the head of the plowman, who died. ("Ah, I do not belong to mankind!) [thought Mar pa] with great sorrow. I must go to the Dharma!" (When he wondered where to go), he thought he would go to Khams. As the Khams pa were coming to dBus (to study), he thought he would go to dBus. As the dBus pa were going to gTsang, he brought the best provisions (a black horse, some silk of great value, a teak saddle and an ancient [piece of] turquoise) and went to (Myu gu lung) at Mang dkar dril chen in La stod, where he met lama 'Brog mi Lo tsā ba and mGos Lo tsā ba. As the two were sparing with teachings, the Venerable listened to the commentary [called] Pradīpoddyotana from mGos. He did various writings on the Pradīpoddyotana, and came to know it with an explanation of the tantra. The venerable master then thought: [3] "(Instead of enduring such hardships in Tibet), he ['Brog mi] went to Nepal; I too should go to India!" (Having learned languages), he told 'Brog mi: "As I am going to Nepal, may I request from you the *Hevajra* translation you made? Could you also make a gtor ma [ritual]?" ['Brog mi] assented, (and offered a gtor ma in the evening). He told [Mar pa] "When you leave tomorrow, there is a Newar called Pham 'thing pa: go to him!"

---

[587] Dpa' bo II, 3: *de yang sku bltams pa'i gnas ni bod gangs can gyi lte ba dbus gtsang gi ru bzhi las g.yo ru'i rgyud lho brag nang ma'i stod gangs lung spe sar dkon mchog stod kyi bkra shis ling nga zhes bya ba'o/ chu khyer du 'khrungs par grags kyang sngon chu khyer ru dgu zhes pa la spe sar 'dren pa'i dbang du byas pa'o.*

> Then, [Mar pa] traveled to the Nepal Valley. He requested *Catuṣpīṭha* from the Newar sPyi ther ba (who told him that there was no one but the knower of all four Pīṭha, the Mahapandita Nāropa, who had that Pīṭha that he was requesting from him).
> Then, he went to Pharphing, where he requested teachings (on Kriya cycles) from a disciple of master Nāropa, the master Pen dha ba. [Mar pa] gave four measures of gold as offerings. This rejoiced the master, who assented when [Mar pa] asked him to go to India. As the master knew one elder and two venerables from Vikramaśīla, he sent him [there]. At that time, there was simultaneously four great paṇḍitas: Ratnākaraśānti in the east (he was a cittamatrin), Vāgīśvarakīrti in the south (he was directly blessed by Tāra), Prajñākaragupta in the west (who was said to be learned in grammar and logic), and the pandit Nāropa in the north (who was said to have gained mastery in the cycles of the uncommon vehicle). According to the Sa skya pa, there are six gate-scholars: on top of these four, they add the brahman Ratnavajra, and the abbot Jñanaśrimitra. (Having gone to Pulahari), he requested Nāropa's teaching, and so on: there are many stories. These are clarified in detail in the hagiography.

The *Rosaries*, as all other biographies of Mar pa, say that as a youth Mar pa was quite fierce and that his parents sent him away to study Dharma, hoping that he would not be completely spoiled. Most texts also recognize that Mar pa's first experience in the Dharma was with 'Brog mi Lo tsā ba, who brought to Tibet what became the Sa skya tradition of *Hevajra*. Their encounter is said to have taken place at 'Brog mi's Myu gu lung hermitage, located in the Mang mkhar valley, in the western part of gTsang.[588] Mar pa met 'Brog mi when the latter was just back from his travels in India and Nepal. As the translator was demanding much fees, Mar pa did not receive many transmissions from him. Although most biographies insist on this alone, however, the *Rosaries* allude to 'Brog mi's help to Mar pa in several ways: he taught him Sanskrit, shared with him his translation of the *Hevajratantra*, and made pujas for him, assumedly to ensure his future success in Nepal and India. 'Brog mi also advised Mar pa on which master he should visit in Nepal. All in all, one can consider that Mar pa's stay at 'Brog mi's hermitage was a fruitful one given that he had gone there as a violent youth that his parents had hoped to send away.

According to the *Rosaries*, at 'Brog mi's hermitage, Mar pa met "mGos," i.e. 'Gos Khug pa lHas brtsas, and studied with him Candrakīrti's commentary on the *Guhyasamājatantra*, the *Pradīpoddyotananāmaṭīkā*.[589] It is quite unlikely, however, that Mar pa received any transmission from 'Gos, at that time or any other, as the two are not recorded anywhere to have had a relationship and as they went to India at approximately the same time. The

---

[588] See Stearns 2001, 83-93, and Davidson 2005, 161-178, for an account of 'Brog mi's life. See Akester 2016, 599-601, for a description of My gu lung.

[589] Tōh 1745; Tibetan translation by 'Gos.

confusion of the *Rosaries* probably comes from the fact that ’Gos, like Mar pa, was known as an unhappy student of ’Brog mi.[590]

All the rNgog biographies except the one by rNgog Chos rdor state that after leaving ’Brog mi, Mar pa went to the Katmandu Valley in Nepal,[591] where he met sPyi ther pa, the “Bold One.” From him, Mar pa mainly received the transmission of *Catuṣpīṭha*. Mar pa also met Pen dha pa (= Paiṇḍapa), Nāropa’s disciple. The two seem to have become close friends, and Paiṇḍapa is a recurring figure in Mar pa’s life, helping him at several stages. Mar pa gave him some gold and went to Vikramaṣīla, where Nāropa's had been one of the four gates' scholar. He then went to Nāropa's hermitage in Pullahari, and the training started.

Mar pa’s training in India

The *Rosaries* stop their account of Mar pa’s life at this point, refering the reader to the longer biography, probably the *rNam thar rim bzhi pa* by Rin chen bzang po. The following account is therefore based on mDo sde’s version and on the two rNgog narratives from the *Mar pa’s gsung ’bum*, with references to the Aural Transmission biography to fill in some gaps in mDo sde’s version.

mDo sde states that Mar pa stayed six years with Nāropa and received many transmissions. He also visited other masters, such as Maitripa and Jñānagarbha. It was an intense period for Mar pa, who received many transmissions and met some of the most famous masters of the time. Mar pa then headed for Tibet, where he spent a few years gathering gold. Although his stay is not very detailed in mDo sde’s account, the Aural Transmission’s version depicts how he was not very successful when returning to lHo brag.[592] After some time, he met rNgog Chos rdor and toured Northern Tibet, where he found gold in a mine and was offered some wealth. He then met Mar pa mGo yags who became his lifelong sponsor and disciple. After a few years, having dreamt of *ḍākinī*s who unraveled for him the meaning of a cryptic verse previously sung by Nāropa, Mar pa felt compelled to go back to India to further his formation. On the way, he met Atiśa. According to Nag tsho Lo tsā ba’s account, the event may have occurred around 1045-1046.[593]

According to mDo sde, it was at that point that Mar pa met gNyos Lo tsā ba. As no further detail is offered and as the subject is elided in the other two rNgog works, it is difficult to form a clear opinion, but it seems difficult to believe that the meeting took place so late in Mar pa’s life, as gNyos is said to be 39 years his senior in the gNyos clan’s historiography.[594]

---

[590] See Stearns 2001, 93.

[591] The word used in the *Rosaries* is *lho bal*, which refers to the country Nepal in a general sense, while *bal yul* refers to the Nepal Valley, i.e. the actual Kathmandu valley. The term *bal po* points to the inhabitants of the Valley, the Newars (See Lo Bue 1997, pp. 630-631).

[592] KSTC, 164-170.

[593] See the translation of a letter of the Sa skya hierarch Grags pa rgyal mtshan relating Nag tsho’s account in Davidson 2005, 145, and a critic of that letter and its exploitation by Davidson in Ducher 2017, 218-226.

[594] The account from the gNyos family states that gNyos went to India at 56, when Mar pa was 17, and that he was accompanied by about twenty young people.

Most other accounts state that Mar pa met gNyos when he first went to India, and that the loss of texts occurred in the end of the first journey, thus justifying the second one to India. There are two ways to account for the difference: one could be to edit mDo sde's account on the basis of the Aural Transmission's one, which bears close resemblance with the gNyos clan's account of the meeting, and consider that Mar pa met gNyos in Tibet upon embarking on his first journey to Nepal. They separated there as gNyos did not rely on sPyi ther pa and later met occasionally in India, until their paths definitely parted in the end of the first journey because their relationship had grown sour.[595] Another would be to take into account another major divergence between the Aural Transmission biography and most other texts, i.e. the question of the number of journeys Mar pa made to India. In his songs and consequently in most biographies, Mar pa says he went to India three times. The Aural Transmission biography, however, describes only two journeys. In the end of the first one, Mar pa loses his texts. He then gathers a large amount of gold in Tibet in order to go again. In this case, Mar pa can only meet gNyos during the first travel and travel alone during the second one, when the quest for Nāropa takes place. mDo sde nonetheless describes three journeys, which may account for the difference in the time of the meeting with gNyos. During the first journey (during which Mar pa is said to remain six years with Nāropa), Mar pa met many masters, and Nāropa is teaching normally. At the beginning of the second journey, Mar pa meets Atiśa at the frontier, and joins gNyos on his way to India. When Mar pa reaches India, he is told that Nāropa is engaging into tantric practice, and must therefore rely on other masters as Nāropa does not give formal teachings. Mar pa meets him nonetheless and receives a few transmissions. If one is to believe Nag tsho's just mentioned narrative of the meeting with Atiśa, Nāropa was considered dead at the time, an event called "practice" in Mar pa's biographies. This expression refers to a time when yogins refrain from normal relationship and can therefore be considered dead to the world at large.[596] At the end of the second journey, Mar pa lost his texts because of gNyos. The two of them then parted for good: gNyos remained in Tibet to spread the transmissions he received in India and Mar pa returned shortly to Tibet before going on with the third journey, the most esoteric one, centered on Mar pa's quest for Nāropa and the many visions he has of him. This version is backed by the introduction to the *Six Doctrines of Sras mkhar ma*.[597] In it, there is an autobiographical account by Mar pa in which he describes a first return to Tibet during which he toured the North and gathered gold at Nam ra's goldmine. After that, he journeyed again to India, made offerings to his masters and received instructions. He returned a second time to Tibet with gNyos 'byung po, but the latter told him that there were great obstacles to his coming back to Tibet. Ḍākinīs told him the same and flew him in a palanquin to Oddiyāna, where he found "the mind quintessence from Puṣpahari's Nāropa." Although this version is quite different

[595] See Ducher 2017, 226-236, for more detail on the various versions of the relationship between Mar pa and gNyos.

[596] See Wedemeyer 2013 on the meaning of that technical word of tantric practice and Ducher 2017, 213-216, for a discussion of that term in the framework of Mar pa's life.

[597] See Ducher 2016a for a detailed presentation of that text and its various versions. It contains fifteen scrolls of the innermost teaching Mar pa brought back from India, together with an introduction said to be autobiographical.

from anything found in the biographies, it has the merit of shedding a different light on Mar pa's relationship with gNyos, one that fits the account by mDo sde[598].

Whatever be the case, during his last voyage through India, Mar pa questioned his gurus on his possible meeting with Nāropa and prayed with them. The description of their dream prophecies of Mar pa's meeting with Nāropa is very detailed in mDo sde's version and it is likely that this is the source of all later depictions of this acme in Mar pa's spiritual life. After meeting and praying with his masters, Mar pa went on a solitary quest for Nāropa and had several visions of him. Finally, after many hardships, Nāropa appeared. Mar pa was ecstatic and offered a maṇḍala of gold to him, but Nāropa refused. Mar pa insisted and Nāropa finally relented but scattered the hard-won gold in the air. Mar pa was taken aback and Nāropa rematerialized it, transforming the whole place in a land of gold. Nāropa was still not teaching, however, and Mar pa carried on attending his other masters. He also continued to have wonderful visions of Nāropa. Finally, Mar pa and Nāropa went together to Pulahari. They were attacked on the way by wrathful *ḍākinī*s. Unable to dispel the obstruction, Nāropa prayed to Tilopā, and innumerable wrathful emanations of Tilopa filled the sky and tamed the ḍākinīs. Then, for seven months, Mar pa received instructions from Nāropa in secret in Pulahari. After predicting that Mar pa's family lineage would disappear like a sky-flower but that his religious lineage would be uninterrupted like the flow of a river and that his disciples would go to Khecara for thirteen generations, Nāropa "entered the practice" for good, and Mar pa went back to Tibet. He made many prayers with his Newar masters and was welcome at the Tibetan border (in Mang yul) by Mar pa mGo yags.

The final installation in Tibet

Not much detail is provided in the rNgog accounts about Mar pa's life after he settled in Tibet. mDo sde cites several verses attributed to Mar pa and describes how he entered several times into another's body, a practice which became one of the main tropes of Mar pa's biographies. His settlement and activity is much more detailed in the Aural Transmission account that describes how Mar pa was greeted by his family and disciples and how his fame attracted many disciples. According to rNgog Chos rdor's version, it was at that time that Mar pa married and got his children.

Dates

To definitely settle the matter of Mar pa's dates of birth and death may never be possible as none of the biographies agree on the subject and no outside information can help us ascertain which possibility is correct.[599] Andrew Quintman studied the similar puzzle presented by Mi la ras pa's dating and concluded that Tibetan biographers and historians, on the basis of widely diverging primary sources, eventually formulated three main traditions: 1028-1111, 1040-1123 and 1052-1135.[600] Most bKa' brgyud biographers chose the early tradition; the

---

[598] *Phyag chen rgya gzhung*, 105-108.

[599] See Ducher 2017, 301-306, for a detailed presentation of the matter.

[600] See Quintman 2015, in particular his conclusion on pp. 13-14.

lHo rong chos 'byung and *Deb ther sngon po* preferred the middle one (followed by most Western scholars); and the late tradition was introduced by the *Mig byed 'od stong* and adopted by gTsang smyon He ru ka. The dates of birth and death of Mar pa can pretty much be classified in a similar fashion: 1000-1081; 1012-1097 and 1024-1107.

Most later sources, starting with the *lHo rong chos 'byung*, and then Dpa' bo and 'Be lo, justified their favoring of an early date by relying on what they call the "Rngog tradition," and especially the *Rnam thar rim bzhi pa* by rNgog Rin chen bzang po, presently unavailable but presumably the source of the *Rosaries*. ST2 states:[601]

> When [rNgog mDo sde] reached his eighth year, the Venerable Mar pa (as a bird-year native) passed away at 89, (on the 14th day of the hare month of an **ox year**)(on the day of the bird).

The date of Mar pa's death is quite precise: it was an ox year, when mDo sde was eight. As mDo sde is said to be born in 1078 (by the *lHo rong chos 'byung*) or 1090 (by the *Deb sngon*), this can either be 1085 or 1097. The hare month is the second one in the calendar, so the 14th day of that month would be either 10 March 1085 or 02 March 1097.[602] If he was in his 89th year at that time, then he may be born in 996 or 1008.[603]

The *Rosaries* never provide the year elements of early characters, unlike the *lHo rong chos 'byung* and the *Deb ther sngon po*. As argued above, in almost all cases, the *lHo rong chos 'byung's* dates seem preferable. Thus, in relative chronology, choosing early dates for Chos rdor and mDo sde implies to choose early dates for Mar pa, who is supposed to die when mDo sde is in his 8th year. This is why the *lHo rong chos 'byung* considers that Mar pa was born in 997 (choosing a life-span of 88 years rather 89) and died in 1085.[604] That same text later allows some leeway, stating that the birth dates could be postponed by two to five years,[605] and justifies its choice by the accounts founds in biographies and songs.[606] Thus, if we choose to follow the rNgog accounts and the *lHo rong chos 'byung*, which is what most later bKa' brgyud historians did, we can consider that Mar pa was born at the turn of the millennium (between 997 and 1002), and died in 1085, or 1081 if we give credit to the bird year claimed in early biographies.

---

[601] ST2, 36 (and also ST1, 11).

[602] According to the Phugpa Calendar Calculator: http://www.digitaltibetan.org/cgi-bin/phugpa.pl.

[603] According to Dpa' bo II, 4, "89" is a mistaken reading of the *rNam thar rim bzhi pa*, which has 86. Accordingly, he favors the years 1000-1085.

[604] *lHo rong chos 'byung*, 31.

[605] *lHo rong chos 'byung*, 49.

[606] *lHo rong chos 'byung*, 50: "That Mar pa was forty when he last returned to Tibet and that he died when mDo sde was eight is clear in both biographies and songs."

Chart 2: Summarizing chart of the dates of birth and death of Mar pa

	Year of birth	Year of death	Age
rNgog mDo sde	[Horse] [994/1006/1018]	Bird [1081/1093/1105]	88
rNgog Chos rdor	[Tiger] [= 1002/1014]	Bird	80
ST1	[Bird] [997/1009]	Ox, when mDo sde was 8 [1085/1097]	89
ST2	Bird	Ox	89

2. Mar pa's masters

Mar pa is said to have met many gurus in Nepal and India, and here too sources diverge considerably. Available texts from the rNgog family are not the most loquacious on the subject but may prove helpful to sum things up. The *lHo rong chos 'byung* states:[607]

> In general, he had in India one hundred and eight gurus, first among them Singhalingpa.[608] There were fifty exegetical tradition holders, and thirteen who were definite changers of appearance. In particular, there were four noble gurus– Nāro, Maitri, Śāntibhadra […] and Jñānagarbha […]. Among them all, two were unrivalled: Nāro and Maitri.

The first two numbers–the highly symbolical numbers 108 and 50–are another way to state that Mar pa had many unknown masters: there were many wandering yogis (108) but also many learned masters (50). The number thirteen is ubiquitous in the tradition and comes from two of Mar pa's songs. As Mar pa did not elaborate in his song, no consensus is reached on their exact identity and the ones in the group of thirteen often overlap with the four or five main gurus.[609] Thus, although it is clear that Mar pa met numerous masters during his twenty or so years in India, some struck more than others, and the "four noble gurus" mentioned in mDo sde's account and the ḍākinī will be described below. Among them, the most important ones are Nāropa and Maitripa.

1.2.1. Nāropa and the origins of the bKa' brgyud lineage

Nāropa's life as described in rNgog accounts

Despite getting a status equal to that of Maitripa in the above quotation, Nāropa occupies a central place in Mar pa's biographies and is the one generally included in the lineages before Mar pa. In the *Rosaries*, the rNgog lineages tracing to Mar pa are also tied to Nāropa, and

---

[607] *lHo rong chos 'byung*, 32.

[608] His name is spelled *seng ge gling pa* in the *lHo rong chos 'byung*. In mDo sde's text (170), he is mentioned as one of several greater and lesser *kusali* (wandering renunciates) and his name is spelled *sing gha gling pa*, thus referring to a Sinhalese yogi, whose name did not reach us.

[609] This designation refers to the fact that these masters' spiritual influence is such that the disciple generates a perception based on primordial wisdom in the place of perceptions coming from habitual tendencies (mKhen po Chos grags bstan 'phel, private interview, 26.07.2006). Texts were the thirteen are listed are the *Deb dmar*, 74, and the biographies by gTsang smyon He ru ka, Kun dga' rin chen and gTsug lag phreng ba.

none of his other master, apart from Śāntibhadra for *Mahāmāyā*, is mentioned.[610] The Indian *siddha*'s predominance may partially explain why his role in Mar pa's life has sometimes been contended,[611] even though his importance in Mar pa's biographies is unquestionable. A detailed account of the way Nāropa's life was narrated goes beyond the present project, but a brief summary of his biography within the rNgog tradition and a presentation of his spiritual ancestry is an integral part of the present project, as the Mar rngog bka' brgyud lineages cannot be envisioned independently from Nāropa and the transmissions he inherited from Tilopa.

The life of Nāropa has been written and rewritten many times, in much the same way as Mar pa's or Mi la ras pa's life.[612] His biography by gTsang smyon's disciple, lHa btsun Rin chen rnam rgyal (1473-1557), was translated by Herbert Guenther in *The Life and Teaching of Nāropa*.[613] In it, Guenther states that Nāropa was born in 1016, but since then it has been recognized that this was a sexagenary cycle late, and that he may rather have been born in 956 (fire dragon) and have died in 1040 (iron dragon).[614] It is of course difficult to give much credit to Nāropa's date of birth given the mist in which his life is shrouded and the many hagiographical layers laid upon it, but his date of death is quite definite thanks to Nag tsho's account of Atiśa's arrival in Tibet with some of Nāropa's relics, which were enshrined in a stūpa in Atiśa's sNye thang sgrol ma lha khang.[615] As far as his place of birth is concerned, Sarah Harding, who studied several lives of Nāropa for her *Niguma: Lady of Illusion*, argued convincingly that Nāropa was born in Kashmir, in the west of India, as Niguma's brother.[616]

The following is summarized according to the version of Nāropa's life story published in the same volume as rNgog mDo sde's life of Mar pa.[617] It bears no signature but, as most of the rest of the volume, it may come from a rNgog background. As a youth, Nāropa studied with many paṇḍitas. He was married by his parents to a woman called Vimala (*dri ma med pa*) but did not stay with her. He became a monk and his monastic career was so successful that he was installed as one of the gate-keepers of the Nālandā university and universally recognized as a great scholar. Once he was teaching, an ugly woman came to challenge his knowledge, told him she could lead him to her brother, and disappeared (p. 133-134). Nāropa then left Nālandā and went on a quest for his master, Tilopa. He faced a long ordeal, which became one of the most widespread tropes of the bKa' brgyud lineage. Nāropa's hardships started on an outer level, and went progressively towards an inner, secret and finally essential level. First, it took him twelve minor hardships (*bka' phran bcu gnyis*, p. 137-141) to meet Tilopa. He then experienced inner difficulties to receive Tilopa's guidance on the path of maturation

---

[610] ST1, 7.

[611] See Davidson 2005, 141-148, for the digging up of a debate that started in the 12th century and Ducher 2017, 218-226, for an analysis of the matter.

[612] For the biographies of Mi la ras pa, see Roberts 2007, Tiso 2010, Quintman 2013 (revised versions of their PhD dissertations respectively published in 2000, 1989 and 2006).

[613] Guenther 1986.

[614] Wylie 1984, Harding 2010.

[615] See Ducher 2017, 224-225, for details and sources.

[616] Harding 2010, 1-6.

[617] "rJe btsun nā ro pa chen po'i rnam thar." In DK-DZO, 5: 130-159.

(*smin lam*, pp. 143-144) until the fourth empowerment, and twelve major hardships (*dka' ba chen po bcu gnyis*) to progress on the path of liberation (*grol lam*, pp. 144-150). Then, at a secret level, he lit the blissful and then immaculate lamps, thus completing his hardships and actualizing the *mahāmudrā* (pp. 150-151). There was finally an essential (*de kho na nyid*) ordeal, during which, by tantric practice (*caryā*), he perfected his training (pp. 151-154). Then, he actualized the fruit, and obtained the prophecy of his enlightenment by his guru. Most of this biography is interspersed with songs and verses by Tilopa and Nāropa, and it is followed by several *doha*s.

The trope of Nāropa's hardship is a very widespread and ancient one, as evidenced by the "History of the Twelve Hardships of the Glorious Nāropa" included in the DK-DZO, which may have been written very early within the rNgog lineage. The colophon reads:[618]

> At the end of the twelve hardships, [Tilopa] gave [Nāropa] the instructions. Lama Mar pa stayed twelve years in Nāropa's presence and underwent similar difficulties. After he offered gold *maṇḍala*s again and again, [Nāropa] gave him these instructions. It is after rNgog Chos rdor surrendered [his wealth] three times to Lama Mar pa that he received these instructions.

Nāropa's spiritual ancestry: the "Four Current" (*bka' babs bzhi*)

By undergoing hardships, Nāropa matured on the path and became able to receive Tilopa's instructions. These teachings on the highest yoga tantras' phases of creation and perfection descend from four lineages of instructions (*bka' babs bzhi*) that are a central theme in the bKa' brgyud lineage historiography. When, for instance, the 16th Karma pa was asked for the essence of the bKa' brgyud lineage on the American TV in 1976,[619] he answered that "what was bKa' brgyud was the teaching given to Tilopa and then Nāropa by the four lineages of transmission" (*bka' babs bzhi ldan gyi chos*). The term bKa' brgyud is sometimes said to derive from the term *bka' [babs bzhi'i] brgyud [pa]*. Despite the ubiquitous insistence on the bKa' brgyud pas' Indian roots in the four lineages of transmission, there seems to exist as many versions of the four as there are texts describing them, and they function much better as a trope than as a historical device, which they probably were never intended to be.

Tilopa's biographies are not the subject of the present work. A proper study of each of them may reveal which were the first ones composed, but even this would not place us much closer to the "truth" of Tilopa's life, nor help us know with certainty who his four masters were, what exactly he received from them, and who were the gurus making up their lineage. As these facts are even further remote in time and space than those in Mar pa's life, anything we can state about them is by necessity reduced to a vision from a specific angle. With that in mind, I summarize findings in secondary sources on the subject, then compare several primary sources by relying mainly on one coming from the rNgog milieu, and finally envision the *bka' babs bzhi* as a meaningful trope in the elaboration of a nascent bKa' brgyud identity.

---

[618] "dPal nā ro pa'i dka' ba bcu gnyis kyi lo rgyus." In DK-DZO, 6: 151-158.

[619] See the interview on http://vimeo.com/78320699, accessed on 2014/03/23.

Most Tibetan and Western scholars of the religious history of the second spread of Buddhism in Tibet were faced with the discrepant versions of the four lineages transmissions. In the West, there has been several studies of Tilopa's life, which often skirted the problem.[620] Fabrizio Torricelli, whose main interest was Tilopa and his teachings, tried more specifically to compare the various versions of the four lineages given in the *Ṣaḍdharmopadeśa* (*chos drug gi man ngag*) and in some of Tilopa's biographies.[621] He summarized his findings about Tilopa's four masters as follows:[622]

Chart 3: Tilopa's human masters

	chos drug gi man ngag	BCZP, Mon rtse pa	Don-mo-ri-pa	gTsang smyon & disciples	Kun dga' rin chen
gtum mo	Cāryapa	Sukkhasiddhī	Cāryapa	Cāryapa	Sukkhasiddhī
sgyu lus	Nāgārjuna	Nāgārjuna	Nāgārjuna	Nāgārjuna	Cāryapa
rmi lam	Lavapa	Cāryapa		Cāryapa	
'od gsal	Nāgārjuna	Lavapa	Nāgārjuna	Lavapa	Lavapa
bar do	Sukkhasiddhī		Sukkhasiddhī	Sukkhasiddhī	
'pho ba	Sukkhasiddhī		Sukkhasiddhī	Sukkhasiddhī	Nāgārjuna

This chart shows that Tilopa had four human masters: Cāryapa, Nāgārjuna, Lavapa and "Sukkhasiddhī." Except for the *ḍākinī* identified as Sukkhasiddhī, who is often referred to as Kalpabhadrī (*skal pa bzang mo*), these four are the ones generally recognized as Tilopa's human masters. Tilopa is said to have stated in a verse:[623]

> I have human masters:
> They are Nāgārjuna, Cāryapa, Lavapa
> And Kalpabhadrī.

The trouble arises when one tries to ascertain what transmission Tilopa received from whom, and who were the previous masters in each of the lineages. Torricelli tried to resolve the inconsistencies by comparing all available versions of the life of Tilopa, but this did not help as contradiction was present from the outset. Although he misattributed one of Tilopa's lives (here called BCZP) to Mar pa when it was in fact compiled in the 15th century by Byang chub bzang po,[624] the various versions remain irreconcilable. How, therefore, can we explain these differences?

---

[620] Torricelli & Naga 1995, Nālandā 2007

[621] Torricelli 1993b and Torricelli 1998.

[622] Torricelli 1993b, 197. I adapted the chart to my own terminology and give the names of the transmissions in Tibetan rather than Sanskrit as this is the language I am working with and in which they are described. For the biographies compared by Torricelli, see Torricelli 1993b and Torricelli & Naga 1995, viii-xi.

[623] DK-DZO, 5: 13: *nga la mi yi bla ma yod/ /klu grub tsar ya la ba pa/ /skal ba bzang mo nga yi ni.*

[624] See bibliography for details and Ducher 2017, 70-72, for a description of the authorship of this biography.

First, it must be recognized that there are several levels of transmissions. The four lineages only refer to the outer level: it is during the first part of his life that Tilopa met these masters, before he put their instructions into practice during a long retreat and met with Vajradhara, who gave him the transmissions again. In actuality, although he was taught the "six doctrines" and the corresponding tantras from human masters, he did not trully receive them at the time, as this happened only when he actualized the empowerment. This is why Tilopa can state without contradicting himself:[625]

> I do not have any human master,
> My guru is omniscience.

This actual transmission is considered ultimate reality. In *The Four Lineages of Transmissions and Tilopa's Hagiography*,[626] it is called the "lineage of realization and blessing" (*rtogs pa byin brlabs kyi brgyud pa*). In other texts, this is also called the "proximate lineage" (*nye brgyud*), referring to the fact that Tilopa received his transmission straight from the enlightened mind. Hence, when the origins of the bKa' brgyud lineage are described, there is generally no detail about the four transmissions; it reads:

Vajradhara → Tilopa → Nāropa → Mar pa, etc.

Therefore, a first way to explain the discrepancies between the various versions of the *bka' babs bzhi* is to consider them as relative reality, that is to say as a first, necessary but incomplete, step towards the actualization of ultimate reality.

A second way to understand them is hinted to in *The Four Lineages of Transmissions and Tilopa's Hagiography*[627] that presents the second mode of transmission as being the "lineage of transmission and experience" (*bka' babs nyams kyi brgyud pa*). In these lineages of human masters, the texts distinguish between two traditions:

1. the tradition of the transmission of the individual tantras and key-instructions (*rgyud dang man ngag so so'i bka' babs lugs*);
2. the tradition that blends the key-instructions of the four transmissions into the compilation of "merging and transference" (*bka' babs bzhi'i man ngag bsre 'pho 'tshams sbyor du dril ba'i lugs*).

In gTsang smyon He ru ka's disciple dBang phyug rgyal mtshan's *Life of Tilopa*,[628] there is a similar distinction between a "non-combined line of transmission" (*thun mongs ma yin pa'i bka' babs*) and a "combined line of transmission" (*thun mongs kyi bka' babs*). The term *thun mongs ma yin pa*, sometimes erroneously translated as "extraordinary," is more aptly understood as "non-common" or "non-combined," that is to say referring to the fact that each teaching is transmitted individually.

---

[625] See e.g. DK-DZO, 5: 9-10: *nga la mi yi bla ma med/ nga yi bla ma thams cad mkhyen.*

[626] DK-DZO, 5: 9 (*Guhyasamāja*).

[627] "bKa' babs bzhi dang tai lo pa'i rnam thar." In DK-DZO, 5: 9-10.

[628] See references in Torricelli 1993b, 194-196.

Distinguishing between these two traditions means that there are not one but two sets of four transmissions. Within that framework, Tilopa's four masters described in the chart above are the final recipients of the non-combined transmissions. Tilopa's four masters of the **combined transmissions** are listed in the DK-DZO (for instance) together with their lineage and the corresponding teachings:[629]

- Transmission line of the *Pañcakrama* and entering another's body: Vajradhara → Ratnamati →Nāgārjuna → **Mātaṅgī**.
- Transmission line of the mahāmudrā and so on: Vajradhara →Vajrapāṇi →Saraha →Lūipa → **Ḍeṅgipa**.
- Transmission line of inner heat and so on: Sumati Samantabhadrī → Thang lo pa → **Karṇaripa**.
- Transmission line of luminosity, illusory body and so on: Ḍombi Heruka → Bināpa → Lavapa → **Indrabhūti** the Lesser.

These four are also mentioned in rGyal thang pa's biography of Tilopa although he does not distinguish between the combined and non-combined traditions:[630]

> For the joy of other beings,
> Ḍeṅgipa, Karṇaripa,
> Mātaṅgī and Lavapa:
> Praise to the one who relied on gurus from the four transmissions!

dBang phyug rgyal mtshan gives a similar account of the four, while adding further gurus in the transmissions.[631] Mon rtse pa, Gling ras pa, dPa' bo gtsug lag phreng ba and others also give this list.[632]

The four masters from **the four non-combined lines of transmissions** are the four most universally recognized, although their lineages are often not detailed.[633] The DK-DZO's text gives the following list:[634]

---

[629] DK-DZO, 5: 11.

[630] Torricelli 1993b, 189-190.

[631] Torricelli 1993b, 196. He adds Dārikapa as Ḍeṅgipa's master and Thang lo pa as Shing lo pa's.

[632] Torricelli 1993b, 192-193, for Mon rtse pa. The same account is provided by Gling ras pa's *Grub thob bka' bzhi'i lo rgyus*, see e.g. *'Brug lugs chos mdzod chen mo*, vol. 47, 2-6. dPa' bo gtsug lag phreng ba's list (*mKhas pa'i dga' ston*, 740) is approximately the same, but he adds directions to each of the lineages: Mātaṅgī is from the East, Karṇaripa from the North, Indrabhūti from the West and Ḍeṅgipa from the South. It must be noted that according to dPa' bo, Tilopa's master in the southern line is Sukhadhari rather than Ḍeṅgipa. Exactly the same account is given by the third Karma pa (as quoted by Kong sprul in the *Shes bya mdzod*, vol. 1, 526-527), but with different directions (Mātaṅgī from the South, Karṇaripa from the East, Indrabhūti from the West and Ḍeṅgipa from the North).

[633] Kun dga' rin chen is the only one to detail the lines, see Torricelli 1993b, 196-197. As he likely was the editor of the DK-DZO (see section I.1.4.2), his source is likely to be the "bKa' babs bzhi dang tai lo pa'i rnam thar" (DK-DZO, 5: 1-45).

[634] DK-DZO, 5; 10-11.

- Transmission of the *mahāyogatantra* (*pha rgyud*) of *Guhyasamāja* with its cycles of the *Pañcakrama*, and of the *Catuṣpīṭhatantra* with its instructions on transference (*'pho ba*), entering another's body, and so on: Vajradhara → Indrabhūti the Great → Nāgayoginī (*klu las gyur pa'i rnal 'byor ma*) → King Viśukalpa (*bhi su kalpa*) → Saraha the Great → Nāgārjuna → **Mātaṅgī** → Tilopa.
- Transmission of the *Mahāmāyātantra* with its [instructions on] the three yogas of forms, on the three illusions and so on: Vajradhara → Jñānaḍākinī → Kukūripa → **Cāryapa** → Tilopa.
- Transmission of the six doctrines that rely on the infinity of *mahāyoga* and *yoginītantras*: Vajradhara → Vajrapāṇi → ḌombīHeruka → Bināpavajra → **Lavapa** → Tilopa.
- Transmission of the six doctrines that rely on the *Hevajratantra*: Vajradhara → Vajrapāṇi → Anaṅgavajra (*yan lag med pa'i rdo rje*) → Padmavajra → **Ḍākinī Kalpabhadrī** → Tilopa.

The name given to the combined tradition, the "tradition that blends the key-instructions of the four transmissions into the compilation of merging and transference," and especially the expression "merging and transference" (*bsre 'pho*) relate that presentation to the rNgog tradition as this is the name given to the six doctrines in that lineage. Significantly, the text distinguishes in the non-combined traditions between the six doctrines deriving from the *mahāyoga* and *yoginītantras* in general, and the six deriving from the *Hevajratantra* in particular. A similar presentation is given in a text written by an unnamed disciple of rNgog mDo sde.[635]

The above chart given by Torricelli–which must be understood as a summary of Tilopa's four masters in the non-combined transmissions–gives a different account of the teachings transmitted in each line. The transmissions are as follows, with dBang phyug rgyal mtshan's list as an example:[636]

- The first line of transmission, that of inner heat and dream, was given by Cāryapa.
- The second, that of illusory body and the *mahāyogatantras*, was given by Nāgārjuna.
- The third, that of luminosity and non-dual tantras, was given by Lavapa.
- The fourth, that of the *yoginītantras*, transference and the intermediate state, was given by Sumati Samantabhadrī.

To summarize, although it is certain that there are several irreconcilable versions, it is possible to make sense of this mass of data on the basis of the different traditions of the *bka' babs bzhi* alluded to in *The Four Lineages of Transmissions and Tilopa's Hagiography*. To begin with, it is necessary to distinguish between two levels:

- the lineage of realization and blessing;
- the lineage of transmission and experience.

---

[635] "Zhal gdams bka' bzhi lo rgyus dang bcas pa bsre 'pho lag len du dril ba zab pa," In DK-DZO, 6: 59-60. See also *Lho brag mar pa lo tsā'i gsung 'bum*, 5: 150-151.

[636] Torricelli 1993b, 195. For variations in other texts, see the above chart.

In the first, the proximate lineage (*nye brgyud*), Tilopa receives teaching directly from enlightenment, "omniscience," under the guise of Vajradhara, without the intercession of human masters. In the second, the "long lineage" (*ring brgyud*), there are four lines of transmissions, the *bka' babs bzhi*. Descriptions of the four can be related to two traditions, sometimes called "combined" and "non-combined" (*thun mong/thun mong ma yin pa*). When Tilopa speaks of his four human gurus as Nāgārjuna, Cāryapa, Lavapa and Kalpabhadrī, this refers to the four recipients of the four non-combined transmissions. Their own lineage is sometimes detailed, but mostly not. It is likely that this tradition descends from Tilopa's *Ṣaḍdharmopadeśa* (*chos drug gi man ngag*).

In the combined tradition, for which a single source has not been identified, Tilopa's masters are Mātaṅgī, Karṇaripa, Indrabhūti and Ḍeṅgipa.[637] The line ending with Mātaṅgī in this set can be equated to the one of Nāgārjuna in the previous set, and the line of Indrabhūti the Lesser corresponds to that of Lavapa, as Mātaṅgī and Indrabhūti are disciples of respectively Nāgārjuna and Lavapa. The two other lines differ in the two sets. Hence, if one takes into account all the lines of transmission referred to in the two traditions, one ends up with six distinct lines of transmission. This is what 'Be lo Tshe dbang kun khyab alludes to in his conclusion of the *Rosary of Crystal Gems*, when he refers to "the history of the four or six great lines of transmission."[638] Despite this ordering of traditions, there remains some variations; gurus are included in some texts and not in others. These are likely to be diachronic, individual changes made by the many authors who composed hagiographies on their Indian predecessors.

From the above, we understand that the term "four lines of transmission" covers a large and indefinite number of Indian gurus who practiced and transmitted tantric teachings that became the core of Mar pa's legacy in Tibet. These "four" lineages can be counted as six, sometimes seven, or more.[639] There must therefore be reasons for the tradition to remember the number four. A hint to that is the fact that the four lines of the combined tradition are sometimes associated with the four directions of India.[640] The number four and the association with the four cardinal directions suggest that this is a symbolic rather than descriptive, let alone historic, presentation of the origins of the teaching, one that was paradigmatic in India and

---

[637] The line ending with Mātaṅgī in this set can be related to the one of Nāgārjuna in the previous set, and the line of Indrabhūti the Lesser to that of Lavapa, as Mātaṅgī and Indrabhūti are their respective disciples (direct or indirect in the case of Mātaṅgī and Nāgārjuna). The other two lines are too different in the two sets to be equated.

[638] *Rosary of Crystal Gems*, 1: 45: *de ltar bka' babs chen po bzhi'am drug gi lo rgyus* […]. One must note that the presentation in this text is quite peculiar. 'Be lo mentions six lines of transmission (*mahāmudrā*, Inner Heat, Luminosity, *karmamūdra*, and two lineages of tantrix exegesis) that indeed correspond to the four in the combined tradition plus two from the non-combined one, but shuffling many masters. His aim is to provide a short account of the life of all of the Indian masters at the origin of the bKa' brgyud lineage rather than describe the four lineages themselves. Hence, all masters are described without much concern for the lineages per se, and some which are not mentioned elsewhere within the four lines are included.

[639] See for instance Tāranātha & Templeman 1983.

[640] Kong sprul (SByD, 1: 526-527) states that Rang byung rdo rje associates the four with cardinal directions. This can also be found in the *mKhas pa'i dga' ston* (1: 240).

consequently in Tibet.[641] The representation of a central character (here Tilopa) surrounded by four masters is reminiscent of the presentation of the *maṇḍala*, i.e. a deity depicted in his or her palace with four doors at the four directions. Stating that Tilopa received four lines of transmissions amounts to presenting him in a *maṇḍala*, hence deifying him. The *maṇḍala* is the world of the deity. Hence, if Tilopa is at the centre of a *maṇḍala*, it means that his transmission is complete, an impression reinforced by the fact that he actually acknowledges that his guru is omniscience. Relatively, his teaching is complete as it comes from all major Indian gurus, and ultimately it is valid as he realized it, or, in other words, received it from enlightenment itself.

The number four is recurrent in the early Mar pa bKa' brgyud tradition. There is for example one song, very influential on Mar pa's biographies, in which Mar pa describes himself as the recipient of the four lineages of India, with Jñānagarbha's lineage in the West, Śāntibhadra's in the South, Maitrīpā's in the East and Nāropa's in the North.[642] In the *History of the Mahasiddhas' Four Transmissions*, Gling ras pa describes the lives of all masters from the four lines, and then goes on with the lives on Tilopa, Nāropa and their disciples:[643] Nāropa is said to have "four heart sons: the Indians Manamaśrī and Kanakaśrī, the Newar Pham mthing pa and the Tibetan Mar pa lHo brag pa." This highly subjective list should of course remind us that Nāropa's disciples are described from a Tibetan perspective. Mar pa's "four sons that rejoiced him" (*mnyes pa'i bu bzhi*), also known as the "four pillars," are also well-known (see below).

This multiplication of quadruple transmissions, evocative of the *maṇḍala* structure of tantric Buddhism, points to the symbolic role of these presentations. Although it was crucial in Indian Buddhism to have one's lineage going back to the Buddha (or his equivalent, Vajradhara or the central deity of a tantra), Indians did not focus on listing the individuals making up this lineage as much as Tibetans did. Although one finds a few Indian documents detailing members of specific lineages,[644] Indians seem to have given more attention to the fact that there is a lineage, with one's guru, and one's guru's guru, etc.,[645] without mentioning specific names. For Tibetans, precise identification was paramount, as shown by the *bKa' babs bzhi* example. This may be explained by the need for Tibetans to prove back home the legitimacy of their transmission, and as much as possible, its completeness and prestige. Faced with that need of precision and the absence of such in their sources, discrepancy was inavoidable.

---

[641] An example for India is given in Padoux 2010, 98: "[… C]es traditions shivaïtes en sont venues à former un ensemble, celui dit du Kula, où elles se répartissent en quatre transmissions (*âmnâya*), rattachées traditionnellement chacune à l'un des quatre points cardinaux."

[642] See translation in Tsangnyön 1982, 53-56, and Ducher 2017, 19-21. See Ducher forthcoming for an analysis of the influence of this song on the biographical tradition.

[643] "Grub thob bka' bzhi'i lo rgyus," in *'Brug lugs chos mdzod chen mo*, 47: 1-11, and especially 8 for the reference to Nāropa and Mar pa's four disciples. Nāropa's first disciple is generally called Manakaśrī.

[644] Lévi 1931.

[645] Peter-Daniel Szanto (personal communication, nov. 2014) tells me for instance that he found in a gloss to the Śaiva manual of Īśānaśiva technical terms for five generations of gurus: *guru*, *paramaguru*, *parameṣṭhiguru*, *pūjyaguru*, *mahāpūjyaguru*.

1.2.2. Maitripa

The second of Mar pa's two unrivalled gurus is Maitripa, from whom Mar pa mainly received the mahāmudrā and *Nāmasamgīti*. There exist several hagiographies of Maitripa in Tibetan, the longest one being compiled by Padma dkar po.[646] There also exists a Nepalese palm-leaf manuscript containing Sanskrit biographies of the *Amanasikāra* and *Vajrayoginī* lineages with an important biography of Maitripa, which may be the source of all others.[647] The author of this biography is a figure called Sāgara, who met Maitripa's master Śabareśvara at the same time as Maitripa, hence ends Maitripa's lifestory when Maitripa leaves Śabareśvara. As Maitripa's biography in the DK-DZO is not very detailed,[648] I here mainly rely on the Sanskrit version studied by Tatz, summarized as follows:[649]

> According to the Sham Shere manuscript, Maitrī-pa is born a Brahman named Dāmodara in the Middle Country (*madhyadeśa*). As a brahmanical renunciate named Martabodha, he is converted and taught general Mahāyāna by Naropa; then Rāgavajra teaches him *tantra*. He then studies the *nirākāra* philosophic system under Ratnākaraśānti. The sites of these studies are not named. Going to Vikramaśīla, he studies under Jñānaśrīmitra (an adherent to *sākāra*). From Vikramaśīla he proceeds to Vikramapura and is ordained a *bhikṣu* in the Sammatīya (!) school, his name becoming Maitrīgupta–hence the Tibetans' designation Maitrī-pa, from the honorific Maitrīpāda. Dream visions of Avalokiteśvara inspire him to remove himself to Khasarpaṇa, then to travel south in search of the *siddha* Śabareśvara. He receives the name Advayavajra in a waking dream that constitutes tantric initiation. (The name Avadhūti-pa, known from Sanskrit colophons and Tibetan historical tradition, is not attested by this text.) The account concludes with the last instructions and disappearance of Śabareśvara. In Tibetan accounts Advayavajra then returns to the great monasteries of the Middle Country to teach.

As Maitripa's life-story ends when his career as a Buddhist master starts, nothing is said about Mar pa. This biography does not clarify when Maitripa was born, but indicates how many years he spent with his various masters. Maitripa's dates are generally considered on the basis

---

[646] *Pad dkar chos 'byung*, 2: 286-298; Tāranātha & Templeman 1983, 11-13; *mKhas pa'i dga' ston*, 1: 772-774.

[647] The "Sham Shere Manuscript" of Maitripa's biography was discovered independently by Giuseppe Tucci (Tucci 1930) and Sylvain Lévi (Lévi 1931) in the library of the General Kesar Sham Shere Jung Bahadur Ranā (see NGMPP reel no. C 82/1). The two edited it, and Lévi also provided a first translation. See Tatz 1987 for a study of Maitripa's biography according to the Sham Shere manuscript manuscript, Brunnhölzl 2007, 125-131, for a more general examination of all sources, and Mathes 2015, 23-40 (esp. 29-40), for a translation of Maitripa's lifestory included in the DK-DZO. Mathes is also the author of many articles on Maitripa's thought, culminating in his 2015 monography, *A Fine Blend of Mahāmudrā and Madhyamaka: Maitrīpa's Collection of Texts on Non-Conceptual Realization (Amanasikāra).*

[648] Translated in Mathes 2015, 23-40.

[649] Tatz 1988, 473.

of ’Gos Lo tsā ba’s reckoning of them in the *Blue Annals*:[650] according to him, there are two traditions for Maitripa’s dating. The first, the “Upper School of Mahāmudrā,” comes from Maitripa’s disciple Vajrapāṇi. It states he was born in a **sheep** year (983, 995 or 1007). The second, the “school of the Lord Ras chung pa,” probably biographies from the sNyan brgyud tradition, states he was born in a **dog** year (986, 998 or 1010). Both consider he died in his seventy-eighth year. Roerich in his translation chose the later dates (1007 or 1010 for his birth). Tatz followed that lead and proposed Maitripa’s dates to be 1007-1085, expressing his reservation concerning Hakukyū Hadano’s earlier dating of Maitripa’s birth on the ground of Maitripa’s relationships with Mar pa and Atiśa.[651] As both Hadano and Tatz could only rely on Mar pa’s life story by gTsang smyon He ru ka, the matter could be examined again on the basis of earlier life stories of the translator and of what is now known about Atiśa and Nāropa.

First, one must note that the Sham Shere manuscript states that Maitripa spent twenty years with Nāropa, presumably before Nāropa’s “entering the practice” (*caryā*), i.e. before he stopped teaching or before he died, which is generally recognized to have happened in 1040. This means that Maitripa left Nāropa before 1040. As he is said to have been 38 then, it means he was not born later than 1003, which eliminates the proposition of Roerich and Tatz. Thus, if we chose to rely on Vajrapāṇi’s tradition, it means that Maitripa was born in either 983 or 995, or three years later according to Ras chung pa’s tradition. He was with Nāropa until 1020 or 1032 (or + 3), came back to teach in Madhyadeśa after his meeting with Śabareśvara after 1035 or 1047 (or + 3) and died in either 1060 or 1072 (or + 3), at 77 (78 in Tibetan counting).

Maitripa is pictured as having four main disciples. One of them, Vajrapāṇi, is said to have travelled to Nepal and then Tibet in 1066.[652] As it is likely that he left India only after his master Maitripa died, it would seem that the earlier dating might be correct, i.e. that Maitripa was born in either 983 or 986, and died in 1060 or 1063.

This early dating would fit better with Tāranātha’s reckoning of Maitripa’s death, which he considers having happened when Maitripa was 70:[653]

> King Bheyapala’s son was Neyapala. In the authentic biographies, it is stated that he became the king shortly before Jo-bo-rje [Atiśa] left for Tibet. There also exists a letter sent (by Atiśa) to him from Nepal. He ruled for thirty-five years. Nine years after he became the king, the powerful Maitri-pa passed away.

As Atiśa left in 1040, it means that Maitripa died at the latest in 1049, which would place his birth around 980. Although this seems a bit early, it backs an earlier dating of Maitripa’s birth and death.

---

[650] *Deb sngon*, 2: 985; BA, 841-842.

[651] Hadano 1959.

[652] BA, 856. The date, however, is given by Roerich with references to S.C. Das’ *Life of Sum-pa mkhan-po*.

[653] Tāranātha & Chimpa 1970, 305, for this quotation; Tāranātha & Templeman, 13, for the fact that he died at 70.

Let us now examine the various depictions of Mar pa's encounters with Maitripa to decide whether this dating stands. First, it must be recognized that Mar pa relied on him as his spiritual master mostly when Nāropa was performing the practice, but he is also said to have met him earlier. Ngam dzong ston pa states for instance that Mar pa first met Maitripa in Puśpahari (the name of Nāropa's ermitage) during his first trip, right after receiving instructions on *Hevajra* by Nāropa.[654] From Maitripa, Mar pa received again *Hevajra*, as well as *Nāmasamgīti* and the mahāmudrā. With the earlier dating, that would happen around 1020/1023, which is not impossible if Mar pa was born at the turn of the millennium. Although it is unlikely that Maitripa was already giving profound mahāmudrā teachings at the time, if one is to believe Tāranātha's description, he was leading a tantric life even before meeting Śabareśvara.[655] Mar pa is said to meet him again during his second, and last, journey to India, when Nāropa was in the practice and unavailable.[656] At that time, Maitripa was in the charnel ground of the Mountain Blazing like Fire, in the east of India. The text states that it was at that time that Maitrepa–called Avadhūtipa–accepted Mar pa as his disciple; he gave him the same transmissions as before and induced in him profound meditation experiences. Afterwards, Mar pa went in search of Nāropa. This again fits with the earlier dating, according to which Maitripa comes back to Madhyadeśa after 1035/1038, that is to say when Nāropa was in the practice and Mar pa searching for him. Ngam dzong ston pa's descriptions also fit with Mar pa's songs, in which Maitripa figures prominently.

rNgog mDo sde's biography of Mar pa states that Mar pa first met Maitripa at the peak of the Mountain Burning like Fire, near the banks of the river Ganges, right after his first encounter with Nāropa, during his first journey.[657] At the time, he mostly received teachings on mahāmudrā. He met him again during his second journey, when Nāropa was in the practice, and during the third journey, when he was searching for Nāropa and Maitripa foretold the meeting. None of the meetings are very detailed. The third main text in Mar pa's biographical tradition, the one from the Aural Transmission, says almost nothing about Maitripa. Mar pa meets him during his last journey in India. Despite the lack of details, he is said to stay seven years by his side.

On the basis of this analysis, I believe that an early dating for Maitripa fits most of the data we know about him. Although Vajrapāṇi's tradition is not impossible, I would rather favor Ras chung pa's, so as to postpone Maitripa's dates of birth and death by a few years. I therefore propose 986 as his birth and 1063 as his death, which are the dates accepted by Klaus-Dieter Mathes. As far as Mar pa's relationship with him is concerned, I believe he met him several times, at several places and stages of Maitripa's life. The fact that, according to Ngam dzong ston pa, Mar pa first encountered him when Maitripa was close to Nāropa would even justify that Nāropa sends Mar pa repeatedly to study with Maitripa. If one is to believe Padma dkar po's biography of Mar pa,[658] Maitripa had a consort, called Cluster of Banana

---

[654] Mon rtse pa, 87.

[655] Tāranātha & Templeman, 11-13.

[656] Mon rtse pa, 91-92.

[657] DK-DZO, 5: 169.

[658] *Pad dkar chos 'byung*, 440.

Tree (*chu shing gi nye ma cen*), even during Mar pa's first journey to India, and the translator received *Nāmasamgīti* and *Catuṣpīṭha* from her. When Mar pa went to India for the last time, Nāropa was performing the practice. Maitripa encouraged him to search for his guru by foretelling their meeting and assisted him in his translations.

1.2.3. Śāntibhadra

The third of Mar pa's four noble gurus is Śāntibhadra (*zhi ba bzang po*), from whom he received the *Mahāmāyātantra* and related instructions. That master is generally said to live on the island of a noxious lake, in the south of India.

In some biographies of Mar pa (KSTC, U rgyan pa and gTsang smyon), the name of Śāntibhadra occurs together with that of Kukuripa, the "Dog Lover," with Kukuripa's name appearing in the first part of the text and Śāntibhadra's in the second (Nāropa's quest). This may give the impression that Mar pa met two different masters, Kukuripa and Śāntibhadra. Kukuripa was one of the 84 *mahāsiddha*s and figured among Tilopā's masters. In what little is known about him (from Abhayadatta's tales on the 84 *mahāsiddhas*),[659] he is pictured as living in the area of Lumbini and Kapilavastu. Although gTsang smyon alludes to this place when Mar pa hides the identity of the person who introduced him to *Mahāmāya* from gNyos by sending him to Kapilavastu,[660] Mar pa is never said to actually travel there–although he may have passed by on his way to and from India. It is therefore generally clear that, even though Mar pa may have met Kukuripa in addition to Śāntibhadra, it is not a direct relationship. If a transmission occurred, it was visionary. The lineages of transmission outlined in the KGND indicate that Mar pa met the wisdom body of Kukuripa, but one does not find this terminology in the biographies themselves:[661]

> Long lineage: Heruka → Vajraḍākinī → *mahasiddha* Kukuripa → Saroruhavajra → Doṃbipa → Tilopa → Nāropa → Mar pa.
> Alternatively, Kukuripa gave the transmission to Nāropa, Kṛṣṇaśāntibhadra and Maitripa, and Mar pa received the initiation and instructions from both Nāropa and Śāntibhadra. He also received Śāntipa's tradition from Maitripa.
> Short lineage: Mar pa received the transmission from the wisdom body of Kukuripa.

In general, even when the two names are mentioned, they do not represent distinct masters but Kukuripa is simply an alias of Śāntibhadra. This is the case for example in the *Mahāmāyā* lineage given in ST1, where both names are mentioned:[662]

---

[659] See for example Dowman 1986.
[660] Tsangnyön 1982, 25.
[661] KGNDdkar chag, 30.
[662] ST1, 7: 7-8.

Lineage of *Mahāmāyā*: Mar pa received it from both Nāropa and **Kukuripa**. As for the other *sadhana*s: **Kukuripa**, Buddhapa, Dharmabhadra, **Śantibhadra**, Mar pa.

In this case, in the first occurrence Kukuripa stands for Śantibhadra, and in the second both masters are meant, first Kukuripa and then Śantibhadra. Glangs lha gzigs Ras pa explains that Śāntibhadra is also called Kukuripa because he was the most important holder of the *mahāsiddha* Kukuripa's lineage.[663] For him, they are referred to as "Kukuripa Senior" and "Kukuripa Junior" in the same way that Śabara (Maitripa's master) is sometimes called "Saraha Junior." Thus "Kukuripa" is another name for Śāntibhadra, who is the only one Mar pa met, and should be understood to be Kukuripa Junior. This is also the opinion of the 4th mTshur phu regent, who calls him "the one known as a second Kukuripa" (*ku ku ri pa gnyis par grags pa*) in his biography of Mar pa.[664] Another reason for this name, although it is not mentioned in Mar pa's biographies, might be Śāntibhadra's way of life and appearance: he is generally described as very ugly and hairy (resembling a monkey)[665] and living together with a consort who sometimes manifests as a bitch (hence "dog lover").[666]

Śāntibhadra is described by Nāropa as being the "owner" (*bdag po*) of the *Mahāmāyātantra*, i.e. one who attained *siddhis* based on that tantra and is therefore considered the main holder of the transmission. This is why Nāropa sends Mar pa study with Śāntibhadra, despite the hardships involved to encounter him.

In general (that is to say, according to what we know about Mar pa by having read his biography by gTsang smyon), Mar pa is sent to meet Śāntibhadra after he requested from Nāropa the *Mahāmāyātantra* mentioned by gNyos when comparing their achievements. To help Mar pa reach Śāntibhadra's residence, Nāropa summoned several yogis who accompanied Mar pa on his arduous journey in the lake to reach the island. While this description is found in most biographies and probably originates with the sNyan brgyud tradition,[667] another episode is found in rNam rdzong ston pa's narrative: during Mar pa's last journey to India, he visited Śāntibhadra again; during a *gaṇacakra*, a woman brought a corpse, and some nectar–made up of brain, blood and "secret liquid" of Śāntibhadra–was circulated among the practitioners. When it reached Mar pa, he had a vision of *Mahāmāyā*, and great realization ensued.

The name "Śāntibhadra" can refer to several masters at this period. One in particular is said to have translated many texts in the *bsTan 'gyur* with five 11th-century Tibetans, 'Gos Khug pa lhas btsas, Nag 'tsho Tshul khrims rgyal ba, Shākya 'od, rMa Chos 'bar and Chos kyi shes

---

[663] *Opening Eyes*, 63.

[664] rGyal mtshan phun tshogs, 189-190.

[665] See for example KSTC, 157, for the first occurrence of this description, which is repeated in almost every biography (for ex., Tsangnyön 1982, 17).

[666] rGyal thang pa, 156.

[667] KSTC, 156-158, for the episode in question, and Tsangnyön 1982, 17-24, for a translation of gTsang smyon's version.

rab, the first two being Mar pa's contemporaries. Erberto Lo Bue introduced this scholar in his article on "the Role of Newar Scholars in Transmitting the Indian Buddhist Heritage to Tibet (c. 750-c. 1200)," which is mainly based on information found in the *Deb ther sngon po* and on *bsTan 'gyur* colophons.[668] According to him, although the colophons lead one to believe that there was a Newar scholar called Śāntibhadra, *alias* Dza hūm, who was a pupil of Śāntipa and a teacher of Kṛṣṇapāda, and another one, from Rājagṛha, who worked with 'Gos lo, the two actually refer to an Indian scholar initially active in India who later settled in the Katmandu Valley, hence came to be known as Newar. He helped to translated several texts belonging to the Cittamatra and Madhyamaka schools. 'Brog mi Lo tsā ba is also said to have spent one year in Nepal studying Sanskrit with him.[669] It seems therefore substantiated to say that this Śāntibhadra–a scholar associated with the north of the Indian subcontinent–and the one Mar pa met–a *Mahāmāyā* yogi living in a southern remote island–are not one and the same. It is interesting to note, however, that one of the *bsTan 'gyur* colophons associates the Newar Śāntibhadra's name with that of Haṅdu dkar po.[670] This may refer to one of the Newar gurus Mar pa met when returning to Tibet after his first journey to India and for whom he sang about his understanding of ultimate reality, who is called Ha du dkar po in gTsang smyon's biography of Mar pa.[671] It is therefore possible that Mar pa met two Śāntibhadras, one in the south of India with whom he studied *Mahāmāyā*, and one in Nepal, with whom he did not study but who was a scholar who contributed to many Tibetan translators' efforts.

1.2.4. Jñānagarbha

The last of Mar pa's four noble gurus, from whom he received the *Guhyasamājatantra* and related instructions, was Jñānagarbha (*ye shes snying po*). Despite his importance in Mar pa's life story, Jñānagarbha is a rather unknown figure in India. Again, there are several masters with that name. One was the 8th-century svatantrika-madhyamaka philosopher who gave his ordination to Śāntarakṣita.[672] The one with whom Mar pa studied was an 11th-century master of the Ārya tradition of *Guhyasamāja*, generally referred to as "paṇḍita Jñānagarbha" or the "scholar (*mkhas pa*) Jñānagarbha." Although nothing indicates that the two are one, the biography by rNgog mDo sde specifies that Jñānagarbha was a Svantāntrika Madhyamaka follower, maybe because the author knew of the scholar who played a great role during the first diffusion of Buddhism in Tibet.

In the KGND, 'Jam mgon Kong sprul Blo gros mtha' yas describes the long lineage in which Jñānagarbha appears as follows:[673]

> Vajradhara → Vajrapāṇi → Indrabhūti → the *ḍākinī* who was an emanated *nāga* (*klu las gyur pa'i rnam 'byor ma*) → Visukalpa → Saraha → Nāgārjuna

---

[668] Lo Bue 1997, 639-643.
[669] *Deb sngon*, 257.
[670] Lo Bue 1997, 642.
[671] Tsangnyön 1982, 39.
[672] Eckel 1987; BA, 34.
[673] KGNDdkar chag, 33.

→ Āryadeva / Śākyamitra / Nāgabodhi / Mātaṅgī → **Candrakīrti** → Śiṣyavajra (*slob pa'i rdo rje*) → Kṛṣṇasamayavajra (*nag po dam tshig rdo rje*) → Vimalamati (*dri med blo gros*) → **Jñānagarbha** (*mkhas pa ye shes snying po*).
Alternatively: **Candrakīrti** → Vidyākokila (*rig pa'i khu byug*) → Avadhuti → *Caryāvajra (*spyod pa'i rdo rje*) → Kṛṣṇapāda (*nag po'i zhabs*) → Vimalamati (*dri med blo gros*) → **Jñānagarbha** (*ye shes snying po*).[674]

Not much is known about Vimalamati, the master from whom Jñānagarbha received the transmission.

As for his works, a Jñānagarbha is said to be the author of a commentary on the *Guhyasamājatantra*, the *Caturdevatāparipṛcchāṭīkā* (*lha mo bzhis yongs su zhus pa'i rnam par bshad pa*).[675] As this was translated by Smṛtijñānakīrti, considered an earlier contemporary of Rin chen bzang po[676] transmitting Jñānapāda's tradition of the *Guhyasamāja*,[677] it is unlikely that the Jñānagarbha in question was the one who met Mar pa. A Jñānagarbha is also the author of the *Śmaśānavidhi* (*Ro sreg pa'i cho ga*),[678] a text associated with the *Hevajratantra*. No translator is indicated, so it is difficult to assess whether this may refer to the same Jñānagarbha or not. As Mar pa's master is not known for his transmission of *Hevajra*, this may not be the case either. The other references in the *bsTan 'gyur* associated with Jñānagarbha's name all refer to the 8th-century philosopher.[679]

Although no text in the *bsTan 'gyur* seems to be related to Mar pa's Jñānagarbha, there is in the *bKa' 'gyur* a *Guhyasamāja* text that Mar pa translated with Jñānagarbha.[680] rNgog mDo sde's biography states that Mar pa studied that tantra with Nāropa (who was by then performing the practice) and translated it afterwards with Jñānagarbha.[681] As indicated by Roerich in a note of the *Blue Annals*,[682] Bu ston Rin chen grub did not consider this text to be an authentic tantra, and favored a shorter *gNyis med rnam rgyal*, which he retranslated himself. Despite its controversial status, this long translation indicates that Mar pa spent a

---

[674] See Tsongkhapa & Kilty 2013, 59 ff. for more details. For comparison, the lineage 'Gos Khug pa lHas btsas brought to Tibet similarly goes down to Kṛṣṇācārya (*nag po pa*), but then to Gomiśra (*sa 'dres pa*), Abhijña (*mngon shes can*) and 'Gos (see BA, 359-360). Kṛṣṇasamayavajra is also a direct teacher of 'Gos so may be distinct from Kṛṣṇācārya. 'Gos is said to have studied *Guhyasamāja* with over 70 gurus and to have spread mainly the traditions he received from Abhijña from Bengal, Devīkara from Zahor and Kṛṣṇasamayavajra from Bodhgaya.

[675] Tôh 1916, Dergé Tanjur, vol. *phi*, ff. 250r1-267r7.

[676] See section I.2 for an account of Smṛtijñānakīrti.

[677] See Kongtrül 2010, 278, for a short history of the *Guhyasamāja* lineages that entered Tibet.

[678] Tôh 1282. Dergé Tanjur, vol. *ta*, ff. 134r5-137r1

[679] Tôh 2695, 2696, 3881, 3882, 3909, 4033, 4538.

[680] Sarvatathāgataguhyatantra-yogamahārājādvayasamatāvijaya-nāma-vajraśrīvaramahākalpādi (*Dpal de bzhin gshegs pa thams cad kyi gsang ba rnal 'byor chen po rnam par rgyal ba zhes bya ba mnyam pa nyid gnyis su med pa'i rgyud kyi rgyal po rdo rje dpal mchog chen po brtag pa dang po*). Tôh 453. Dergé Kanjur, vol. *cha*, ff 103r.3-331r.5.

[681] DK-DZO, 5: 173.

[682] BA, 417.

long time together with Jñānagarbha and that the Indian guru played a great role in his formation.

The biography in which their relationship is the most detailed is the one by Ngam dzong ston pa, which is also the earliest. Unlike later biographies that tend to magnify Nāropa's role in Mar pa's formation, Ngam dzong ston pa describes that Jñānagarbha was the first master that Mar pa met in the West of India, at a place called Lakśetra. Mar pa spent five years there, and received the *Guhyasamājatantra* together with instructions on the illusory body (**māyākāya/māyādeha*, *sgyu lus*) and on luminosity (*prabhāsvara*, *'od gsal*). Most importantly, he also met many other yogis in Lakśetra, among them Paiṇḍapa, who introduced him to Nāropa.[683] When Mar pa visited Jñānagarbha again during his last journey to India, the paṇḍita is said to live together with a low-caste woman, who induced a profound realization of *Guhyasamāja* in Mar pa.[684] In all of these encounters, Jñānagarbha is described as leading a very tantric life, in line with the antinomian teachings of the *Guhyasamājatantra*.

1.2.5. The yoginī

Although the *lHo rong chos 'byung* mentions "four noble masters," associated with the four directions in one of Mar pa's songs,[685] many biographies also mention five main gurus, a number derived from another song, where Mar pa mentions five *siddhas* (*grub thob zhal lnga*).[686] This fifth master is generally considered to be a *yoginī* from whom Mar pa received the *Catuṣpīṭhatantra*. There exists no substantial description of his interaction with her, except during the quest for Nāropa: Mar pa spends a month with her in the charnel ground of Sosadvīpa (*so sa gling*), and she predicts his future meeting with Nāropa. She has different names in the various versions. In some cases, she is called Cluster of Banana Trees (*chu shing gi nye ma can*),[687] and in others Endowed with Bone Ornaments (*rus pa'i rgyan can*), or Endowed with Human Bone Ornaments (*mi rus pa'i rgyan can*).[688]

Here is the way Kong sprul presents Mar pa's lineage of *Catuṣpīṭha* in the index of the KGND:[689]

> Vajradhara → Guhyapati (*gsang ba'i bdag po*) → Nāgārjuna → Āryadeva → Tilopa → Nāropa → Mar pa
> <u>Alternatively</u>, Nāropa → the Newar dGe ba'i go cha / sPyi ther pa rNam rgyal dbang po → Mar pa
> <u>Also</u>: Āryadeva → *ḍākinī* Endowed with Human Bone Ornaments → Mar pa
> Mar pa also received it from Maitripa's consort Cluster of Banana Tree.

---

683 Mon rtse pa, 85-86.
684 Mon rtse pa, 90.
685 Ducher forthcoming.
686 Tsangnyön 1982, 117.
687 DK-DZO, 5: 176.
688 See for ex. KSTC, 176, U-rgyan-pa, 130…
689 KGNDdkar chag, 31.

Although this may imply that for Kong sprul Cluster of Banana Tree and the *ḍākinī* Endowed with Human Bone Ornaments are distinct, this is generally not the case in the biographies. In the *Rosaries*, it is said that there is a short lineage of *Catuṣpīṭha* going straight from Vajradhara to Cluster of Banana Tree and Mar pa and Endowed with Human Bone Ornaments is not mentioned.[690] Padma dkar po explains in his biography of Mar pa that Cluster of Banana was Maitripa's consort. Once, while Mar pa is shedding himself from the rain under a house, he sees her abnormally stretching her arm to fetch a falling broom. Recognizing her as his master's consort and witnessing her accomplishment, he offers her a maṇḍala of gold and requests teachings from her.

Although the details about this particular yoginī are scarce, Mar pa's encounters with women–described as yoginīs or *ḍākinī*s–are widespread in the biographies. The crucial role played by Śāntibhadra and Jñānagarbha's *mūdra*s was described above. According to rNam rdzong ston pa, while he was journeying back to Tibet for the last time, he also met a woman and her daughter in an orchard. The mother, a *ḍākinī*, cast all the fruits to the ground with a gesture: Mar pa looked inside of one, and had a vision of Nairātmyā, Hevajra's consort.[691]

There is no mention in Mar pa's biographies of any *ḍākinī* or yoginī who was Nāropa's consort. Endowed with Human Bone Ornaments is nevertheless unambiguously described as "Nāropa's wife Niguma" in the *Life of Marpa* rendered in English by the Nālandā Translation Committee.[692] Sarah Harding refuted such "marital" relationship between Nāropa and Niguma–whose fame comes from her association with Khyung po rnal 'byor and his ensuing founding of the Shangs pa bka'i brgyud lineage–showing that Nāropa and Niguma's biographies indicate that she was his sister rather than his wife.[693] The Nālandā Translation Committee's confused identification probably derives from the tradition which generally considers that a yoginī living in Sosadvīpa manifested regularly to several Tibetans coming to India: she was Mandarava for Padmasambhava, Endowed with Human Bone Ornaments for Mar pa, Niguma for Khyung po rnal 'byor and Queen of Siddhis (*grub pa'i rgyal mo*) for Ras chung pa. The charnel ground of Sosadvīpa, however, is a famous *ḍākinī* gathering spot, and the fact that several women are described as staying there is no sufficient reason to consider them as one, and it is therefore unjustified to say that Mar pa met Niguma, or that Endowed with Human Bone Ornaments was Nāropa's consort.

---

[690] ST1, 7.6-7; ST2, 32.6-7.

[691] Mon rtse pa, 97. One should note the proximity between this encounter and an almost similar one in Maitripa's past life as Jvālapati (translated in Mathes 2015, 24-28). Unlike Mar pa, who establishes a fruitful relationship with that yoginī, Jvālapati (alias Kṛṣṇācārya) gets angry with her and is killed. It is probably not the same yogini referred to in both cases, but it is likely that this episode in Maitripa's life inspired the authors of Mar pa's biography.

[692] Tsangnyön 1982, xliii.

[693] Harding 2010, 1-6.

1.3. Mar pa's disciples: the "four pillars" and their lineages

One of the most widespread representations of Mar pa's disciple is the one that distinguishes between four "great pillars" (*ka chen*), each associated with a direction and an animal. The metaphor occurs for the first time in Mar pa's biographies within the *Deb ther dmar po*,[694] written in 1346, and one century later in the *lHo rong chos 'byung*.[695] The reason for this relatively late occurrence is that its first formulation occured not in Mar pa's life story, but in Mi la ras pa's. One indeed finds in one of the earliest of Mi la ras pa's biographies, *The Twelve Great Disciples* (*Bu chen bcu gnyis*), a song attributed to Mar pa in which he describes the prophetic dream he had about the way his transmission would continue among his disciples. This song occurs upon Mi la ras pa's departure for his homeland, when, on a nostalgic morning, all of Mar pa's entourage bid him farewell.[696]

This biography is described by Andrew Quintman in his study of Mi la ras pa's life stories.[697] He considers the *Twelve Great Disciples* to be a "biographical compendium," in the sense of "an assortment, a varied collection," that portrays its "subject using a far richer palette than previous writings" and that "encompass[es] two forms of biographical literature: liberation narratives [*rnam thar*] and song collection [*mgur 'bum*]."[698] Despite this presentation leading one to believe that the biography was compiled quite late, Quintman conjectures that it might have been recorded as early as the 12th century, as it is said to have been taught by Ngam rdzong ston pa and eleven other disciples of Mi la ras pa. It therefore represents an equivalent to Mar pa's biography in the Aural Transmission tradition,[699] that is to say a crucial foundation in the elaboration of Mi la ras pa's biography. Just like Mar ston's biography in Mar pa's biographical tradition, the *Twelve Great Disciples* had a great influence on the rest of Mi la ras pa's biographical tradition. As the latter came to play a great role in Tibet's religious history, it is no wonder that this presentation of the four great pillars became so well-known. One must note, however, that its most famous avatar was in the "pen" of gTsang smyon, who recorded this song in both his *Life of Mi la ras pa* and his *Life of Mar pa*.[700] In this version, the dream is not Mar pa's but Mi la ras pa's, while the interpretation remains Mar pa's. The *Rain of Wisdom*, a collection of spiritual songs of the Karma bka' brgyud lineage compiled by Karma pa Mi bskyod rdo rje half a century later, follows the *Twelve Great*

---

[694] *Deb dmar*, 75.

[695] *lHo rong chos 'byung*, 48.

[696] See a translation of the song in Quintman 2006, 317-319. The biography is translated pp. 292-374.

[697] Quintman 2006, revised in Quintman 2014. See a full description of the *Twelve Great Disciples*' editions and manuscripts, its name and date and its contents and specificities in Quintman 2014, 86-104. See a review of that work in Ducher 2015a.

[698] Quintman 2014, 82-83.

[699] See Ducher 2017, 72-83. To cut a long presentation short, I consider this text, called KSTC in my study, to be the work of Mar ston Tshul khrims 'byung gnas, who was one of the three main disciples of Khyung tshang pa, Ras chung pa's foremost disciple, probably in the late 12th century. It is possible that KSTC and the *Bu chen bcu gnyis* were compiled at the same time, within a larger golden rosary of the Aural Transmission, as both texts have the bipartite division in qualities. It is also possible that the *Bu chen bcu gnyis* was compiled earlier, by direct disciples of Mi la ras pa, and served as a model for later biographies of the Aural Transmission, such as KSTC, and progressively of other traditions as well.

[700] See Tsangnyön 2010, 95-100, for the former, and Tsangnyön 1982, 1, for the latter.

Disciples, with both the dream and its interpretation by Mar pa.[701] Logically, the song features in the part on Mi la ras pa.

A presentation that is more widespread in Mar pa's biographies is the one that distinguishes between four "heart sons" (*thugs kyi sras*), four "dharma sons" (*chos kyi sras*), or four "disciples that pleased him" (*mnyes pa'i bu*). It is this presentation that sums up Mar pa's disciples in the *Rosaries*:[702]

> The Venerable Mar pa had four great heart-sons: rNgog ston Chos rdor from gZhung, 'Tshur ston dBang nge from Dol, Mes ston tshon po from gTsang rong and Mid la ras pa from Gung thang.

The four are described as follows:

- rNgog ston Chos rdor from gZhung is associated with the south and is the disciple who pleases Mar pa with his wisdom.
- 'Tshur ston[703] dbang nge from Dol is associated with the east and is the disciple who pleases Mar pa with his magic.
- Mes ston from rTsang rong is associated with the west and is the disciple who pleases Mar pa with his service.
- Mi la ras pa is associated with the north and is the disciple who pleases Mar pa with his devotion.

One also finds in the *Twelve Great Disciples*, and in later biographies of Mi la ras pa, a further paradigmatic narrative of Mar pa's spiritual legacy that distinguishes the main disciples according to the transmission Mar pa gave them. The text states:[704]

> Toward daybreak of the evening in which he performed the profound empowerment of Nairātmya, he had observed what activities his four great disciples were carrying out. Mes ston of rTsang rong was meditating on clear light; [Mar pa] thought, "I have [the teachings on] clear light like a lamp inside a vase, he shall transmit this." Tshur ston dbang nge of Dol was meditating on transference [of consciousness]; [Mar pa] thought, "I have [the teachings on] transference like an arrow shot through a window, he shall transmit this." rNgog ston Chos rdor of gZhung was reading a text; he thought, "I have the explanatory tantras which are like a coursing river, he shall transmit this." [Mar pa] looked at Mi la ras pa who was practicing control of the subtle winds; he thought, "I have the [instructions on] yogic heat [like] fire blazing on dry kindling; he shall transmit this."

The transmission received by each of the disciple is more explicit in the *mKhas pa'i dga' ston* for example, which states:[705]

---

[701] Nālandā 1999, 169.

[702] ST1, 23: 3-4.

[703] Both spelling 'Tshur ston and mTshur ston are found in sources.

[704] Quintman 2006, 310. This is 10b in the Newark Manuscript.

> To rNnog, he gave the explanation of the *Hevajratantra*, etc., as well as the merging and transference; to mTshur ston, *Guhyasamāja* and *pañcakrama*; to Mes tshon po, *Mahāmāya* and luminosity; and to Mi la ras pa, he mainly taught inner heat and [gave] him all instructions.

These four disciples are the ones whose life is described at the end of almost every biography of Mar pa. Although other classifications and other definitions of the four exist (with these four alongside other sets of four containing other names), this one is the most relevant in the present study, which aims at a presentation of Mar pa's legacy in Tibetan Buddhism, culminating in Kong sprul's compilation of the *bKa' brgyud sngags mdzod*. I will therefore summarize in the following what we know about each of these disciples and about what they received from Mar pa. For rNgog Chos rdor, I will only give a short summary pertaining to the four-pillar metaphor, as he is the subject of a more comprehensive study in section II.3.1. For Mi la ras pa, I will confine myself to a short presentation of Mi la ras pa's place as Mar pa's disciple, eliding a longer study of his life, which would far outreach the present work and overlap with the research of several other scholars.[706] To conclude this presentation of Mar pa's main disciples, I will also provide an account of Mar pa mGo yag's life, who is the one most present in Mar pa's biographies, despite playing no role in the transmission that reached Kong sprul.

1.3.1. rNgog ston chos rdor from gZhung

Here is the way gTsang smyon describes rNgog's share of Mar pa's spiritual legacy in his *Life of Mi la ras pa*:[707]

> To lama Ngokpa he gave the heart-instructions on the method of explaining the tantras from the perspective of the six parameters and the four modes, strung together like pearls, as well as Nāropa's six ornaments, his ruby rosary, a pair of ritual ladles for making burnt offerings, and an Indian commentarial text. Then he said, "Benefit beings by explaining the dharma."

Among Mar pa's disciples, rNgog Chos rdor was the one who played the greatest role in Mi la ras pa's formation and hence appears as the most prominent in the yogi's life-story. sGam po pa states, for example, in his biography of Mi la ras pa that he studied with rNgog for one year, cast a hail storm upon rNgog's enemies and served him.[708] The text of the *Twelve Great Disciples* is more specific:[709] desperate because of Mar pa's refusal to grant him any instruction and through bDag med ma's scheming, Mi la ras pa was sent to gZhung, where he offered Nāropa's hair, rosary and vestments to rNgog. rNgog demonstrated his realization by ressurecting many birds that had been killed because of Mi la ras pa's magic against rNgog

---

[705] *mKhas pa'i dga' ston*, 775-776.

[706] Foremost among them Andrew Quintman and Peter Alan Roberts.

[707] Tsangnyön 2010, 100.

[708] See translation in Quintman 2014, 192. It must be remembered that sGam po pa's biography is closely related to the *Rosaries*.

[709] See translation in Quintman 2006, 304-309.

enemies–i.e. people who had assailed his monks. He then gave him instructions and sent him into retreat in a nearby cave, but to no avail. Finally, Mi la ras pa accompanied rNgog back to Mar pa's home, where rNgog provided Mar pa with numerous offerings. In return, he is said to have received the sealed teaching of the *sNyan dril yid bzhin nor bu*. The same is described in more details in gTsang smyon's biography of Mi la ras pa, which seems to have had a great effect on the definition of the gZhung valley's geography, particularly with regards to Mi la ras pa's cave there, the platform where he offered prostrations, etc.[710]

Although the rNgog came to be known chiefly for their transmission of the *Hevajratantra*, this excerpt only mentions the rNgog pa's role as propounders of the exegetical aspect of Mar pa's tradition. As regards Nāropa's ornaments, they remained in the rNgog pa's family until they were offered by rNgog Byang chub dpal (1360-1446) to one of his disciples, the second 'Brug chen Kun dga' dpal 'byor (1428-1476). The ornaments remained an important feature of the 'Brug pa tradition until today, when they are displayed every monkey year (last in 2016) by the rGyal dbang 'brug pa.[711]

1.3.2. mTshur ston dBang nge from Dol

Biographies are generally not very prolific on mTshur ston dBang nge, generally only providing an account of what he received from Mar pa:[712]

> To Tsurtön Wangé of Dol he gave teachings on ejection, likened to a bird flying th[r]ough an open skylight, as well as Nāropa's hair, fingernails, nectar pills, and a ritual crown of the five Buddha families. Then he said, "Train in the practice of ejection."

Yet, religious histories insist on the fact that he transmitted Mar pa's *Guhyasamāja* tradition. mTshur ston, the "eastern pillar" likened to a lion, indeed mainly received from Mar pa the transmission of the *Guhyasamājatantra* and the associated key instructions, called the Five Stages (*pañcakrama*, *rim pa lnga*). He also held Mar pa's *Buddhakapāla* transmission, but there is even fewer information about this than about the other lineages. He was also known for his practice of ejection (*'pho ba*).

mTshur ston came from the lower part of the Dol valley, just east of the gZhung valley, home to the rNgog family.[713] He was the son of a great sorcerer of the mTshur clan, who taught him black magic. Prior to receiving the *Guhyasamāja* transmission from Mar pa, he was asked to magically kill the Translator's cousin, Mar pa Mon nag. As he did, he became the disciple "who pleased Mar pa with his magic." It is quite ironic that it was mTshur ston who helped Mar pa with his dark skills, when it is generally Mi la ras pa who is well-known for them,

---

[710] See section II.5.2.

[711] See II.3.5.

[712] Tsangnyön 2010, 100.

[713] Most details on the life of mTshur ston can be found in the *Deb sngon*, 500-501 (BA, 414-416), which contains a chapter on Mar pa's tradition of the *Guhyasamāja*, that passed through mTshur ston and eventually went to Bu ston and Tsong kha pa (*Deb sngon*, 500-511)

although he was not asked to perform any magic by Mar pa, but by rNgog, who wanted to get rid of his enemies. mTshur ston does not appear to have been a prolific author; despite the TBRC attaching several works to his name (see P3074), they are actually the work of mTshur Lo tsā ba Ye shes ’byung gnas (P4308), who was a disciple of Maitripa’s student Vajrapāṇi, and mTshur ston dbang nge’s contemporary.

Guhyasamāja

According to Bu ston,[714] although Mar pa received *Guhyasamāja* of the Noble’s Tradition from Nāropa and Jñānagarbha, it was the former transmission–the tantra (*rgyud rkyang*) with the key-instructions (*rim lnga’i man ngag/dmar khrid*)–that he gave to mTshur ston. Jñānagarbha’s lineage–that of the learned paṇḍitas–contained the root tantra, the explanatory tantra as well as the commentarial tradition. Mar pa may have given it to mTshur ston as well, but it was not for it that “Mar pa’s Tradition” (*mar lugs*) became famous. Mar pa also possessed a few transmissions from Jñānapāda’s *Guhyasamāja* Tradition. As it did not contain any explanation combining the meaning of the tantra with key-instructions, however, he favored Nāropa’s tradition and did not pass Jñānapāda’s on to his disciples.[715]

mTshur ston had three main disciples: ’Khon Gad pa kirti, Khams pa Ro mnyam rdo rje, and ’Ches ston bSod nams rgyal mtshan.[716] Nothing is known about the third, but the life of Ro mnyam rdo rje from Khams is recounted in several sources,[717] as he is the author of a large commentary on Mar pa’s *Guhyasamāja* Tradition.[718] Ro mnyam rdo rje went to India to receive *Guhyasamāja* from Maitripa, but as Maitripa had died and as he found no one else, he returned to Tibet with the hope of studying with Mar pa. *En route*, he met two Indians who told him that Mar pa too had died and that they were going to Tibet to study with his student, mTshur ston.[719] Ro mnyam rdo rje attended Mar pa together with ’Khon Gad pa kirti. He composed a commentary on the tantra whose lineage traces back to Tilopa, Nāropa, Mar pa

---

[714] *gSang ’dus chos ’byung*, 82.

[715] *Deb sngon*, 501.

[716] The latter’s name is spelled Phyed ston bSod nams rgyal in the *lHo rong chos ’byung*, 68.

[717] BA, 416-418; *lHo rong chos ’byung*, 69;

[718] The commentary is in vol. 28 of the NKSB: *dPal gsang ba ’dus pa’i rgyud kyi rnam par bshad pa dri ma med pa ye shes kyi snang ba*. Another reason why Ro mnyam rdo rje’s life became famous may be to promote Mar pa’s *Guhyasamāja* tradition. A testimony to that is the remark by ’Be lo Tshe dbang kun khyab in the *Rosary of Crystal Gems*, 73: he states that even though Mar pa and ’Gos Khug pa lHas btsas are generally considered equals in Tibet, Mar pa’s superiority is clearly shown by several points: Mar pa studied *Guhyasamāja* with Nāropa together with Jñānākarasiddhi, who became ’Gos’s teacher; two Indians came to Tibet with Khams pa Ro mnyam rdo rje to study Mar pa’s *Guhyasamāja* transmission with mTshur ston; Mar pa had visions of Saraha and Kukuripa; and he received transmissions from superior deities (*lhag pa’i lha*).

[719] This is the version of the *Deb sngon*. According to the *lHo rong chos ’byung* 69, Ro mnyam rdo rje initially wanted to study with Nāropa, but as the latter was performing the practice, he went to see Maitripa in order to get the rare texts that Mar pa did not previously receive. He learned of Maitripa’s death when he was about to return to India, and of Mar pa’s while returning to Tibet. He therefore studied with mTshur ston. This version seems chronologically impossible, as it implies that Nāropa, Maitripa and Mar pa died over a short period of time. ’Gos Lo tsā ba’s version mentioning only Maitripa and Mar pa is more likely, although it would mean that the two died at approximately the same time (or that news of Maitripa’s death took a long time to reach Tibet).

and mTshur ston,[720] as well as an empowerment ritual modelled on one by Nagarjuna.[721] According to ’Gos Lo,[722] one finds in this commentary by mTshur ston references to Mar pa’s summary of the *Guhyasamājatantra*, which proves that the *gNyis med rnam rgyal chen po* that Mar pa translated with Jñānagarbha is an authentic scripture, contrary to the opinion of later Tibetans (Bu ston is mentioned in the English version although his name does not appear in Tibetan) that this scripture was an apocrypha written by rGya Pho ba lung ba.[723] This yogi appears five generations later in the lineage of the *Guhyasamājatantra* received by the third Karma pa and played an important role in the transmission of the rNgog family lineage.[724]

mTshur ston’s second disciple, ’Khon Gad pa kirti, was the main one who continued Mar pa’s *Guhyasamāja* lineage in Tibet. He was a scholar of that tantra who studied it for long with Mang ra Seng ge rgyal mtshan, ’Gos khug pa lhas btsas’s foremost disciple. In search of key-instructions that would help him putting the tantra into practice, he came to mTshur ston, thanks to whom he had profound experiences and visions.

The life of the following members of the lineage is described in the *Deb ther sngon po* in some detail;[725] basically most of them were great scholars of ’Gos’s *Guhyasamāja* tradition but reached realization thanks to Mar pa’s tradition, which was especially blessed by Nāropa’s key-instructions and hence very fit for meditation. Here is the way Kong sprul presents Bu ston’s lineage,[726] with my additions to clarify the names according to Bu ston’s *gSang ’dus chos ’byung*,[727] the *Deb ther sngon po*,[728] and the *lHo rong chos ’byung*:[729]

> Mar ston chos kyi blo gros → mTshur ston dBang gi rdo rje → ’Khon ston Gad pa kīrti → Bya khang pa bSod nams rin chen[730] → Thur la ba Tshul khrims skyabs → Thang ’phel/Thang se ’Phags pa skyabs → gSer sdings pa gZhon nu

---

[720] NKSB, 28: 504.

[721] The text of the ritual was probably unavailable to ’Gos Lo tsā ba as he states (*Deb sngon*, 502) that “he appeared to have composed…” The ritual by Nāgārjuna is the *Guhyasamājamaṇḍalavidhi* (*Dpal gsang ba ’dus pa’i dkyil ’khor gyi cho ga*), Tôh 1798.

[722] *Deb sngon*, 502; BA, 416-418. One must note that this part of the *Blue Annals* is full of Roerich’s remarks within his translation, and is mostly unintelligible. The Tibetan is much clearer.

[723] Tôh 453. See BA, 417; *Deb sngon*, 1: 502.

[724] KGNDdkar chag, 33, l. 6. See section II.3.3.2.

[725] BA, 418-426; *Deb sngon*, 504-511.

[726] KGNDdkar chag, 34.

[727] *gSang ’dus chos ’byung*, 80-82.

[728] *Deb sngon*, 504-511.

[729] *lHo rong chos ’byung*, 68-69.

[730] The lineage is complicated at this point in the *lHo rong chos ’byung*, 69-70: Bya khang pa bSod nams rin chen gave it to his three disciples: Mi nyag **Thur la pa,** dBus pa dkar dge, and the siddha **Zhang zhung pa**. The three gave it **to** Gang bar gser kha’i rin chen gling pa Tshul khrims mdzes, and then to → bla ma rGya rNal ’byor Pho ba lung ba → moine Chos grags bzang po → bla ma gSer sding pa Shākya gzhon nu.

’od → dGe sdings pa Chos sku ’od zer → Phags ’od Yon tan rgya mtsho[731] → Bu ston Rin chen grub.

Among the lineages coming from Mar pa, this was historically the most important as it reached Bu ston, who was the recipient of six traditions of the *Guhyasamāja* Ārya Tradition:[732] that of Mar pa just described (*mar lugs*), and those of ’Gos Khug pa lhas btsas (*’gos lugs*),[733] Atiśa (*jo bo lugs*), Chag Chos rje dpal (1197-1263/4; *chag lugs*), Sa skya paṇḍita (*sa lugs*) and dPyal Chos kyi bzang po (*dpyal lugs*), the last two deriving from the Kashmiri Śakyaśrī’s tradition (*kha che lugs*). It was Bu ston’s disciple, Khyung lHas pa gZhon nu bsod nams (14th century), who taught this practice to Tsong kha pa (1357-1419), who made the *Guhyasamājatantra* the chief tantra of the dGa’ ldan order.

Kong sprul indicates several other lineages in the KGND,[734] which are the ones from whom he received his own transmission of *Guhyasamāja*. A first alternative version goes through the Third Karma pa Rang byung rdo rje (1284-1339) and the Fourth Zhwa dmar pa Chos kyi grags pa (1453-1524). Two more go from Bu ston to Padma dkar po (1527-1592) and to Tāranātha (1575-1634), and then on to Kong sprul.

Buddhakapāla

According the the lineages recorded in the KGND, mTshur ston also received *Buddhakapāla* from Mar pa and gave it to his disciples ’Khon ston Gad pa kīrti and Khams pa Ro mnyam rdo rje, but nothing much is said about it in the religious histories. The reason may be that the transmission of this tantra is based on three commentaries,[735] among which the most influential was the one by Abhayākaragupta (beg. 13th c.), who only reached Tibet after Mar pa first introduced this tantra. The transmission included in the KGND is based on the commentary and initiation ritual by Saraha, on Abhayākaragupta’s commentary, and on the Tibetan compilations composed by the fourth Zhwa dmar (1453-1524) and Tāranātha (1575-1634). The latter’s transmission was supplemented by the teachings received from his Indian guru, Buddhaguptanātha. It is therefore likely that at Mar pa’s and mTshur ston’s time, the *Buddhakapāla* transmission was not considered major and that it was completed only later.

---

[731] His life is described in detail in the *gSang ’dus chos ’byung*, 83 ff.

[732] KGNDdkar chag, 34. See also Kongtrül & Ngawang Zangpo 2010, 277-278.

[733] This tradition is also called “rNgog lugs” as it went through rNgog Mu ni, rNgog Āryadeva, etc. See for example *gSang ’dus chos ’byung*, 85. One thus should not mix the “rNgog lugs” of *Guhyasamāja*—that of rNgog Mu ni—and the “rNgog lugs” of *Hevajra* or *Mahāmāyā* (*gSang ’dus chos ’byung*, 85-86), which is the traditions of the rNgog family from gZhung. As pointed out in section II.2.2, the *Guhyasamāja* “rNgog lugs” should rather be called “rDog lugs,” rDog being the most likely name of that family.

[734] KGND, 33-34.

[735] The tantra, called *Buddhakapāla-nāma-yoginītantrarāja* (*dPal sangs rgyas thod pa zhes bya ba rnal ’byor ma’i rgyud kyi rgyal po*, Tôh 424) and its first commentary, by Saraha (*dPal sangs rgyas thod pa’i rgyud kyi dka’ ’grel ye shes ldan pa*, tôh 1652) was translated by Gyi Jo Zla ba ’od zer under Gayadhara’s direction. The other two, by Padmavajra (*Sangs rgyas thod pa’i rgyad kyi dka’ ’grel de kho na nyid kyi zla b*a, tôh 1653) and Abhayākaragupta (*dPal sangs rgyas thod pa’i rgyud kyi rgyal po chen po’i rgya cher ’grel pa ’jigs pa med pa’i gzhung ’grel*, tôh 1654), were first translated by Ding ri Chos grags and revised by dPang Lotsāba Blo gros brtan pa (1276-1342).

Ejection (’pho ba)

Despite the ubiquity of mTshur ston’s transmission of the *Guhyasamājatantra* in the religious histories, in the biographies he is famous for being the one who received Mar pa’s teachings on ejection (*’pho ba*). Although none of the general religious histories specify how the transmission happened, an account of the transmission of a specific collection containing instructions on ejection is available in Kong sprul’s *gDams ngag mdzod*, in the bKa’ brgyud section, in the part on instructions from the Aural Transmission.[736] The text is called *History, Main Texts and Appendices for the Aural Scrolls of Special Instructions of the Lord from lHo brag,*[737] generally abbreviated as the *Four Aural Scrolls* (*sNyan gyi shog dril bzhi*). This collection was studied by Ching Hsuan Mei in her 2009 PhD dissertation on “the Development of ’Pho ba Liturgy in Medieval Tibet” from the University of Bonn.[738]

The four doctrinal texts are preceded by an historical account of the way Mar pa received them.[739] Two texts come from Nāropa:

1. The Net-Cakra of *Nāḍī* and *Prāṇa* (*rtsa rlung drwa mig ’khor lo*);[740]
2. The Instruction on Ejection Upward (*gong du ’pho ba’i man ngag* / *’pho ba spyi brdol ma*)[741]

And two from Maitripa:

3. Collected Verses on Mahāmudrā (*phyag rgya chen po tshig bsdus pa*);[742]
4. The Instruction on Mental Understanding of the Intermediate State (*bar do blos chod kyi man ngag*).[743]

The texts are not presented in this order in the *gDams ngag mdzod*: 1 and 3 are the main texts (*gzhung*) and are placed first; they are followed by 2 and 4, their respective supplementary teachings (*lhan thabs*). The set of four was transmitted by Mar pa to mTshur ston, despite having been requested by Mi la ras pa who inquired about the existence in India of teachings that would lead to Buddhahood without training. Mar pa received them from Nāropa and Maitripa while he undertook his last journey to India. As they instructed him to keep them very preciously, he rolled them and wore them around his neck, not showing them to anyone. Upon his return, mTshur ston, who had served him extensively and had developed a strong

---

[736] DND, 8: 203-233. For an overview over the bKa’ brgyud section, see Kongtrül & Barron 2013, 94-100 (DND, 18: 449-453).

[737] *rJe btsun lho brag pa’i khyad par gyi gdams pa snyan gyi shog dril bzhi’i lo rgyus gzhung lhan thabs dang bcas pa.*

[738] Mei 2009, 29-40.

[739] “Lo rgyus.” In DND, 8: 204-209.

[740] DND, 8: 211-216

[741] DND, 8: 219-226.

[742] DND, 8: 216-219

[743] DND, 8: 226-233.

renunciation to *saṃsāra*, forcefully requested from him instructions that would be very effective with small effort. Here is what Mar pa thought:[744]

> "How could I offer such deep instructions to everyone when they have the seal of the guru? Yet, I intended to entrust them in a single lineage to my son Dar ma mdo sde, but he died and is no more. Mi la ras pa did not ask for them again, and there is no need for me to carry such deep instructions in the grave... The respect of this Lord mTsur ston is great; he relies on the mantra[yāna] teachings and is surely one who puts them into practice. If I don't give instructions to such a person, I would be stingy with the dharma and would commit the fault of obstructing the faithful!"

The account then distinguishes between two lineages, not as linear as the word "single lineage" would seem to imply. mTshur ston first taught the practice of ejection (text 2) to his brother, from whom a successive lineage of students with signs of realization ensued. He may of course have used other texts for his teaching on ejection, as well as oral instructions without a specific text attached, but this text is a testimony to the fact that mTshur ston indeed received the practice of ejection and was instrumental in its further propagation. As for the second lineage, a disciple of Ras chung pa, sNyag sgom dgos chung ba,[745] also requested the four scrolls as a whole from mTshur ston. The sealed lineage coming from him is as follows:

mTshur ston → sNyag sgom dgos chung ba → Dwags po mdo rtse → Nyi ma lung pa → sTod lung 'ga' ras → bDe gshegs rin po che Tog rtse sgang pa → author of the compilation.

In his index of the *gDams ngag mdzod*,[746] Kong sprul states that the lineage holder after bDe gshegs rin po che Tog rtse sgang pa is sNye mdo Kun dga' don grub (1268-1328), one of the masters of the Third Karma pa Rang byung rdo rje (1284-1339). He may be the author of this historical section. Prior to Kong sprul, the collection was compiled by Jo nang Kun dga' grol

---

[744] DND, 8: 206.

[745] He is called gShan sgom sGom chung in the index to the *gDams ngag mdzod* by Kong sprul (DND, 18: 496). The identity of this master is unclear. He may be the same as Yar lung pa sNyegs dmar po, who received Mar pa's tradition of the *Buddhakapālatantra* from 'Khon Gad pa kīrti (KGNDdkar chag, 28.7). Kun dga' grol mchog (DND, 18: 29) names this master "gNyags sgom" in his lineage prayer, but I am not sure whether the next name "dMar po" goes with "gNyags sgom" or with "mDung rtse," the next holder: *snyan gyi shog dril bzhi'i: rdo rje 'chang chen ḍā ki rus rgyan can, pen dha pa dang mar pa mtshur dbang de, gnyags sgom dmar po mdung rtse nyi ma lung, mgar ras rtse gang snye mdo g.yung ston pa*. One must note that according to this account, Mar pa received the four scrolls not from Nāropa and Maitripa, but from the *ḍākinī* Endowed with Human Bone Ornaments and Pendhapa. I have no explanation for this, except that it may be a mistake. In any case, in the account of the transmission by Kong sprul (DND, 8: 206-207; Mei 2009, 32-33), it appears that gNyag sgom did not initially receive all four original scrolls from mTshur ston. It was the *siddha* dBus ras who gave them to him later. He then gave the transmission to the next holder, Dwags po mdo rtse, but kept the scrolls for his son. Thus, it would seem that the transmission did not necessarily go along with the texts proper, and that the notion of "single sealed lineage" is elastic.

[746] DND, 18: 496.

mchog,[747] whose lineage of the text is the same until the next holder, Yung ston rDo rje dpal (1284-1365).

1.3.3. Mes ston Tshon po from gTsang rong

> To Metön Tsönpo of Tsangrong he gave instructions on luminosity, likened to a burning lamp that dispels darkness, as well as Nāropa's vajra, bell, hand drum, and skull cup lined with mother-of-pearls. Then he said: "Sever your ties during the intermediate state."[748]

Mes ston, the "western pillar," is often called "Mes ston tshon po," which may mean that he was fat.[749] His personal name was bSod nams rgyal mtshan. He was born near the actual rGyal rtse (Gyantsé), in gTsang, at a place called sTag tshal in M/Nyang ro/stod,[750] which was on Mar pa's route to and from Nepal. His residence was said to be at a place called Rong ba do.[751] It was there that he met Mar pa, received his teaching, and later taught.[752] He is said in some biographies to have provided Mar pa with three great offerings, hence he is called "the disciple who pleased him with his service."

Although this is not addressed directly in any of the sources, one can note a parallel between the status of rNgog Chos and that of Mes ston. Both are distinguished by the *Hevajra* transmission they received from Mar pa, and are said to make three great offerings to him. In a *Hevajra* commentary by Tshe'u ban de Dar re,[753] one finds a long narrative of how both Mes ston and Chos rdor came to lHo brag to receive Mar pa's teachings and how both invited him to visit their home. At one point, Mes ston dispatches two envoys from gTsang in order to invite Mar pa. When Chos rdor learns about it, he thinks that his parents are too old and unable to travel to gTsang, thus decides to invite Mar pa to gZhung. Mar pa considers the two opportunities, and declines Mes ston's invitation as Mes ston served him before and it is now rNgog's turn. This narrative may be an indication of the somewhat similar social status of Mes ston and rNgog, and the precedence of the former during Mar pa's life. For some reason, however, Mes ston's lineage was not as successful as rNgog's, and it was the latter's transmission that gained the largest following.

Mes ston received most of the tantras Mar pa brought from India, namely *Catuṣpīṭha*, *Cakrasaṃvara*, *Hevajra*, *Guhyasamāja* and *Mahāmāyā*. According to the *lHo rong chos*

---

[747] "Jo nang khrid brgya rtsa brgyad." In DND, 18: 304-315 for the *sNyan gyi shog dril bzhi*. (lineage: DND, 18: 29.) There is also a lineage prayer for the holders of this text in the *gSung 'bum* of 'Bri gung rig 'dzin Chos kyi grags (1595-1659): *Shog dril bzhi'i brgyud rim gsol 'debs*, DND, 14: 36.

[748] Tsangnyön 2010, 100-101.

[749] I summarize in this part the biographies of Mes ston found in *Deb dmar*, 78; *lHo rong chos 'byung*, 70-71; *Deb sngon*, 490-491, *Pad dkar chos 'byung*, 466-467.

[750] Myang ro in *Deb sngon*, Nyang stod in *Deb dmar*. See remarks about the name of that place in Sørensen & Hazod 2007, 2: 418.

[751] *Deb dmar*, 78; Pa do in *Deb sngon*, 490; Ba to in *lHo rong chos 'byung*, 70.

[752] See for instance Tsangnyön 1982, 131-136 for a narrative of Mar pa's teaching to Mes ston and two songs he sang while at Mes ston's place when returning to Tibet for the final tim.

[753] NKSB, 19: 28-29. See II.3.1.2. for more details.

'byung, he was a layman and had an accomplished familial lineage, from Mes Kun po to Jo mthong blo gros, despite the author of the *Deb ther dmar po* stating a century earlier that Mes ston had no hereditary descendants. All sources agree that his spiritual heir was Zhang bSod nams mkhar, who also studied with Mar pa and initiated a familial lineage, which is as follows:

Mes ston → Zhang bSod nams mkhar → bDe gshegs [Zhang] Ye shes snying po → Zhang ston Kun dga' grags → Zhang Bla ma rin chen → Zhang Shākya rgyal po → Zhang ston pa Grags 'byor.

None of the sources go further than Zhang ston pa Grags 'byor, mentioned by the *Deb ther dmar po* in 1346, and they do not specify what practice it was that these masters transmitted. We can guess from a commentary on the *Hevajratantra* published in the vol. 26 of the NKSB that it was for the *Hevajra* practice that Mes's tradition was famous. This volume contains two texts signed by a sKyas bande rGya mtsho grags. He identifies himself as Zhang Ye shes snying po's disciple in the *Hevajratantra* commentary.[754] The second text, a commentary on *Cakrasaṃvara*, although compiled by the same rGya mtsho grags, does not come from Mar pa and Mes's lineage but from Mar pa Do pa Chos kyi dbang phyug's.[755]

Another lineage of Mes's tradition of the Nine-deities *Hevajra* transmission is given in the KGND:[756]

Mar pa → Mes ston chen po bSod nams rgyal mtshan → Bla ston gSal 'od → Sher ston bSod nams bzang po → mDo sde dpal rgyal mtshan → O rgyan pa (1230-1312) → Karma pa Rang byung rdo rje (1284-1339) [who was the recipient of most traditions].

This lineage is also partially mentioned in the *lHo rong chos 'byung*, with what seems to be a direct link between Mes ston and Bla ston gsal 'od. This is doubtful, however, when one takes into consideration a lineage of transmission of *Hevajra* of the Ram tradition, where a Glan ston gsal 'od appears several generations after Ram, who was a disciple of rNgog Chos rdor. Is it possible that the erroneous presentation of the *lHo rong chos 'byung* and of Kong sprul's index comes from the colophon of Glan ston gsal 'od's disciple, Cher ston bSod nams bzang po. He was the author of a lengthy commentary on the *Hevajra*'s *Two Segments*, available in the NKSB,[757] in which he states that he wrote his commentary according to the teaching of Glan ston gSal 'od, who held the lineages of both Mes and rNgog gZhung pa, and that until

---

[754] "dPal dgyes pa rdo rje'i rgyud kyi 'grel pa yid bzhin nor bu." In NKSB, 26, 1-223. See 26: 3 for the lineage: Nāropa → Mar pa lHo brag pa → Mes ston tshon po → Zhang bSod nams mkhar → Zhang Ye shes snying po → sKyas Ban de rGya mtsho'i grags. This rGyam mtsho grags is also mentioned in the *Deb sngon*, 490, as one of the "many" members of that lineage who authored a commentary (no other name is given, though).

[755] "bCom ldan 'das dpal 'khor lo bde mchog gi gsal byed sgron me." In NKSB, 26: 225-333. Lineage on p. 230: Nāropa → Pham thing pa → Mar pa [Do pa] Chos kyi dbang phyug → dPal bDe mchog rdo rje → sKyas Ban de rGya mtsho'i grags. (Mar pa Do pa also received the transmission from Sumatikīrti who was the disciple of Manakaśri, one of Nāropa's four main disciples).

[756] KGNDdkar chag, 19-20.

[757] NKSB, vol. 25: *He badzra'i rnam par bshad pa gsal ba'i sgron me*.

that point, the transmission had been exclusively oral.[758] I believe that although no master is named in the oral transmission between Mes and Glan ston, there actually were, as evidenced by the gap in the dates of the masters of this lineage.[759]

The *Deb ther sngon po* also declares that Sangs rgyas ’bum (ca. 1170-1245), the seat-holder of Tshal Gung thang, held Mes’s tradition,[760] but does not specify from whom he received it.

Most mentions of Mes ston appear in relationship with his transmission of the *Hevajratantra*. In the *Deb ther sngon po* for instance, it is said that the first Karma pa, Dus gsum mkhyen pa (1110-1193), received *Hevajra* from a disciple of Mes ston called rKyang mo spang kha ba.[761] Another lineage went from Mes ston to ’Khon sGyi chu ba dGra lha ’bar (linked to the Sa skya lineage, as evidenced by his family name) and then on to Sa chen Kun dga’ snying po (1092-1158).[762] This means that Sa chen owned the two traditions of *Hevajra* famous in Tibet, that from Mar pa and that of the Sa skya lineage. According to Ngor chen Kun dga’ bzang po (1382-1456), however, Mar pa’s *Hevajra* tradition coming from Mes ston was later interrupted.[763]

Despite these scattered, passing mentions, there is little evidence of Mes’s role in the transmission of Mar pa’s teaching in Tibet.[764] This scarcity may explain why in gTsang smyon’s version of the *Life of Mar pa*, Mar pa insists on several occasions on the importance of Mes ston not being too restrictive with his teaching, a piece of advice supported by two songs addressed to Mes ston. It is difficult to assess the reliability of this declaration by gTsang smyon, as the songs do not figure in any previous biography; it is possible that gTsang smyon accessed some material from Mes’s tradition today unavailable.

One of the most lively accounts of Mes syon’s life regards his mastery of the practice of luminosity (*’od gsal*), which is done during deep sleep:[765]

> At a ritual for a deceased in Rong ngur smyig [a place in gTsang rong], [Mes ston] was drinking beer and kept sleeping. The house lord was not happy, and kept requesting him again and again to practice.

---

[758] NKSB, 25: 303. Although Cher ston is the author of the commentary, the manuscript from which it was reproduced is evidently more recent, as evidenced by the lineage indicated p. 305.

[759] For more details on Ram and Glan ston gsal ’od, see section II.1.3.3.

[760] See details about Sangs rgyas ’bum in Sørensen & Hazod 2007, 100.

[761] BA, 477, *Deb sngon*, 567.

[762] See Sobisch 2008, 46-47, n. 118.

[763] See *gSung ’bum* of A mes zhabs, 21: 13-14. Mentioned in Sobisch 2008, 47, n. 19.

[764] One finds Mes ston’s name in the transmission of the *Buddhakapālatantra* coming from Mar pa (KGNDdkar chag, 29.3). His name, however, seems to have been mistakenly written for that of mTshur ston, as evidenced by the fact that the next lineage holder is Ro mnyam rdo rje, mTshur ston’s disciple, and that Tāranātha’s account of the same lineage mentions mTshur ston and not Mes ston (see “dPal sangs rgyas thod pa’i dkyil ’khor gyi cho ga de kho na nyid gsal ba.” In Tāranātha’s *gSung ’bum*, 22: 237).

[765] *Rosary of Crystal Gems*, 72; see also *Pad dkar chos ’byung*, 466-467.

> "Hey you! This is not limited to here! Now in a village up, there is an old woman with her nose bleeding: she has just died and I guided her upwards!"
> They went to check and as it was like he said, all were confident. Later he said:
> "I will sleep twenty-two days. If I don't get up after that, burn my corpse!"
> Nineteen days later, a retreat attendant thought [Mes ston] could not rise so he moved him. A lot of blood came out of his nose and the glow of his body faded.

1.3.4. Mi la ras pa from Gung thang

> To [Mi la ras pa] he gave the exceptional instructions on yogic heat, likened to fire burning a pile of kindling, together with Maitrīpa's hat and Nāropa's garments. Then he said, "Wander among rocky mountain ranges and the snows, and gain experience in the view and in meditation."[766]

If the information on mTshur ston and Mes ston is scarce, it is the opposite for Mi la ras pa. It is not necessary to introduce here the life of Mi la ras pa, the disciple who pleased Mar pa with his devotion, as a great deal has been written on it elsewhere. For a summary of the scholarship on Mi la ras pa, one can refer to the recently published version of Andrew Quintman's thesis on "Mi la ras pa's Many Lives,"[767] and for an idea of the yogi's life, one can read Quintman's translation of gTsang smyon's version.[768] For gTsang smyon's reworking of previous material on Mi la ras pa's life, one can also refer to the published theses by Peter Alan Roberts and Stefan Larsson.[769] For our purpose, a summary of the perception of Mi la ras pa in the bKa' brgyud lineage and a short account of what Mi la ras pa is said to receive from Mar pa will suffice.

Biographies generally distinguish between Mi la ras pa, who transmitted Mar pa's lineage of practice (*sgrub brgyud*) and the other three main disciples, who continued his lineage of explanation (*bshad brgyud*).[770] This general distinction between two kinds of transmission alludes to the fact that Mi la ras pa is associated not with the transmission of tantric commentaries, but of key-instructions given by a master to his disciple with the purpose of helping him in meditation, and especially instructions and transmissions related to the *Cakrasaṃvaratantra*. As key-instructions are what Mar pa's transmission was famous for when compared to that of his fellow translators, and what the bKa' brgyud lineage became specialized in, Mi la ras pa came to represent over the years an epitome of the bKa' brgyud lineage. His name, associated with that of Mar pa and sGam po pa, has been shortened to refer to the common trunk of all bKa' brgyud lineages (*mar mi dwags gsum*); like many other great masters, he was called a "second Buddha," but unlike any other, he gave his name to many later yogis, who became known as "second Mi la ras pas." It is therefore quite evident that

---

[766] Tsangnyön 2010, 101.

[767] Quintman 2014, 11-17.

[768] Tsangnyön 2010.

[769] Roberts 2007 and Larsson 2012.

[770] See for instance the declaration of the *Deb dmar*, 75: *snga ma gsum ni bshad brgyud gtso/ phyi ma gcig pus grub brgyud gtso che'o.*

even though Mar pa's four main disciples are treated equally in Mar pa's biographies, Mi la ras pa's legacy far outweighs that of any other.

The transmission Mi la ras pa received from Mar pa is described as follows in the *Twelve Great Disciples*:[771]

> [Mar pa] imparted [to Mi la ras pa] the four symbolic empowerments of the Aural Tantra (*snyan rgyud brda'i dbang*), instructions on the key points of inner heat (*gtum mo gnad kyis man ngag*), the control of the life-force (*srog rtsol*), the merging and transference (*bsre 'pho*), the Aural Tantra's pith instructions (*snyan rgyud kyi man ngag*), practical instruction on the five stages (*rim lnga dmar khrid*), and so forth.

In the KGND, Mi la ras pa is essentially part of two major transmissions, the *maṇḍala*s of *Cakrasaṃvara* with five deities and of *Vajravārāhī* with five deities,[772] as well as several minor transmissions: the initiation of the protectors of the lineage of practice, the five sisters bKra shis Tshe ring ma;[773] the initiation of the long-life practice of Amitāyus;[774] and the authorizations for Mar pa's three special deities.[775] Another lineage in which he played a major and central role is that of the Aural Transmission (*snyan bgryud*).[776] He is also a major figure in the so-called "golden lineage" of the Karma bka' brgyud, that is to say the transmission of mahāmudrā.

Despite this central role in the bKa' brgyud lineages' history, Mi la ras pa did not spend a very long time with Mar pa, only five years according to sGam po pa, six years and eleven months according to Don mo ri pa. If he was considered *a posteriori* Mar pa's foremost disciple, the question remains open as to whether he was perceived in the same way during Mar pa's lifetime. Here, we touch the subject of the difference between the way religious masters are perceived during their lives and what they become once their disciples run a successful lineage. Hence *in fine* this is the problem of the diachronic reception of lineages and of the way a series of individuals become one lineage, the fame of the early ones being reassessed under the light of the later ones. As Mar pa's biographies do not predate Mi la ras pa's, and as neither were composed during Mar pa's or Mi la ras pa's lifetimes, this question may remain open forever. It can only be remarked that in Mar pa's biographies, Mi la ras pa is just one of his main disciples. As the four-pillar metaphor clearly demonstrates, he does not surpass others in the master's eye. Unlike the sun and moon image for Mi la ras pa's disciples sGam po pa and Ras chung pa, with the sun somehow eclipsing the moon, there is no pillar higher than another, no animal mightier than another, no transmission loftier than another. In fact, if one strictly considers Mar pa's biographies, the disciple who was his closest life-long companion was Mar pa mGo yag. One reason for the relative silence about Mi la ras pa in

---

[771] Newark manuscript of the *Bu chen bcu gnyis*, 10a, Quintman 2006, 310.

[772] KGNDdkar chag, 26-27.

[773] KGNDdkar chag, 43.

[774] KGNDdkar chag, 16.

[775] KGNDdkar chag, 17.

[776] Sernesi 2007 and 2011.

Mar pa's life story is that many biographies were conceived in the framework of rosaries of lives, with Mi la ras pa's life following Mar pa's, making information about Mi la ras pa redundant in Mar pa's life. Yet, even in Mi la ras pa's biography–and this is the major trope of the narrative–Mi la ras pa does not receive Mar pa's teaching for a long time; he witnesses Mar pa's other disciples attend his empowerments and explanation while he is kept away to build a tower. He even spends a long time at rNgog's home in gZhung in order to receive from Chos rdor what he cannot obtain from Mar pa.

What we can deduce from this is that Mi la ras pa spread a specific kind of practice taught by Mar pa, based on key instructions and intensive retreats. This style eventually became central in the bKa' brgyud lineage, and Mi la ras pa came to be, more than anyone else, a figure to emulate. Although Mi la ras pa is said to have been predicted by Nāropa early on in the tradition,[777] this prediction is mentioned in neither sGam po pa's version nor the *Twelve Great Disciples*. It is only in gTsang smyon's famous verse of prediction by Nāropa that Mi la ras pa reached such a unique status that Nāropa and all the trees of his hermitage bow to him.[778] Before that, and at Mar pa's time, for what we know, he may have been the default recipient of a single lineage of esoteric instructions Mar pa had marked out for his son, had he not lost his life. Anyway, the success of his meditative practice, the quality of his songs, the blossoming of his disciples' lineages, and their strong tradition of writing hagiography,[779] coupled with a prestigious transmission coming from India, transformed him into one of Tibet's most well-known yogi.

1.3.5. Mar pa mGo yag

Mar pa mGo yag is not part of the group of the four main disciples called "pillars," yet he was in many respects a major student of Mar pa's, and as such belongs to other groupings of importance, such as the "four fortunate disciples" (*las can gyi slob ma bzhi*),[780] the "ten great disciples" (*bu chen bcu*),[781] or the "heart sons" (*thugs kyi sras*).[782] The reason why the four pillars–also called "dharma sons" (*chos kyi sras*) and "heart sons" (*thugs kyi sras*)–are generally considered paramount is that these four are the ones who continued Mar pa's transmission via their own lineage. Although Mar pa mGo yag, unlike the four pillars, did not found a lineage, he received the Aural Transmission from Mar pa and gave it to rNam rdzong ston pa, and he probably received all other transmissions as well, although his disciples are not known.

---

[777] See the opening of Mi la ras pa's life in the *lHo rong chos 'byung*: *de rnams kyi nang nas mchog tu gyur pa dpal ldan nā ro pas lung bstan cing…* "The supreme one among them, predicted by Nāropa…"

[778] See the passage in Tsangnyön 2010, 94, and the description of gTsang smyon's dream in Quintman 2014, 126-127.

[779] On the Aural Transmission specific tradition of writing biographies, see Sernesi 2010, 404-408; Ducher 2017, 36-38.

[780] Glangs lHa gzigs Ras pa's *Chos 'byung mig 'byed 'od stong* (Sørensen 2007) and the *lHo rong chos 'byung*.

[781] Don mo ri pa's and mKha' spyod dbang po's golden rosaries, *Deb sngon*.

[782] *Deb dmar*.

The name of Mar pa mGo yag varies from one biography to another. He is sometimes called Mar pa mGo yag or mGo yags,[783] sometimes Mar pa mGo legs or ’Go legs,[784] or even both.[785] It would seem that the two names are synonymous (*mgo legs* and *mgo yag* both mean “good beginning”) and exchangeable, hence refering to the same disciple. Nevertheless, a 17th-century *thang ka* representing the third Dpa’ bo, gTsug lag rgya mtsho (1567/8-1633), shows two distinct characters whose incarnation he is meant to be, the one on the left bearing the name Mar pa mGo yags, and the one on the right Mar pa mGo legs.[786] Despite that representation that would seem to imply two different persons, it seems undeniable in Mar pa’s biographies that the two names refer to the activities of a single person; in the lists of disciples one never finds both mGo legs and mGo yags. As for his name “Mar pa,” despite the *Deb ther sngon po*’s declaration that the translator and mGo yag were from the same family, I do not find any evidence to support this, in particular as “Mar pa” seems to have been a widespread name (cf. the translator Mar pa Do pa Chos kyi dbang phyug, or another disciple of Mar pa called Mar pa Bya ze).

Most golden rosaries and dharma histories, except the *lHo rong chos ’byung*,[787] do not detail mGo yag’s life, but he is very often pictured in Mar pa’s biographies, as he was among the first to meet Mar pa and became a lifelong attendant and sponsor. He is said to come from ’Dam or Byang, an area north of lHa sa and south of the gNyan chen thang lha range; rNam rdzong ston pa says in his biography of Mar pa that he comes from ’Phen yul, which is the region just south of that area. In some biographies, he is said to come more specifically from Tsam klung (or Tsam lung), supposedly in ’Dam.[788] Mar pa met him when he went north, to a recently discovered goldmine, in order to gather funds for his trip to India. mGo yag was from a rich family and offered a lot of gold to Mar pa, thus making it possible for him to return to India. When Mar pa came back to Tibet, he was welcome at Mang yul (the border between Nepal and Tibet) by mGo yag who was worried about his master. At that time, Mar pa gave him Nāropa’s rosary and Maitripa’s vajra and bell, as well as some vajra songs on the six doctrines and sealed instructions.[789] mGo yag then accompanied Mar pa in his travels through Tibet and to his seat in lHo brag. He was considered a loyal disciple most pleasing to his master, having given birth to profound experiences and realization.

---

[783] For instance, in Mar pa’s biographies, in sGam po pa, KSTC-2, KSTC.sum.1, MKNT, “U rgyan pa,” Rgyal thang pa, Mkha’ spyod dbang po, *lHo rong chos ’byung*, *Deb sngon*… (see references in Ducher 2017).

[784] Bla ma Zhang, Don mo ri pa, KSTC-1, KSTC.sum.3, *Deb dmar*, gTsang smyon, Kaḥ thog pa…

[785] rNam rdzong ston pa, dPa’ bo II; the former sometimes changed names from one sentence to the next.

[786] See http://www.himalayanart.org/image.cfm/825.html. Many things are strange in that painting, and according to Jeff Watt (on the website as well as in personal communication, October 2014), it may well be that the master is not the third dPa’ bo and that the inscriptions are therefore mistaken. I did not find any link between mGo yag and the third dPa’ bo justifying that representation, or any hint that the dPa’ bo incarnations are rebirths of mGo yag.

[787] *lHo rong chos ’byung*, 71-72.

[788] In mDo sde’s biography (MKNT, 170), the *lHo rong chos ’byung*, 71 and the *Deb sngon*, 485 for instance. His disciple, rNam rdzong ston pa, who comes from La stod lho (near the Nepalese border) is also said to come from Tsam klung, so there may either be several places with that name or an error (see “ngam rdzong ras pa’i rnam thar don bdun.” In: DK-DZO. Vol 63, p.153).

[789] MKNT, 183-184.

In the colophon to rNam rdzong ston pa's biography of Mar pa, it is stated:[790]

> These songs and story of Mar pa were given to the lord [Mi la]ras pa and to the 'Phan yul master [Mar pa Mgo legs] but to none other. I, the lay Tibetan Bodhirāja, have long remained at the lotus feet of these two venerable ones and have well pleased them.

gTsang smyon He ru ka repeats this in his own colophon:[791]

> Thus, this hagiography of the Venerable Mar ston Chos kyi blo gros, [called] Meaningful to Behold, was transmitted orally and in detail to Ngam rdzong ston pa by the Venerable Mi la and Mar pa mGo legs.

It seems therefore that mGo yag played a crucial role in the diffusion of his master's biography as the recipient of many of his songs and as the first narrator of his life.[792] Mar pa mGo yag also played a great role in the spread of Mar pa's collection of teachings called the *Sras mkhar ma*.[793] According to an inventory said to be by Mar pa, scrolls of teachings on the six doctrines and on the main transmissions of the Aural Transmission were copied several times by mGo yag at Mar pa's demand, and subsequently concealed in the walls of Mar pa's house, called Sras mkhar. Gu ru Chos dbang (1212-1270) retrieved them in the mid-13th century and later spread them in Tibet. According to this story and to Mar pa's biographies, the picture we get of mGo yag is that of a faithful attendant who stayed with his master as much as his could, devoting most of his time to serve him.

The *lHo rong chos 'byung* contains further information about mGo yag's remains:[794] after his passing, relics from his body were enshrined in a stūpa in the low 'Ba' rom, an area in the Nag chu province (at the northern end of the gNyan chen thang lha range). Although it is not stated, it is likely that this refers to the 'Ba' rom Ri bo che Monastery. Later, the remains were offered to the Karma pa and mixed with seven-rebirth pills; they were distributed and benefitted beings greatly. Nāropa's rosary was placed inside the statue of the Jo bo (in lHa sa?) by the sixth 'Ba' rom abbot, gZhon nu shes rab. Maitripa's ring was kept together with the body. Later it was given to Tsong kha pa, who offered it to the monastery of gDan sa mthil.[795]

---

[790] Mon rtse pa, 103.

[791] gTsang smyon, 224.

[792] In for instance the mDo chen bka' brgyud golden rosary (*Bka' brgyud kyi rnam thar thog mar rdo rje 'chang gi rnam thar na rim par bzhugs so*, W21237, ff. 43a-47b) and the *Rwa lung bka' brgyud* golden rosary (W19222, vol. 1, 138-165), many details about the way he served Mar pa are given.

[793] See Ducher 2016a for details on this collection, its history and its status as a treasure.

[794] *lHo rong chos 'byung*, 71-72.

[795] No information on this is provided in Czaja 2013.

Bone ancestors

Spelling according to ST1

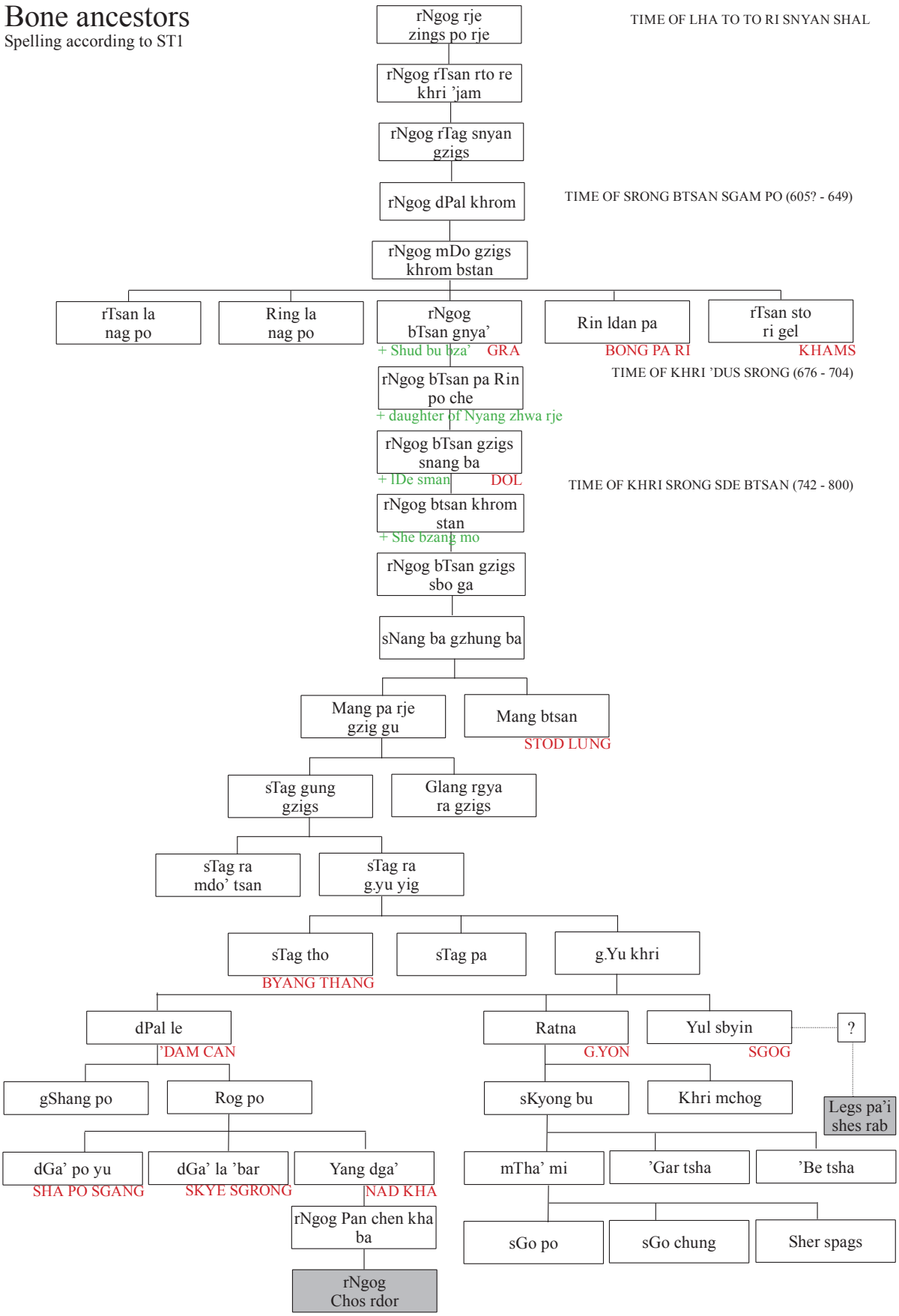

(previous page) Plate 11: Bone ancestors according to ST1

CHAPTER TWO: Bone Ancestors and Related Families

2.1. Bone Ancestors: pre-11th century history of the clan

Close to 13% of ST1 and ST2 is devoted to a genealogy of rNgog Chos rdor's ancestors, a part completely absent from ST3 and all other religious histories, although they sometimes demonstrate a knowledge of this genealogy. Its presence in the *Rosaries* shows the familial character of these two texts, which are at the crossroads of the genres of hagiography, record of teachings received and genealogy. The syle of this part is very different from Mar pa's biography that precedes it and and the rNgog hagiographies and lists of teachings received that follow it. It uses the terminology typical of the Tibetan Empire and the first spread of the doctrine in Tibet and is likely based on a source that traces back to that period, at least partially. A complete study of this specific narrative may benefit from a wider contextualizing into that period, and a precise knowledge of the concepts involved. This however exceeds the ambition of this dissertation that considers the religious perspective of the rNgog family and its history from the 11th century onwards. The history of the bone ancestors of the rNgog family is therefore limited to a basic understanding of the text, with some reference to sources that might enlighten its meaning.

Origin of the first ancestor

> rNgog's ancestor was one called rNgog rje Zings po rje (who was contemporary with lHa to to ri snyan shal). He came from the gods (Enjoying Manifestations) from above and descended on earth by stepping on a miraculous nine-level ladder (with the intention to benefit beings) and landed (in a province of the Snowy Land called g.Ya' ltum po.) From among the four original clans, he belonged to the sTong. Out of the nine clan groups which are its (subdivision), he was from the rNgog rje. (Further clan subdivisions from the rNgog are: sGro gnya', rMa, rKa ba, Gan, Lang pad, Dar, Lang 'gro, Bya rje, and sNyang rje.)

The first ancestor mentioned is called rNgog rje Zings po rje. In an image reminiscent of the founding myth of the Tibetan imperial dynasty, he is said to have descended from the god realm on a nine-rung ladder[796] and to have landed at a place called g.Ya' ltum po, or g.Ya' zlum po in ST2. This place is unidentified, but it may be an area to the east of the g.Yo ru, known by the name rNgegs or rNgog. According to Erik Haarh, this was one of the twelve

[796] See Zeisler 2011, 123-124, for remarks on this ladder, called *dbus skas steng dgu'* in the *Old Tibetan Chronicles* (PT 1287).

rgyal khran, small kingdoms that were incorporated in the Tibetan Kingdom created by Srong btsan sgam po.[797]

This ancestor is said to arrive at the time of the 28th King of Tibet, lHa tho tho ri snyan shal (generally called lHa tho tho ri gnyan btsan), that is to say approximately in the 4th-5th century A.D.[798] This narrative thus mixes the founding myth of the dynasty, at the time of the first king gNya' khri btsan po, and the myth surrounding the first apparition of Buddhism at the time of lHa tho tho ri snyan shal, when Buddhist texts fell on the royal palace. The name of the ancestor, Zings po rje, resounds with yet another narrative, that of the fight of lHa tho tho ri's grandson, sTag ri snyan gzigs, with two of his enemies, Zing po rje Khri Pangs sum and Zing po rje sTag skya bo,[799] alluding to the fact that the term *zings po rje* might be a title.

The rNgog clan is said to be one of the four original tribes of Tibet, the sTong.[800] According to Gene Smith's outine of the 15th century *bShad mdzod yid bzhin nor bu*,[801] the sTong are divided into four groups of two, thus making eight sub-groups, instead of the nine mentioned in the *Rosaries*. According to the encyclopedia quoted by Smith, one of the four, the rJe cig rTsang rje Thod dkar rje, is divided into sNgog (or rNgog/rNgegs) and Khrog. The name rJe cig rtsang rje thod dkar rje probably explains the alternative name given to the first individual of that clan in ST2, rNgog rje gtsang rje. According to ST1, the rNgog clan is further divided into nine sub-clans, but this information is not repeated in ST2.

> The son born from rNgog of the sTong group was rNgog Tsan rto re khris 'jam. His son was rNgog rTag snyan gzigs. He was appointed as an officer (*dpon*) at the frontier. As everyone was following him, he developed [his possessions] by touring the land of Tajikistan. He was pleased by great donations such as a throne with an iron mechanism (*dkyil 'khor)*, a *rnge rngog* (?) with a silken back curtain, a silver bird (*dngul bya*) with sun ornaments, a silver saddle with a golden armor, as well as gold, turquoise, brocades, pearls, precious stones and so on. He was bestowed a great insignia with golden letters.[802]

rNgog Zings po rje had a son, Tsan rto re khris 'jam (Tsan to ri khri 'dzam in ST2), about whom nothing is known. The name of his son, rNgog rtag snyan gzigs (rNgog rta dgu snyan gzigs in ST2), is evocative of that of lHa tho tho ri snyan shal's grandson, sTag ri snyan

---

[797] Haarh 1969, 240-243. See also Van der Kuijp 1983, 269, n. 75. For a map of the twelve *rgyal phran*, see Dotson 2009, 171.

[798] Sørensen 1991, 70, indicates that "the king lHa Tho-tho-ri gnyan shal, the first "Buddhist" king in the pre-historic line and variously listed as the twenty-sixth to the twenty-eighth king, constitutes the turning-point between a pre-Buddhist strata of kings divided into more or less well defined groups and a remaining pre-historic Buddhist lineage, usually numbering four kings." See also Sørensen 1994, 150-151.

[799] The narrative of their fight appears in PT 1287. See an analysis in MacDonald, 233-236.

[800] Stein 1959, 41-45.

[801] Smith 2001, 219.

[802] ST1, 3.6-7; ST2, 27.8-28.2.

gzigs.[803] As was remarked in the previous paragraph, this may be an indication that the authors of the *Rosaries* reconstructed the rNgog genealogy on the basis of a family document as well as on general histories of the Empire. rNgog rtag snyan gzigs was appointed as an officer (*dpon*) in *lHo bal*. This term may refer to Nepal, but according to Hugh Richardson, in early histories it rather points to the land of barbarians, or to people living at the frontier.[804] This is possible as next are mentioned his travels in Tajikistan (*stag gzigs*), where he gathers a large quantity of goods. The career of this officer seems to have been successful as he is said to receive a golden insignia.[805]

> His son rNgog dPal khrom lived at Srong btsan sgam po's time. [At that time], Thon mi sam bho ta and others brought from India the knowledge of miraculous letters. It was handed over to the king and taught to ministers,[806] children and commoners. Having held major and minor councils, the wise established measures like *bre* [4] and *phul*, *srang* and *zho*.[807] Agricultural lands were divided into military and civilian districts,[808] horns and thousand-districts.[809] One chiliarque[810] was 'Chims, and his representative was rNgog dPal khrom.[811] Also, at the time of Emperor Srong btsan sgam po and rNgog dPal khrom, rNgog was praised for [establishing rules] in case of theft or murder: for theft, there was a rule of six [times the value] of the wanted good.[812] For murder, there was a price of 21.000.[813] He was praised as men had golden horses with turquoise saddles, stirrups made of gilded silver[814] and halters made of pure

---

[803] Sørensen 1994, 151-153.

[804] See "Bal-po and Lho-bal" in Richardson 1998, 102-105.

[805] The tradition of insignias (*yig tshang* or *yi ge*) and the use of metaphors to describe them is explained in Stein 2010 (1984).

[806] For the translation of *zhang slon* as "minister," i.e. *zhang* as a simple honorific, see Dotson 2004, 79-80.

[807] ST1, 3.8, reads: ***'dun sa*** *che chung gi* ***g****zhi bzung nas/* ***'****dzangs kyi bre dang phul du phyung/* […] ST2, 28.3 has: ***m****dun* ***pa*** *che chung gi* ***b****zhi bzung nas/* ***m****dzangs kyi bre dang phul du phyung/* I edit *'dun sa* to read *'dun ma* "political council," and *'dzangs kyi* to read *mdzangs kyis*, i.e. "wise ones." One *bre* equals six *phul*; this is a measure for grain, etc. One *srang* equals ten *zho*; this is a measure for gold, silver, etc. The second set does not appear in ST2.

[808] There is an opposition between agricultural land (*bod rnams*) and pastures (*brog*). The former are divided into military (*rgod kyi stong sde*) and civilian districts (*g.yung gi mi sde*). The terms used in the *Rosaries* are *yul* and *sgo*. See Uray 1971.

[809] See Uray/Uebach 1990. See also the glossary of Dotson 2007, 257-61. Read *ru* and *stong sde* instead of *rus* and *stong lde* (ST1, 4.1).

[810] i.e. the head of one thousand-district.

[811] *stong dpon* and *stong tshab*. This thousand-district may be located in Eastern Lho ka: Dotson 2007, 176 (map by Guntram Hazod), gives the name of two neighbouring territories called rNgegs and mChims.

[812] *Drug khris* is edited to read *drug khrim*.

[813] In Tibetan law, the penalty on theft or murder was settled with money (as well as other physical punishment). In Sørensen 1994, 182, and Dotson 2006, 224-226 (blood money) and 335-337 (theft), the amounts to be paid differ, but as these authors indicate, there are great differences between the various sources.

[814] *phra men*, see e.g. Stein 2010, 229. Dotson 2006, 417, translates this as gold-plated silver.

lapis.[815] He was praised as women had conch-white *dzomo*, with nose-rings made of gold and nose-ropes made of silk, carrying loads of *kesi*[816] and brocades.[817] As he was the *mantrin* of the Emperor's body, he was given a golden scepter[818] of an arrow's length.[819]

rNgog dPal khrom lived during the reign of Srong btan sgam po (604-649/650, ruled from 617), which marks the beginning of the historical period of the Tibetan Empire. His life-story starts with a general description of the political and cultural innovations of the period, such as the invention of writing, the establishment of measures, the divisions of the land, etc. rNgog dPal khrom may have played a role in the enactment of the law, maybe as an official, possibly a priest (he is called a *rgyal po'i sku'i sngags mkhan*). The reason for this passage is altogether not clear and seems to be a patching of the changes known to have happened at that period. It is doubtful that rNgog dPal khrom played a major role as his name does not appear in scriptural sources, but he may have been part of the aristocracy that enacted the King's rules, and thus participated in the general increase in wealth of the Empire.

The son of rNgog Khrom was rNgog mDo gzigs khrom stan. He took up the work of his grandfather as an officer in the border region and became perfectly wise. He had five sons: rTsan la nag po, Ring la nag po, bTsan gnya', Rin ldan pa (who settled [at a place] called Bong ba ri), and rTsan sto ri gel (who settled in Khams).[820] rTsan la nag po conquered the kingdom of Tajiks, Ring la nag po conquered the kingdom of Mongols, Rin ldan po lifted the burden of an elephant. rTsan sto ri gel was a great high minister of the Emperor and was bestowed a golden insignia inlaid with turquoise. During the conquests of the emperor, the Kingdom of the Turks was tamed and the four great garrisons fell, retreating in front of the warriors. [rTsan sto ri gel?] was awarded the insignia

---

[815] I read *mthing zhun* for *'thing shun*.

[816] See Watt and Wardwell 1997, 53ff. This catalogue of an exhibition at the Metropolitan Museum of Art in New York devoted to luxury silks and embroideries produced in Central Asia and China from the eighth to the early fifteenth century mentions a silk tapestry–a brocade made of silk and sometimes gold–called *kesi*, which might be the term referred to by the Tibetan *gu zu*. Although *kesi* generally date from the 11th to the 14th century, they come from a long tradition of *kesi* weaving among the Uyghur peoples of Central Asia.

[817] This sentence and the preceding are not altogether clear. They may allude to the fact that through rNgog skills, the population became wealthy, and hence he was praised as men could afford golden horses, women pure white *dzomo*s, etc.

[818] *phyags shing*. This is a ritual object used by *bon po* practitioners.

[819] ST1, 3.7-4.3*;* ST2, 28.2-6.

[820] ST2, 28.7, adds the order of birth of these sons: Ri la nag po (second), Tsan dha nag po (first), bTsan gnya' (middling of five), Ri ldan po (who settled somewhere called Bong nga ri), and Tsan dho ri gel (who settled in Khams). The meaning of *chad* in the notes regarding Ri ldan pa and bTsan sto ri gel is not clear. I tentatively translate it as "settle," but it may also refer to the fact that they died without offspring, hence that their line was "interrupted"?

> of the mixture of leopard and tiger, and granted in particular the limbs of a snow lion.[821]

In the next generation, rNgog mDo gzigs khrom stan took up the work of his grandfather, rNgog rtag snyan gzigs, as an officer at the border. He had five sons who all seem to have worked as officials or as soldiers in the army during the conquests of the Tibetan Empire during the reign of Mang slon mang rtsan (r. 649-676) and his powerful minister mGar stong rtsan.[822] This was the period when the ’A zha Kingdom, a buffer state between China and Tibet inhabited by a Turkic people, was defeated (in 663). By 670, the Four Garrisons of Anxi, in the Tarim Basin, fell into Tibetan hands.

Among the five brothers, the name of rNgog Ring po la nag po appears in the 14th-century *rGyal rabs gsal ba’i me long* as one able to lift an elephant—that is to say that he was very powerful—a role attributed to Rin ldan po in the *Rosaries*.[823] This brother lived in the late 7th century, at the period of Mang slon mang rtsan’s son, Khri ’Dus srong (676-704). Another brother is rTsan sto ri gel, who is said to be a “great high minister” (*gung blon chen po*).[824] Unlike his brothers who are associated with other regions, he may have been part of the victorious army that invaded the city-states of the Silk Road, where he gained an important position. The most successful and famous of the five brothers—the one who gave rise to Chos rdor’s line—was the third one, rNgog gTsan gnya’, whose achievments are described in the next part of the text. As he is one of the five brothers, however, it is unlikely that he lived at Khri srong sde btsan’s time, as claimed. It was another rNgog, bTsan gzigs snang ba, the grandson of gTsan gnya’, who met Khri srong lde btsan. It is therefore likely that the five brothers lived at the time of Khri ’Dus srong and his son, Khri Lde gtsug brtsan (704-754).

> The middle son was rNgog bTsan gnya’. When the Emperor Khri srong sde btsan came to power (756), he reached his thirteenth year. He became his father’s temple attendant and went in the presence of the Lord.[825] When first reaching there, he passed muster and became a guardian of the inner door.[826] In his fourteenth year, he was made a night-watchman during the Chinese-Tibetan fights. In his fifteenth year, he made the offerings to Nam ral and was the officer taking care of the temple, and so on. In his sixteenth year, the six Chinese frontiers were tamed.[827] When the army was led against the Chinese,

---

[821] ST1, 4.3-6; ST2, 28.6-29.1.

[822] For details on that period see e.g. Beckwith 1987, 30-34, Dotson 2009, 18.

[823] Sørensen 1994, 349: “rNgog-ring-po-la-nag-po [was capable] of lifting [high] an elephant. rNgog-gling-khams was [capable of] lifting up a three-years old (*grus po che*) *g.yag*-ox.”

[824] For this title see e.g. Haarh 1969, 165 and Dotson 2006, 223-224.

[825] The person meant is not clear. ST1 has *rje blon*, ST2 has *rje btsun*.

[826] This sentence is unclear to me. ST1 has *nang ’khor*, which may mean domenstic attendants, and ST2 has *nang sgo*, which may refer to the inner door of a sanctum. The next words, *shan thogs*, are also unclear.

[827] *mtha’i rgya drug*: my translation as the “six Chinese frontiers” is uncertain. According to Dotson 2006, 69, this refers to the Chinese and Turks (*gru gu*) at the frontier. According to Sørensen 1994, 153, this may have happened at the time of gNas ri srong btsan (6th-7th century), who was the king preceding Srong btsan sgam po.

30.000 Tibetan soldiers were deployed. The army crossed the pass of Gong bu me ru.[828] [5] The army went down to the plain and the Lord, ministers and their suite, altogether thirty-six people, remained in the back to take care of the Lord. rNgog protected the Lord and his thirty people [against] three Chinese officers and a unit of ten powerful soldiers.[829] All the entourage was loyal[830] as he did not care for his own life, so his power was great. He cut the throat of the Chinese officers and enslaved the Chinese. He smashed Chinese children on rocks. He moved amidst thousands of Chinese dogs.[831] He swallowed Chinese curd.[832] He jailed Chinese women. Thus was he victorious over the Chinese. At that time, rNgog gTsan g.nya' was the bravest among 900 [men]. After that, he hung the officers' head on horses' tails and turned [the Chinese] upside down in the palm of his hand. He took the fort of Kwa chu and cut the iron bridge of 'Bum gling, with the 900 [people] under his command. He offered [to the Emperor] gold, turquoise and silk that were loaded on mules and horses. At that time, all desirable pleasures were bestowed on rNgog bTsan gnya' and his entourage of 936 [people]. In particular, rNgog [gTsan] gnya' was given the hide[833] of three tigers and the mane[834] of a snow lion. Having been granted a golden inlaid insignia, he had a land with hundred plowing fields[835] in Yid dgu in the Gra [valley].[836] He had twenty households as his subjects, such as the Bran bzi, 'Or brgyad, Chu mi, Kha gze and so on. He took Shud bu bza' as his wife.[837]

The part on rNgog gTsan gnya' is difficult to understand, and my translation is uncertain at places. What transpires is that rNgog gTsan gnya' started as a young man to work as a temple attendant, and went on to work in the entourage of a lord, whose name is not given, but is probably not the Emperor himself. In a dangerous situation where the Lord and members of his retinue were embushed by a Chinese unit while the Tibetan army was in the vanguard,

---

[828] See Uebach 1991, 516-522, for a discussion of the uncertain location of Gong bu me ru, at the frontier between Tibet and China. Pillars were set up there in conjunction with the treaties signed between Chinese and Tibetans in 730-734 and 821-823. The word *tra ma* may be translated as "army," as argued in Uray 1962 for the term *dra ma drangs*.

[829] This is unclear. It is translated here according to ST2, 29.4, where it is quite different, probably as the meaning in ST1 was also quite dim to ST2's author.

[830] Translation of *blo ba nye* as in Dotson 2009, 260.

[831] This is unclear: *rgya khyi stong la rgyus*. It may refer to the fact that the Chinese are completely overpowered and are like "Chinese dogs," i.e. small dogs (Shih tzu, Pekingese) when compared to great Tibetan Mastiffs?

[832] Litt. "Chinese yogurt" (*rgya zho*). This may refer to their brain.

[833] ST1: *glag pa*; ST2: *blag pa* < *lpags pa*?

[834] Dotson 2006, 121, for translating *seng ge dkar mo gong glag* as the "white lion coat," with *gong glag* referring especially to the lion's mane.

[835] The *dor* is a measure for fields, defined as that which can be plowed in one day by two bulls (*rGya bod tshig mdzod*, p. 1309). Taenzer 2012, 397-398, says this equals the Chinese *tu*.

[836] This is a valley adjacent to the gZhung valley in Central Tibet.

[837] ST1, 4.6-5.5; ST2, 29.1-8.

rNgog led the defense and crushed the Chinese attack. After this feat, he commanded a regiment of more than 900 faithful men that led successful battles in the North-East of Tibet, at the border between Tibet and China. Two places in particular are mentioned, the fort of Kwa chu and the iron bridge of ’Bum gling. According to Bianca Horlemann’s study of the “Buddhist Sites in A mdo and Former Longyou from the 8th to the 13th Century,” the former may refer to Guazhou in the Gansu province, located right to the east of Dunhuang.[838] The latter may be a place where there was Buddhist caves since at least the 5th century, in the modern Lanzhou province (Byams pa ’bum gling, modern Binglingsi).[839] It may also be the Hongji bridge spanning the Yellow River.[840] However that may be, these are place to the north of A mdo, on the Silk Road, an area of intense warring activity in the late 7th-early 8th century. rNgog’s regiment seemed to have led successful battles and obtained a sizeable loot. With an insignia, he was awarded some land in Central Tibet (in the Gra valley, to the east of gZhung), where he ruled over twenty household.

A “Great rNgog” with a similar lifestory is also mentioned by ’Gos Lo tsā ba in the *Deb ther sngon po*:[841]

> The religious king Khri srong lde btsan had a minister, rNgog, the Great, by name. When the king led an army towards China, he pitched his camp on the top of a small hill. When the troops moved off to conquer other regions, some Chinese warriors came to attack and rushed towards the king. rNgog then killed some of them and some fled away. It was then that a new proverb came into being: ‘Chinese curds (means brain) were swallowed, and Chinese youths were smashed against the rock.’”

The story is very close to that found in the *Rosaries*, except that it is used to introduce the life of rNgog Legs pa’i shes rab and not that of Chos rdor. This “Great rNgog,” arguably rNgog bTsan gnya’, was therefore a common ancestor of rNgog Chos rdor and rNgog Legs pa’i shes rab,[842] and it is likely that there used to be a genealogy of Leg’s pa’i shes rab’s line with a narrative ressembling the one translated above, including the error about Khri srong sde btsan. It is also possible that ’Gos Lo tsā ba used the narrative of the *Rosaries* to fill in the other branch’s genealogy.

> [rNgog gTsan gnya’s] son was rNgog brTsan pa Rin po che (who settled in rNam thang). He was betrothed to the girl ’Phyims g.Yu ber. He divided the land at Grib near lHa sa into hundred plowing fields and had twenty households as his subjects, such as the Klog skya, Thod pa, and Tsi mi. He took as his wife the daughter of Nyang zhwa rje.

---

[838] Horlemann 2012, 135.

[839] *Ibid.*, 128.

[840] Dotson 2009, 132, n. 358.

[841] *Deb sngon*, 1: 391-2; BA, 324. See references to this narrative in Van der Kuijp 1983, 29, and 269, n. 75-76.

[842] See II.2.2 for details.

> His son was rNgog bTsan gzigs snang ba. He was betrothed to the girl sBas che btsan. He divided the land in Lower Dol into three hundred plowing fields and had forty households as his subjects, such as the Li, Bya, Rang ’gro, Rang rta, and Blo bo. He defined the tax-paying passes, the nomadic paths and the limits of the territory. The Blo bo built the Zangs Fort in the Zangs ril plain and had the authority over both the water and horses. [rNgog bTsan gzigs snang ba] took as lDe sman bza’ as his wife. When the king Khri Srong lde btsan entered the faith, he offered to him a turquoise stūpa with a crystal dome while at the hut of the Rin po che from ’Ching bu Nam ral. He converted to Buddhism and was bestowed the great golden insignia. He became a holder of the tantras, reading transmissions and key instructions concerning the three precious Dharma Baskets. [6] He granted an empowerment to the Vajra King and became a great mantrin of the Sovereign.

Not much is known about rNgog brTsan pa Rin po che. He settled in a place either called rNam thang or sNang thang. This may be another name for the Grib area to the north of lHa sa where he had twenty households under his authority. He married the daughter of another lord with whom he had a son called rNgog btsan gzigs snang ba.

rNgog bTsan gzigs snang ba was the first Buddhist of the family line. He lived at the time of Khri Srong lde btsan and met him after the Emperor converted the country to Buddhism in 779. Although he too was a lord with land in the Dol valley and forty household under his authority, he became very learned in the various aspects of Buddhism, gave an empowerment to the King (*rdo rje rgyal po?*) and became a tantrist (*sngags mkhan chen po*) at the court.

> His son rNgog gTsan gzigs khrom stan was a trade officer and became very rich. He took She bzang mo as his wife. His son was rNgog bTsan gzigs sbo ga. His son was sNang ba gzhung ba, who had two sons, Mang pa rje gZig gu and Mang btsan. As the two brothers did not go on well, the younger moved to sTod lung in the Central Horn (*dbu ru*). Mang rje gZig gu had two sons, sTag gung gzigs and Glang rgya ra gzigs. sTag gung gzigs had two sons: sTag ra mdo btsan and sTag ra g.yu yig. g.Yu yig had **three** sons: sTag tho (who settled in Byang thang), **sTag pa**, (and g.Yu khri). g.Yu khri had three sons: dPal le (who settled in ’Dam can), Ratna (who settled in g.Yon. He had two sons: sKyong bu and Khri mchog. They had three sons: mTha’ mi, ’Gar tsha, and ’Be tsha. They had three sons: sGo po, sGo chung, and Sher **legs. The rNgog from g.Yon go until Shes legs**), and Yul sbyin (who settled at sGog.) **Two generations after him came rNgog Lo [Legs pa’i shes rab]**. dPal le had two sons: gShang po and Rog po. Rog po had three sons: dGa’ po yu (from Sha po sgang), dGa’ la ’bar (from sKye grong), and Yang dga’ (from Nad kha). Yang dga’s son was rNgog Pan chen kha ba. (Until here, they are of the Old School).

Not much concrete details are provided after rNgog gTsan gzig snang ba, who seem to have been the most important religious figure before Chos rdor. One can note, however, that the

names of more brothers are provided as the genealogy progresses, which may indicate that the record-keeping was more accurate. ST2 provides more details than ST1 about the line that gave rise to rNgog Legs pa'i shes rab.

A general analysis of the rNgog genealogy contained in the *Rosaries* indicates that the account of the first generations of the rNgog family is largely fictive as mythical narratives about the beginings of the sPu rgyal Dynasty are mixed with later accounts, and hyperbolic descriptions abound. It is likely that the author of ST1 possessed some sort of genealogy that he may have supplemented with more general histories about the Empire, thus filling in the gaps with information largely exceeding the rNgog. This is especially clear for rNgog dPal khrom who lived at Srong btsan sgam po's time: his biography is filled with descriptions of the political and cultural innovations of the early 7th century rather than with his own deeds, and it is difficult to decipher what role he played. The rNgog enter a more historical phase with the five brothers who lived in the late 7th-early 8th century. This was a period dominated by competition with the neighbouring countries, especially Tang China, with first an expansion and then a contraction of the size of the Empire. The middle brother, gTsan gnya', was sufficiently successful to establish himself as a land-owner. His descendants similarly remained in the dominant part of the society, although they never played an important political role. They spread in various parts of Central Tibet (only one of them is said to go to Khams), even in cases like gTsan gnya' who travelled to the North-East during the battles led by the Empire. Chos rdor's grandfather, Yang dga', settled in a place called Nad kha, unidentified. As Chos rdor was born in the gZhung valley, it either means that Nad kha is in the gZhung valley and his grandfather settled there, or that it was Chos rdor's father, rNgog Pan chen kha ba, who settled in gZhung.

2.2. Branches of the rNgog clan and related family lineages

From that times onwards, rNgog Chos rdor and his family remained in gZhung, and where often called rNgog gZhung pa. There were in the 11th and 12th century several other masters known by the name rNgog. As their exact relationship has not been ascertained with certainty, this section aims at distinguishing these individual, and assess their possible interrelations.[843]

2.2.1. rNgog Legs pa'i shes rab and Blo ldan shes rab

The rNgog from gZhung are related to two famous rNgog masters, rNgog Legs pa'i shes rab (11th c.) and his nephew, rNgog Blo ldan shes rab (1059-1109).[844] A distant common ancestor is rNgog bTsan gnya', who lived at the turn of the 8th century.[845] He was a young warrior

[843] Kramer 2007, 35, n. 17, notes that rNgog Blo ldan shes rab was related to rNgog Chos rdor, but has no certainty on their degree of separation. Walter 2016, 522, who relies on the same *Rosaries* studied here provides the missing link between the two families but without much detail.

[844] Legs pa'i shes rab's dates are uncertain. Dan Martin gives 1018-1115 without specifying the source for this claim (http://www.treasuryoflives.org/biographies/view/Ngok-Lots%C4%81wa-Loden-Sherab/P2551, accessed 2017.03.25). Blo ldan shes rab's dates are also uncertain, see Kramer 2007, 32, n. 6.

[845] See above for details. ST1, 4-5, and *Deb sngon*, 391-392 (BA, 324).

fighting the Chinese during the Tibetan Empire's activity in the north-east of Tibet, in and around the 'A zha territory, and settled in the Gwra valley, to the east of gZhung.

Another common ancestor of rNgog Chos rdor and rNgog Legs pa'i shes rab was rNgog bTsan gnya's grandson, rNgog bTsan gzigs snang ba. Although a layman, he was a pupil of Guru Rin po che, became an adept of Phur ba and served in the religious office (*sku rim*) of the emperor Khri srong lde btsan.[846] According to the *Rosaries*, he owned land in the Dol valley, which borders on the gZhung valley and had many subjects under him.

The *Rosaries* state that eight generations after bTsan gzigs snang ba were born the three sons of g.Yu khri, called dPal le, Ratna and Yul sbyin. dPal le settled in 'Dam can; four generations after him Chos rdor was born. Yul sbyin settled in sGog, which is a place on the peninsula called Do, on the northern shore of the Yar 'brog Lake. This is confirmed by several sources.[847] Yul sbyin had a son called rDo rje zhon nu. He fathered five sons in sGog. The first was rNgog Legs pa'i shes rab, who founded gSang phu ne'u thog in 1073 and was a close disciple of Atiśa. The fourth was called Chos skyabs. His own son, Legs pa'i shes rab's nephew, was rNgog Blo ldan shes rab, the famous *lo tsā ba* who inherited gSang phu's abbacy.[848]

Although the common ancestry of the rNgog from gZhung and those from sGog seems clear and Chos rdor and Legs pa'i shes rab are 4th-generation cousins, their kinship is only allusively mentioned in ST2 and no direct encounter between members of the two family is known from the 11th century onward, although a latter abbot, Phywa pa Chos kyi seng ge (1109-1169), met with both mDo sde and his son Thogs med grags (see II.3.2.3 and and II.3.3.1 for details).

2.2.3. The rDog from gTsang

The relationship of the rNgog from gZhung with another clan, known by the name rNgog or rDog, is more uncertain. Some members of this family became known in the 12th century for their *Guhyasamāja* transmission, called rNgog lugs (or rDog lugs). This appellation warrants some level of misunderstanding, as Mar pa was also well-known for his transmission of *Guhyasamāja*, which, if Chos rdor had received it, could well have been called rNgog lugs. He did not, however, and Mar pa's *Guhyasamāja* tradition is called Mar lugs and was transmitted through mTshur ston dbang nge. The rNgog/rDog *Guhyasamāja* Tradition on the

---

[846] Van der Kuijp 1983, 269, n. 77; *mKhas pa'i dga' ston*, 1: 724*; Gu bkra'i chos 'byung*, 344*;* ST1, 5.

[847] *Pad dkar chos 'byung*, 378, states that Legs pa'i shes rab was born in sGog and *mKhas pa'i dga' ston*, 724, also specifies that rNgog Blo ldan shes rab was born in sGog, a place on the northern shore of the Yar 'brog lake. The *Gu bkra'i chos'byung*, 344, considers that Padmasambhava's disciple rNgog bTsan gzigs snang ba was born near the Yar 'brog lake (see Sørensen 2007, 175, n. 423), but according to the *Rosaries* it was Yul sbyin who settled in sGog.

[848] Kramer 2007, 33-35.

other hand came from the translation made by ’Gos Khug pa lHas brtsas and his transmission to rDog Mu ni.[849]

The history of that family is known through a family narrative called *rDog rabs gsal ba’i me long* (henceforth *rDog rabs*).[850] Their role in the transmission of the *Guhyasamāja* is clarified in Bu ston’s *Religious History of Guhyasamāja*.[851]

According to Per Sørensen, the name of the clan is not conclusively clarified, and could either be rDog or rNgog. The shape of the letters *da* and *nga* being close, the uncertainty is lasting for centuries and the two versions are found. The Tibetan scholar Mu dge bSam gtan (1914-1993), who came from their region of origin, considers that the spelling rDog is correct, with the “proof” that there are still people with that name in rNga ba and dMu dge.[852] Sørensen states that the reading rDog may be preferred since this line seems to be unrelated to the other rNgog.[853] I am also of this opinion: on several occasions, the *Rosaries* mention masters that may belong to that family. They speak of a “rDog Mun pa can” who was Jo thog’s *Guhyasamāja* master (section II.3.1.5.3), and of a “rDog *jo sras* Nyi ma” who was Ra mo’s disciple (section II.3.3.1 and II.3.3.2.). In all cases, they differentiate themselves from these masters by calling them either rDog or rTog. This does not demonstrate that these masters were called rDog, but that the rNgog from gZhung did not considered them kin. Although the identity of these two masters is not completely established, it is likely that at least the first is rDog Mu ni. I will therefore call this clan rDog throughout this work, which is also the spelling preferred in the *rDog rabs*.

The history of the rDog line starts, in their familial succession, with an Indian king called dGra ngan, who escaped to mNga’ ris in Western Tibet. One of his ministers, called rDog, further migrated to Eastern Tibet, near rTsong kha in Eastern Mar khams.[854] In the 11th century, rDog Ye shes ’byung gnas renounced his possessions and emigrated towards dBus gTsang in search of the Dharma, together with his brother and three nephews, Ye shes seng

---

[849] *gSang ’dus chos ’byung*, 9: 79-80.

[850] This is a forty-seven folio hand-written *dbu med* manuscript catalogued under C.P.N. catalogue no. 002813(2) and available on TBRC (W2CZ7699). This was compiled by a Nam mkha’ bsod nams in the late fifteenth or early sixteenth century. Sørensen 2007, 420-421, provides a summary and general information on the various religious members of the family. There is a new edition of the *rDog rabs* in the “Gangs can rig mdzod” series, based on the LGNT version (LGNT, 40: 417-509). Pages are given according to that computerized edition (see Nam mkha’ bsod nams in the bibliography for details).

[851] *gSang ’dus chos ’byung*, 78-79.

[852] Mu dge bsam gtan’s *gSung ’bum*, 3: 11-12.

[853] Sørensen and Hazod 2007, p. 421. Sørensen’s second reason for favoring the spelling rDog is that bTsong kha, the place of origin of the rDog line, may more likely be related to the proto-clan sT/Dong.” In Smith 2001, 219, the sTong tribe, is divided into four “princely lineages,” each subdivided into two (*stong rje bzhi khol brgyad*). Both the sNgog clan (var. rNgog), said to descend from rJe cig rTsang rje Thod dkar rje, and the rTog clan, said to descend from rJe cig sNyags rje Thog sgrom rje, belong to the sTong original tribe, which, according to Smith may come from Sum pa (which is closer to dBus than bTsong kha). Sørensen’s reason may therefore not conclusively favor either the rDog or rNgog spelling.

[854] *rDog rabs*, 142: *mar khams shar tsong kha’i yul*. rTsong kha is near Lake Kokonor, in today’s A mdo, or mDo khams.

ge, dBu ma rwa zhwa and rDo rje grags pa, with an entourage in the hundreds. Ye shes ’byung gnas became a scholar, and his nephews also entered a religious life.

rDog Ye shes seng ge,[855] in particular, took interest in the mantrayāna, and received the *Guhyasamājatantra* from Mar ston Seng ge rgyal mtshan, also known as Rong Mang ra ba Seng ge rgyal mtshan, who was ’Gos khug pa lHas btsas’s sun-like disciple.[856] rDog also received *Guhyasamāja* directly from ’Gos and figures in a group of “eight beams” (*gdung ma brgyad*).[857] He also received *Yamantaka* from Rwa Lo tsā ba and founded two monasteries, ’Jad dGa’ ldan in gTsang and Me tog mdzes ldan in the Dol valley (adjacent to gZhung). He took over Mang ra ba’s seat in Ram sdings after the latter’s death.

Ye shes seng ge’s son, Nyi ma seng ge,[858] became a major master in the transmission of the ’Gos tradition of *Guhyasamāja*. He was ordained by Ba ri Lo tsā ba (1040-1112) and received all the transmissions from his father. As he was extremely learned in tantric transmissions, he was likened to Śākyamuni and became known as rDog Mu ni. He was a prolific author,[859] and erected many temples and Buddha statues.

rNgog Mu ni had many disciples. Among them was gNyos Grags pa dpal (1106-1165), the great-grandson of Gnyos Lo tsā ba Yon tan grags, Mar pa’s friend and rival.[860] He also probably counted among his disciples mDo sde’s second son, Thogs med grags pa (1108-1144). It is indeed stated in the *Rosaries* that Jo thog listened to the Cycle of the Noble (*Guhyasamāja* of the Noble tradition) from rDog Mun pa can (<Mu ni?).[861]

rDog Mu ni’s son, rDog Āryadeva,[862] was the most famous of the line. He was born to a roaming *ḍākinī* who had become Mu ni’s secret consort when seeing that their child would benefit many beings. Although he received *Guhyasamāja* from his father, he mainly studied with his father’s main disciple, Klan rGyal tsha Nyi ma lcam (also called gTsan tsha or gTsang tsha) and became a specialist of the *Guhyasamājatantra*. rDog Āryadeva’s name was originally ’Phags pa skyabs. When his father died, he was invited to the rDog seat and all those present, who did not know him, were amazed. He thence was known as rDog Āryadeva

---

[855] *rDog rabs*, 147-148.

[856] *rDog rabs*, 147. In the *gSang ’dus chos ’byung*, he is part of a group of “four pillars” (*ka chen bzhi*).

[857] BA, 364, and *gSang ’dus chos ’byung*, 78-79. ’Gos’s disciple is called ’Jad kyi rDog ston chen po in the *gSang ’dus chos ’byung*, and rNgog dbus pa Ge ser in the BA. The description of disciples in both texts differs inasmuch as the former states that ’Gos’s disciples are the “four pillars, eight beams” (with only three of the eight listed, rDog one of them), whereas the latter speaks of “six disciples” (rNgog one of them). ’Jad is a valley in gTsang (see map in Dotson 2009, 171). The name “rNgog dBus pa” in the *Deb sngon* may either refer to the fact that the rDog also had a seat in Dol, or to someone else.

[858] *rDog rabs*, 148-152.

[859] *rDog rab*, 148-149. According to Stearns 2001, 187, n. 209, he was also called rNgog lBa ba can and authored an anti-*Lam ’bras* polemical text called *Gze ma ra mgo*. No such title is found among Mu ni’s writings.

[860] For a biography of the masters of that clan see Sørensen and Hazod 2007, 2: 413-48.

[861] ST1, 14:7 (spelled *brdog*); ST2, 40:3 (*rdog*).

[862] *rDog rabs*, 152-154.

(*'Phags pa lha*) for his resemblance with the Indian Āryadeva, whose heir he was in the *Guhyasamāja* lineage.

Among his other masters figure the Sa skya patriarch Grags pa rgyal mtshan (1147-1216) and mDo sde's student, gTsang sMra seng. Two of his students were Zhang ston rDo rje grags pa and Chag Lo tsā ba [Chos rje dpal] (1197-1263). Sa skya Pandita (1182-1251) is reported to have welcomed him in Sa skya. He had three sons and a daughter, and the family continued for several centuries, although they never reached again such religious prominence. Though rDog Āryadeva died young, at 31, he was widely acclaimed for his major commentary on the *Guhyasamājatantra*, which closes the collection of the *rNgog slob brgyud dang bcas pa'i gsung 'bum*,[863] thus adding to the confusion between the various rNgog lines.

Given the above descriptions, I propose the following tentative estimate of the dates of birth and death of the rDog masters, based on my reading of their *gDung rabs* and their relationship with other masters:

- rDog Ye shes 'byung gnas: c. 1050-1090.
- Ye shes sengge (his nephew; disciple of Rwa lo and late disciple of 'Gos Khug pa lHas btsas): c. 1070-1130.
- His son, Nyi ma sengge, a.k.a rDog Mu ni (ordained by Ba ri Lo tsā ba (1040-1112); teacher of gNyos Grags pa dpal (1106-1165): c. 1100-1160.
- His son, rDog 'Phags pa skyabs, a.k.a Āryadeva (studied with gTsang smra seng, mDo sde's disciple): c. 1155-1185.[864]

2.2.4. rDog/rNgog Byang chub 'byung gnas

In the *rDogs rabs*, one finds a passing reference to another famous master from the 11th century, rNgog Byang chub 'byung gnas, who was the main disciple of one of the "Ten Men of dBus gTsang," Klu mes Shes rab tshul khrim.[865] Klu mes was ordained in the 1010s and took part in the reintroduction of the Vinaya in Central Tibet after the period of fragmentation. He founded the monastery of Yer pa Ba reng, near lHa sa. rNgog Byang chub 'byung gnas took up the abbacy after him. This is where he welcomed Atiśa during the latter's visit to Central Tibet and lHa sa. According to the *rDog rabs*, when Atiśa enquired about his caste and clan, he replied that he was from a royal caste in India and belonged to the rDog clan, as his ancestor was the king dGra ngan's minister, rDog. He added that, in Tibet, there was nine great human lineages: those of the 'Dar, rDog and 'Khon in the west, those of the Khu, rNgog and 'Brom in the east and those of the So, Zur and gNubs in the middle.[866]

---

[863] "dPal gsang ba 'dus pa'i 'grel pa sgron ma gsal bar byed pa'i ṭīkka." In NKSB, vol. 34.

[864] It is difficult to account for Āryadeva's dates: he was alive in the late 12th century as Chag Lo tsā ba and Sa pan are said to meet him, but his father was ordained by Ba ri Lo tsā ba. Maybe Chag Lo tsā ba is Chag dGra bcom (1157-1216)?

[865] See Stoddard 2004 and BA, 74.

[866] *rDog rabs*, 143: *bdag gi yul rgya gar nas chad pa lags/ rigs rje rigs/ rus rdog zer ba lags zhus pas/ rgyal po dgra ngan gyi blon po rdog ces pa'i grags pa da dung yang yod gsungs/ bod du'ang/ stod na 'dar rdog 'khon*

Thus, if we are to believe that description, rNgog Byang chub ’byung gnas belonged to the rDog, and not rNgog clan, and was thus unrelated to either the rNgog from sGog or gZhung. His kin relation with rDog Ye shes ’byung gnas, who migrated from rTsong kha to dBus, is not clear, however. Although the *rDog rabs* does not provide any detail on that topic, it is possible that the rDog family separated early on, one line remaining in mNga’ ris (Western Tibet) while the other migrated to Mar khams (Eastern Tibet). Byang chub ’byung gnas and Ye shes ’byung gnas may be heirs to these two branches.

rNgog Legs pa’i shes rab also invited Atiśa to lHa sa at the same period. Per Sørensen describes, in the appendix to the *Rulers on the Celestial Plain*, the relationship between four monastic groups in and around lHa sa, which, based on their patronage by various clans and settlers, vied for power.[867] One of these group was from the gSang phu temple, established by rNgog ston Legs pa’i shes rab. Another was from Yer pa, which, at Atiśa’s time, was held by rNgog (<rDog) Byang chub ’byung gnas. The link between the two groups is not clarified, but it is clear that the lineage of ordination is different. On the basis of the *rDog rabs*, it is now justified to consider that they also had different family affiliations.

---

dang gsum/ smad na khu rngog ’brom dang gsum/ bar na so zur gnubs dang gsum ste/ bod na che ba mi dgu zer ba’i che ya gcig yin. (manuscript version, pp. 5-6).

[867] Sørensen and Hazod 2007, 2: 401-413.

CHAPTER THREE: The Lives of the rNgog from gZhung

rNgog Chos rdor inherited a double ancestry. He belonged to an ancient family which can be considered to have been a local elite, possessing some land, a noble name stretching many generations, and a religious background, and became the disciple of Mar pa Chos kyi blo gros who, although he was unknown when he went to India, met famous siddhas and imported to Tibet several of the most prestigious highest yoga tantras. The following large section, the core of the present dissertation, is an history of Chos rdor's hereditary lineage. It is based mostly on the *Rosaries*, which are quoted at the beginning of each section,[868] and complemented with all relevant information from other sources. This chapter successively presents the life, masters and disciples of Chos rdor, mDo sde, and of the members of the two lines that branched from him, first the rGyal tsha and then the gTsang tsha. The life of Byang chub dpal (1360-1446) is not contained in the *Rosaries*. As it represents the turning point of the rNgog lineage, it is presented in a distinct chapter (II.4). The final chapter of the dissertation (II.5) is a study of the gZhung valley after Byang chub dpal. Altogether, these three chapters are a history of the rNgog pa bka' brgyud hereditary lineage, but they also take into consideration how the lineage was conserved outside of the family. As evidenced by the fact that each of the rNgog family religious master had numerous masters and disciples outside of the rNgog family, the rNgog pa bka' brgyud lineage was not an hermetic line in which only Mar pa's teachings were practiced. Although the rNgog were famous for keeping Mar pa's instructions as pure as possible, they also received many other teachings, and had many students who spread the rNgog traditions outside of the family. As argued above, the representation of a lineage is a social and literary construct, and it is never as linear as later accounts claim. Thus, although some linearity is necessary in the present work for the sake of clarity, an effort is made to document parallel lines and intersections in order to picture the rNgog in their larger environment.

3.1. rNgog Chos sku rdo rje

3.1.1. Youth

> Yang dga's son is rNgog Pan chen kha ba. (Until here, they were of the old school). His son (with his wife 'Od ldan ma) is lama rNgog Chos kyi rdo rje. His son (with his wife dPa' mo chos mo) is lama mDo sde.[869] […]
>
> At Se lung, he learned the old tantras (*rnying ma*) with dGe bshes dGyer pa.[870]

---

[868] The page number of the original Tibetan is provided. For the Tibetan version, the reader is refered to Appendix 1 that contains a combined edition of ST1 and ST2, with additions from other sources. The pages indicated in that edition are those from ST1.

[869] ST1, 6.4; ST2, 30.8.

According to ST1, Chos rdor's father was called Pan chen Kha ba and his mother 'Od ldan ma. According to ST2, his father was Ban chen Kha ba. The *lHo rong chos 'byung* gives the name of Chos rdor's father as Paṅ chen Kha sa, and the *Deb ther dmar po* as Ban chen.[871] It is unclear whether the name should be read as Pan chen or Ban chen, but in both cases this sounds more like a title than a personal name. As he was married and had a son, the spelling Paṅ chen may be preferable, as it alludes to his erudition in the rNying ma tantras. From his youth, Chos rdor trained with his father in his ancestors' rituals and in the mantrayāna of the Old School.

Chos rdor's personal name is spelled in various ways. In Mar pa's biographies, he is generally called Chos *sku* rdo rje, but in the *Rosaries*, he is named Chos *kyi* rdo rje, as is clarified by his sanskritized name of Dharmavajra. It is possible that during his life he was only called Chos rdor, a name understood to mean "the vajra of the Dharma/of the teaching" within his family, but interpreted differently in Mar pa's biographical tradition, where he became Chos sku rdo rje, the "Vajra Dharmakāya." One of his great-great-grandchildren was also called Chos rdor, and his name is also translated as Dharmavajra, which reinforces the idea that Mar pa's biographical tradition may have come up with an independent etymology.

According to the *Rosaries*, Chos rdor was born in a pig year and lived to his sixty-eighth year. That pig year may either be the water-pig year of 1023–this is the date chosen by the *lHo rong chos 'byung*, or the wood-pig year of 1035. The *Deb ther sngon po*, which, compared to the *lHo rong chos 'byung*, postpones all dates of the rNgog family by a twelve-year cycle, also changes the element indicated in the *Rosaries*, and gives 1036 (*me pho byi*) as Chos rdor's date of birth, while keeping 1102 for his death, in his sixty-seventh year. According to most sources, he died five years after Mar pa, when rNgog mDo sde was in his thirteenth year, i.e. 1090 or 1102. The biography departing from this general agreement is the one by Mi bskyod rdo rje, rNgog Byang chub dpal's disciple, who states that Chos rdor was born in a tiger year (1026 or 1038) and died in his sixty-sixth year (1091 or 1103), without clarifying his reason. In light of the early dates chosen for Mar pa (ca. 1000-1081), unless noted, I similarly favor for the rNgog the early dates given in the *lHo rong chos 'byung*. Hence, I consider that Chos rdor was born in 1023 and died in 1090. He was therefore Mar pa's close contemporary, despite being his junior by twenty years.

Chos rdor's family lived in the gZhung valley, probably of few hundred meters above the present sPre'u zhing's monastery, at a place generally called Ri bo.[872] This valley was separated by a mountain from another, Se lung,[873] where dGe bshes dGyer pa (or dGyer chung)–a rNying ma master with whom Chos rdor furthered his training–resided. According

---

[870] ST1, 8.6-7; 33.6

[871] *lHo rong chos 'byung*, 50; *Deb dmar*, 63

[872] For more details about the geography and history of the gZhung valley, see section II.5.2.

[873] Se lung is the spelling one finds in the modern rNam rab guide and in ST2, 33. ST1, 8 has Si lung.

to elders living in the rNam rab valley today,[874] there was a track in the mountain leading from Chos rdor's house to Se lung, which is still visible today.

3.1.2. The relationship with with Mar pa

> During a teaching, dGyer pa said: "Nowadays, there is in lHo brag one called the Venerable Mar pa, who underwent innumerable hardships in India, and brought special instructions which are said to be the new (*gsar ma*) holy doctrine. Should I and rNgog ston go there?" [rNgog's] karmic connection having been awakened, extraordinary devotion and love rose in him. (He requested dGe bshes dGyer to go, but the latter said: "I am sick and old, and will not depart; but rNgog ston himself shall go.") That very evening, [rNgog] asked to leave the teaching, and went back to gZhung ri bo. He prepared some flour for the journey and so on, and the next day, [9] the lord, two servants, and a horse left for lHo brag. He offered that horse to the Venerable (who said: "if that is the [whole] offering, it is small indeed. If that is a support for a request, that is big indeed!"), and [rNgog] listened to the new secret mantras from him. Then, he invited the Venerable to gZhung ri bo.[875]

There are two main descriptions of the way Chos rdor met with Mar pa and became his disciple. The description given above in the *Rosaries* is also found in sGam po pa's biography of Mar pa[876] and in the *lHo rong chos 'byung*. It may have initially come from the narrative preserved in Tshe'u ban de's commentary on the *Two Segments*:[877] according to this version, rNgog first heard of Mar pa's fame while he was in gZhung studying with dGyer chung pa. He immediately felt faith in Mar pa and returned on the same evening to Ri bo. He packed overnight and immediately journeyed through the highland pastures to lHo brag. When Chos rdor reached Gro bo lung, he offered a horse to Mar pa. Mar pa, in a joking answer reminiscent of 'Brog mi's high demand for fees when granting transmissions, replied that this much would do to request an empowerment, but that more would be necessary to actually receive the empowerment. While Chos rdor was in lHo brag, two monks sent by Mes ston came to invite Mar pa in gTsang, where Mar pa had already sojourned some time ago. Chos rdor thought that his parents were old and would be happy to meet Mar pa, but they could not travel for it, so that he too should invite Mar pa to his home in gZhung. When he was invited, Mar pa replied that Mes ston had served him already, so that it was now rNgog's turn. Mar pa then went to gZhung, where a camp with many tents of black and white yak-hair was set in the wilderness during all summer. When Mar pa left in the winter, rNgog offered to him seventy *'bri* and other goods. rNgog travelled again later to lHo brag with Mi la ras pa and a

---

[874] *rNam rab Guide*, 181.

[875] ST1, 8-9; ST2, 33-34.

[876] sGam po pa's *gSung 'bum*, 1: 29-30. As pointed out above, there are many parallels between sGam po pa's biography of Mar pa, the *Rosaries*, and the historical section of the *Hevajra* commentaries. It is likely that the source of sGam po pa's account was one of these commentaries, or an oral teaching on one, as the narrative is not found in mDo sde's *Rin chen rgyan 'dra* itself (NKSB, 3: 11).

[877] NKSB, 19: 29-30.

herd of a hundred sheep, and yet another time with ten volumes of scriptures. He consequently received many teachings from Mar pa, foremost among them the cycles of *Hevajra*, *Vajrapañjara*, *Mahāmāyā* and *Catuṣpīṭha*.

In the sNyan brgyud version of Mar pa's biography,[878] rNgog first met Mar pa in the vicinity of gZhung, when the translator was traveling as a poor servant in between his two journeys to India. Chos rdor is depicted as a rich *tantrika* with long matted hair knit to the waist and accompanied by an archer in arms. Despite the contrast between Mar pa's indigence and rNgog's affluence, rNgog bows to his future guru and inquires about his identity. He then finishes some business and returns to escort Mar pa to gZhung. This version can be found in most biographies that follow the sNyan brgyud tradition of Mar pa's biography, the most eminent example being gTsang smyon He ru ka's.[879]

While the two descriptions insist on Chos rdor's immediate devotion for Mar pa, transcending reason and social condition, they do not occur in the same environment. In the former, Mar pa is already famous and established in lHo brag. Chos rdor travels to meet him there, and invite him back to gZhung in order to receive his teaching. In the latter, Mar pa is collecting money in anticipation of another journey to India and is still wanting in fame and wealth. He meets Chos rdor near gZhung, where he is invited.

In the wake of three great donations, Chos rdor is said to receive from Mar pa three cycles of tantric teachings (see section I.2). The first donation was made shortly after the first meeting, when Mar pa was invited to gZhung. He granted Chos rdor his foremost practice, that also became central in the rNgog pa lineage, that of *Hevajra*. The second donation, which was made up of books and everything Chos rdor could bring along, occurred in Mar pa's estate in lHo brag, in the end of Mar pa's life. Chos rdor was accompanied by his son mDo sde, who was in his fourth or fifth year.[880] As most sources agree that Mar pa died when mDo sde was in his eighth year, this might mean that the second and third donation occurred in a quick sequence. The donation served as a support for the transmission of *Catuṣpīṭha*. The final cycle, *Mahāmāyā*, was also received in lHo brag, as a result of Chos rdor having offered Mar pa his entire herd.[881]

Despite this presentation of three distinct occasions during which Chos rdor received Mar pa's teaching, it is likely that he met his teacher more regularly and received some teachings several times. One finds descriptions of these encounters in both Mar pa's and Mi la ras pa's biographies, with more details in the latter as Mi la ras pa was considered a student of both Mar pa and rNgog. In Mar pa's biographies following the sNyan brgyud tradition, it is clear

---

[878] KSTC, 166.

[879] Tsangnyön 1982, 49-50.

[880] The *Deb sngon*, 488 (BA, 404), states that Mar pa may have gone back to gZhung before his death as mDo sde received his blessing. According to the *Rosaries* and the descriptions of the second donation in Mi la ras pa's life, however, it is clear that it was Chos rdor together with his wife and son, and with Mi la ras pa as a servant, that went to lHo brag.

[881] See for instance gTsang smyon's biography of Mi la ras pa translated by Andrew Quintman: Tsangnyön 2010, 74-77.

that the first transmission occurred in between Mar pa's two journeys to Tibet. gTsang smyon is also adamant about this in his biographies of Mar pa and Mi la ras pa. In other traditions (sGam po pa and the *Rosaries*, and to some extent in the *Twelve Great Disciples*, a biography of Mi la ras pa), although it is not stated clearly, it is likely that all transmissions occur when Mar pa returned from India for good, that is to say from approximately the 1050s until Mar pa's death in the early 80s. In all cases, the two last transmissions occur in lHo brag in a quick succession.

Entering Another's Body

> Then, once, when the master [Mar pa] entered the corpse of a sparrow, [Chos rdor] watched what was going on: [Mar pa] said "if the sparrow takes off, close the openings and windows of the house!" The master transferred his consciousness in the sparrow's corpse, and the sparrow rose and started to fly; even though he flapped his wings, he could not find a way out, and so the consciousness re-entered the body of the master himself, who took a deep breath and said: "I'm back from having entered another's body!"[882]

The above quotation from ST1, an episode of Mar pa's practice of entering another's body (*grong 'jug*), is a recurrent motif of Mar pa's biographies,[883] where such an event occurs frequently and illustrates Mar pa's realization. This particular example of the sparrow is also described in sGam po pa's biography of Mar pa.[884]

Mar pa's biographies describe several occasions when his disciples, including Chos rdor, gathered with their master to take part in *gaṇacakra*s. None, however, give much lively detail about Chos rdor's daily life. The most detailed source to that effect is Mi la ras pa's life-story by his twelve great disciples, which to a large extent influenced gTsang smyon's *Life of Milarepa*.[885]

gTsang smyon (1452-1507) gives a very lively description of the year Mi la ras pa spent with Chos rdor when he fled Gro bo lung, desperate not to receive any teaching from Mar pa.[886] gTsang smyon himself spent some months in retreat in Mi la ras pa's cave in gZhung in the late 15th century (after the death of Byang chub dpal) and provides precise descriptions of the place. He pictures for instance the place where Mi la ras pa prostrated towards Chos rdor when arriving in gZhung (*phyag tshal sgang*), and the south-facing cliffhanging cave where Mi la ras pa spent some time in retreat under Chos rdor's supervision. These anachronistic descriptions reflect gTsang smyon's perception of the place rather than Chos rdor's, as sPre'u

---

[882] ST1, 10.

[883] See the part on that practice in Ducher 2017, 200-209.

[884] sGam po pa'i *gSung'bum*, 1: 31.

[885] See a translation of the *Twelve Great Disciples* in Quintman 2006, 292-341, and of gTsang smyon's text in Tsangnyön 2010.

[886] See Tsangnyön 2010, 69-74, and until p. 83 for Chos rdor's stay in lHo brag.

zhing was not erected at Chos rdor's time.[887] Chos rdor was then living in Ri bo, higher up in the mountains, and could not see the hill where Mi la ras pa is said to have prostrated, nor the cave where he meditated. Both places remained in the collective memory of the place, and locals continue to point to the hill and cave (which was desecrated during the Cultural Revolution and flooded away in the early third millenium) as significant holy places in the landscape of the rNam rab valley. Although the cave is mentioned in the *Twelve Great Disciple,* it is likely that it was gTsang smyon's depiction that made them famous. gTsang smyon gives a lively description of Chos rdor's devotion to Mar pa when he receives Nāropa's relics offered by Mi la ras pa, or the readiness with which he obeys Mar pa's orders and requests for offerings, thus illustrating Chos rdor's devotion:[888]

> [Mi la ras pa] offered prostrations and handed over the gifts. [Chos rdor's] eyes filled with tears and he held the gifts up to his head and received their blessing. Next, he placed these excellent sacred object on the shrine, giving them a place of central importance among very fine offerings. […] Lama Ngokpa said, "Since this is the lama's command, I will certainly give you initiation and oral instructions.

3.1.3. Chos rdor's relationship with other masters

As argued in the presentation of the transmissions that make up the rNgog teaching (I.2), it was the practices Chos rdor received from Mar pa that became the core of his tradition (the "seven maṇḍalas"), with the noteworthy exception of *Nāmasaṃgīti*, that Chos rdor received from other masters, as well as, or so is it said, from Mar pa. It does not mean that Chos rdor refrained from meeting other masters or that he exclusively received these seven practices: he was a very knowledgeable and powerful personality of 11th-century Tibet and had many masters from whom he received a vast array of teachings. These transmissions, however, did not play the enduring role the other maṇḍalas did, and they are mentioned in the *Rosaries* with much less details than the other.

Yoga tantras

The most important transmissions received by Chos rdor on top of Mar pa's highest yoga tantras were yoga tantras, and especially the *gSang ldan* tradition of *Nāmasaṃgīti*. The way Chos rdor received this cycle first from Bye ma lung pa Chos kyi seng ge, a disciple of the Indian paṇḍita Sūryasiddhi, and from Khams pa Shes rab rdo rje, an indirect disciple of Smṛtijñānakīrti, was described in section I.2.3.2. The *Rosaries* also described how he went to Shangs (in gTsang) in order to receive yoga tantras from Sum pa Ye shes 'bar. Because of some unhappy connexion, however, he did not request the transmission and instead travelled to 'O yug to receive it from an uncle of Ram klu gong pa.[889] The *Rosaries* do not clarify which of the yoga tantras Chos rdor wanted to request; it may have been the *Compendium of*

---

[887] See e.g. Tsangnyön 2010, 72: "The lama then imparted the Hevajra initiation. After he gave the oral instructions, I fixed up a south-facing cave on the side of a ravine overlooking the lama's residence."

[888] Tsangnyön 2010, 70.

[889] ST1, 10.1; ST2, 34.7.

Principles.[890] This yoga tantra, together with associated cycles, "played a crucial role in the establishment (and reestablishment) of Buddhism in Tibet from the beginning of the first dissemination of Buddhism through the early phases of the second dissemination."[891] Steven Weinberger argues that yoga tantras experienced a strong revival at the beginning of the second spread of Buddhism in Tibet, especially among the ruling elite:[892]

> [Yoga tantras] were seen as conservative in relationship to the violence and sex of later tantric developments and the deployment of such practices during the "dark" period. As such, the tantras of the Yoga class were used to reestablished authentic tantric lineages and "correct" modes of tantric behavior, as again the royal benefactors of Buddhism sought traditions that would promote social stability. This, in conjunction with their continued utility as a royal Vairocana cult and in funerary rites, resulted in Yoga Tantra traditions reaching the zenith of their influence in Tibet during the late tenth and eleventh centuries.

The insistance of the *Rosaries* on the fact that Chos rdor and his son mDo sde took great interest in yoga tantras, and great care in the proper way to receive them show that they were part of the period's elite.

Klog skya Shes rab brtsegs and Mahābala

> From Klog skya Shes rab brtsegs, he received *Mahābala*, and also prepared a translation of the *Mahāmāyātantra*.[893]

One of the masters that Chos rdor met was Shes rab brtsegs of the Klog skya family. This family is present in most of Mar pa's biographies as great benefactors of the promising young translator. Mar pa is said to have traveled several times to their fief, located at dGyer phu, in gTsang (La stod). In mDo sde's version of Mar pa's life,[894] Mar pa first meets "Klog skya" (spelled Lo skya) before his first journey, just after leaving 'Brog mi. gTsang smyon (and others in less detail), describes that Klog skya "the Great" (*chen po*) was then an old man, and when Mar pa returned several years later, it was his son, "Klog skya Jo sras," who welcomed him.[895] This name is famous in Mar pa's tradition as it was to him that Mar pa intoned the song about his meeting with Saraha. In rNam rdzong ston pa's version, Jo sras is named Lo skya ston pa 'Byung rgyal, i.e. 'Byung gnas rgyal mtshan,[896] but Padma dkar po, in his biography of Mar pa, identifies Jo sras with Shes rab brtsegs, without substantiating his claim. Although it is possible that Shes rab brtsegs met Mar pa before going to Nepal, he may also have met a brother or cousin of the Klog skya jo sras mentioned in Mar pa's song of Saraha.

---

[890] *Tattvasaṃgraha* (*De kho na nyid bsdus pa*), Tōhoku 479.

[891] Weinberger 2010, 133.

[892] Weinberger, 161.

[893] ST1, 10: 1-2.

[894] MKNT, 169 & 170.

[895] Tsangnyön 1982, 8 & 42; BA, 399.

[896] Mon rtse pa, 99. 'Gos Lo also gives that name (BA, 403) for one of Mar pa's earliest disciples.

Whether Shes rab brtsegs met Mar pa or not, he, like many of his time, went to Nepal to receive the dharma and translate texts. As shown by his translations in the *bsTan 'gyur*,[897] he worked with several masters, but his main guru was one of the Pharphing brothers, Vāgīśvarakīrti (*Ngag gi dbang phyug*), one of Nāropa's disciple also active at Mar pa's time, and from whom he received the *Cakrasaṃvara* cycle.[898] When he returned to Tibet, one of Shes rab brtsegs's main disciples was Mal Lo tsā ba Blo gros grags pa, who also studied with Vāgīśvarakīrti and later taught to the first Sa skya patriarch, Sa chen Kun dga' snying po (1092-1158). According to a lineage account in a commentary on the *Cakrasaṃvaratantra* from Lūyipa's tradition, Klog skya Lo tsā ba died while he travelled again to India.[899]

The *Rosaries* claim that rNgog Chos rdor was another important disciple of Shes rab brtsegs and that the two revised together the translation of the *Mahāmāyātantra*.[900] This perhaps indicates that their relationship occurred in the later part of Chos rdor's life, when he had received that transmission from Mar pa–after the second donation—and therefore held some authority on it. It is likely that both men were of approximately the same age and status, both accomplished and renowned masters coming from rich families, and therefore had a collaborative rather than vertical relationship. Shes rab brtsegs also revised Smṛtiśrījñāna's commentary on the *gSang ldan* tradition of the *Nāmasaṃgīti*,[901] and translated another text of this cycle.[902] Although the *bsTan 'gyur* colophons credit other paṇḍitas for these collaborations, it is conceivable that he received that transmission from Chos rdor, or worked with him, as Chos rdor was an expert in *gSang ldan* and had received it twice from sources close to Smṛtiśrījñāna (see I.2.3).

In addition to their work on Indian texts, in which Shes rab brtsegs brought his expertise in the Indian language and Chos rdor his profound knowledge of the practice and his prestigious lineage, Chos rdor is said to receive *Mahābala* (*sTobs po che*),[903] a wrathful form of Vajrapāṅi, from Shes rab brtsegs. As there is no text related to that practice in the NKSB, the content and specificity of that transmission is unclear, but the tradition took root within the rNgog lineage as rGyal tsha Ra mo is said to teach Vajrapāṅi sTobs chen as a child.

---

[897] He made five translations, four of which with Vāgīśvara[kīrti]: tōhoku 695 (=911) and 704 in the *bKa' 'gyur*, 1453, 1595 and 2593 in the *bsTan 'gyur*. He also made four revisions of translations (tōhoku nos. 425, 1651, 2533, 4259). The scholars associated with him for the revisions are Śīlaguhyavajra, Vajrapāṇi, Devākaracandra and Śāntibhadra.

[898] BA, 382.

[899] *Lū hi pa'i 'grel pa'i dka' gnad gsal byed*, NKSB, 21: 40: *de nas dge bshes glog kya lo tsā ba rgya gar du gshegs pas rgya gar du grongs*.

[900] *Mahāmāyā-tantrarāja* (*Dpal sgyu 'phrul chen po zhes bya ba'i rgyud kyi rgyal po*). Tōhoku 425. Tr. by Jinapara and 'Gos Lhas btsas. Revised by Glog skya Shes rab brtsegs [i.e. Klog skya].

[901] *mTshan yang dag par brjod pa'i rgya cher 'grel pa mtshan gsang sngags kyi don du rnam par lta ba*. Tōhoku 2533. Tr. by Smṛtiśrījñāna. Revised by Phyag na rdo rje (Vajrapāṇi) and Klog skya Shes rab brtsegs.

[902] *Gsang ldan gyi dka' 'grel don bsdus sgron ma*. Tōhoku 2593. Tr. by Devākaracandra and Klog skya. The author of this text is not known, but it is mentioned by Bu ston's *Yogatantra*, 180: 6 in the context of Smṛtiśrījñāna's tradition of *Nāmasaṃgīti*.

[903] See Bischoff 1956 and Linrothe 1999, 53-54 & 61, n. 5, for details on this transmission.

There are three texts associated with that deity in the *bsTan 'gyur*. One was imported during the old translation period and the other two are translations of Gayadhara and 'Brog mi Lo tsā ba in the early 11th century.[904] As Shes rab brtsegs does not appear in any of the lineages, it is difficult to assert which tantra and which *sādhana* were practiced by him and the rNgog. Several *sādhana*s were extracted from these tantras and are conserved in the *bsTan 'gyur*,[905] and the practice on the deity Mahābala was included, along many others, in several collections of *sādhana*s compiled in India and Tibet, from the 11th century onwards.[906]

Saṃputa and Ra Lo tsā ba rDo rje grags?

> [Chos rdor] received *Saṃputa* from Ra Lo tsā ba rDo rje grags (from Nye gnam)[907](after offering him a mDo mang).[908]

The *Rosaries* have a short sentence to the effect that rNgog Chos rdor received *Saṃputa* from Rwa Lo tsā ba rDo rje grags (1016-1128). This is also claimed in the lineage of *Saṃputa* given in ST1, which reads:[909]

> Lineage of *Saṃpuṭa*: Vajradhāra, *ḍākinī* Kamala Amghila, [8] Krisnācārya, Tilopa, Nāropa, Prajñarakśita, the Newar sPyi ther pa, R[w]a rDo rje grags, Chos rdor, mDo sde [...].

This, however, is not claimed in any other source, including Rwa Lo tsā ba own biography, and is subject to some caution. As far as Rwa Lo's life is concerned, despite interpolations and contradictions between the various sources,[910] it appears that he was a powerful

---

[904] *Mahābalanāmamahāyānasūtra* (*'Phags pa* ***stobs po che*** *zhes bya ba theg pa chen po'i mdo*), tōhoku 947; *Mahābalajñānarājatantrarāja* (*Dpal* ***stobs chen*** *ye shes rgyal po'i rgyud kyi rgyal po*), tōhoku 410; *Mahābalatantrarāja* (*Dpal* ***stobs po che****'i rgyud kyi rgyal po*), tōhoku 391. Although tōhoku 947 is called a sūtra, it can be considered a tantra (and is classified within *kriyatantras* in the *bKa' 'gyur*). According to Linrothe 1999, 58, this text belongs to the mantranaya, that is to say the "practice of mantras," i.e. the ritualized use within Mahāyāna of *dhāraṇi* and certain imagery shared with more developed forms of esoteric Buddhism […], but used in accord with more traditional Mahāyāna goals." As regards the practice of the rNgog, it is likely that it was rather associated with the later transmission, as it is called sTobs chen rather than sTobs po che in the part on Ra mo.

[905] Tōhoku 3290, 3388 and 3635.

[906] For instance, in the Indian *Sādhanamala* (edited in Bhattacharyya 1925 and 1928; *Mahābala* is *sādhana* 258 in vol. 2), and in the *Ba ri brgya rtsa* and *Nar thang brgya rtsa*.

[907] Called sNye nam in ST2, 34. According to Rwa Ye shes seng ge 1989, 3, the place, situated at the tibeto-nepalese border, was called sNye nam glang yul.

[908] ST1, 10.1; ST2, 34.8.

[909] ST1, 7-8. ST2, 32.8, omits Chos rdor's name.

[910] See Cuevas 2015a for a translation of his life story and Cuevas 2015b for a study of the various versions of his biography (esp. Cuevas 2015b, 57-58). According to Cuevas, the longer biography (translated in Cuevas 2015a) was written in this form at the time of the 5th Dalai Lama (17th century). He states (Cuevas 2015b, 76): "[The biography's] anonymous author appears to have compiled his narrative from several earlier sources, brought together and embellished for the purpose of bolstering the reputation of Rva lo tsā ba and his Vajrabhairava revelations, but perhaps also in turn to promote the religious and political agendas of the Fifth Dalai Lama and the far-reaching territorial dominance of his Dge lugs pa school." Further on the same page, he

Vajrabhairava practitioner. He travelled to Nepal where he had two major masters, the Newar Mahākaruṇa (*Bal po Thugs rje chen po*)[911] and Bha ro phyag ldum ('Maimed Hand').[912] In all likelihood, he was ordained in Nepal by Mahākaruṇa, and only travelled shortly to holy places and universities in India to make offerings. He was well-known for his somptuous offerings to his masters, and for his renovations of many Buddhist places. Although Tāranātha states that his main residence was in Nub mdor, in the g.Yas ru, he did not found a monastery. He led an itinerant life from one monastery and one patron to the next, achieving great fame and weath all over Tibet, and gathering many disciples. One finds in his biography a description of his rivality with several 11th-century masters, and especially Mar pa's son Darma mdo sde, that he claims to have killed (see below part on mDo sde for more detail on this).

As far as his *Saṃputa* transmission is concerned, he is said to have received it from the Newar Mahākaruṇa, who was himself a disciple of Nāropa's student Prajñārakṣita. This fits with Kong sprul's description of the *Saṃputa* lineage in the index to the KGND:[913]

> Vajradhara; Tilopa; Nāropa; rNgog father and son, and so on. Also, from Nāropa: Prajñārakṣita; Newar Mahākaruṇa, a.k.a Me tsa gling pa; Rwa lo rDo rje grags; rNgog jo sras mDo sde; rNgog Kun dga' […]

This lineage also corresponds with the colophon of a *Saṃputa* commentary by rNgog mDo sde (Zhe sdang rdo rje):[914]

---

speculates that this author "may a Dge lugs pa advocate familiar with and sympathetic to the Rnying ma pa. He also must have had ties to the Eastern Rva tradition that passed through the lineage of Rgya ston Kun dga' brtson 'grus and thus in turn the hierarchs of Zhva lu monastery, and particularly the patriarchs of the Tshar pa tradition. If at this point we had to guess the author's identity, there may be only three plausible candidates to choose from: 'Khon ston Dpal 'byor lhun grub, Zur chen Chos dbyings rang grol, or Mgon po Bsod nams mchog ldan. My hunch is that the text may have been assembled by one of these three teachers or by an anonymous scribe, or a small team of scribes, working under their influence." These remarks are included here in order to illustrate the care with which data in this particular text should be handled, althoug this example can be applied to many biographical narratives. Rwa Lo is generally said to be born in 1016 and to die in 1128. These dates were first determined by Tāranātha (Cuevas 2015b, 66).

[911] He is also called Dīpaṅkararakṣita and Paṇ chen Me tsa ling pa (Menjadvipa). 'Gos lo (BA, 361, *Deb sngon*, 439) refers to him as "the great *upāsaka* of Ye rang, or the Nepālese Mahākaruna." As remarked by Lo Bue 1997, 647, it is possible that Mar pa also met that master at the Ramadoli charnel ground (Tsangnyön 1982, 119-122; the Ramadoli episode also appear in early versions of Mar pa's life although this master is not named. See Mon rtse pa, 97; rGyal thang pa, 170). In this episode, Mar pa makes a *gaṇacakra* with Newar gurus who fear to stay out too long because of the *ḍākinī*s. Mar pa finds them ridiculous and wants to return to India. If this is indeed Rwa lo's guru, one might find in Mar pa's contempt a reason for Rwa lo's (or his biographer's) later "revenge" on him, when he killed Mar pa's son Darma mDo sde. See Decleer 1992 for further details.

[912] See Decleer 1995 on Bharo's life and his masters, and Decleer 1994-5 on his relationship with Rwa Lo tsā ba and his hermitage near the Chobar gorge.

[913] KGNDdkar chag, 23-25.

[914] "dPal sambu ṭa'i rnam bshad gzhung gsal ba'i sgron ma." In NKSB, 5: 88-253. Colophon p. 253 (also in NKCK, 2: 244: 4.): *shin tu rtogs dka'i kha sbyor thig le 'di/ /mkhas pa chen po pra dznya ra tri tas/ /nā ro chen po'i zhal gyi man ngag rnams/ /rang nyid mi brjed phyir na ti ga mdzad/ /de'i gzhung 'dzin thugs rje chen po la/ /me phyed grags pas gsan nas slob ma'i phyir/ /tshig don gtso bor gyur nas bshad pa mdzad/ /bla ma la gus zhe sdang rdo rje la/ /slob ma bzang pos gsol ba btab nas su/ /zhan la phan phyir don tshig rgyas par bzkrol/ […]*

> This drop of the *Saṃputa*, very difficult to realize, are key-instructions on Nāropa's speech by the great learned Prajñarakśita, who composed a commentary on it not to forget them. **Me spyed grags pa** learned it from Mahākaruṇa, a holder of that text, and for his disciples redacted an explanation, which [commented] mainly on the meaning of the words. Zhe sdang rdo rje, who had respect for [that] master, was begged by his good disciples to comment *in extenso* on the meaning and on the words, for the benefit of others. […]

The name Me spyed grags pa may be a scribal error referring to Rwa rDo rje grags pa. This colophon too therefore clearly indicates that the *Saṃputa*'s teaching was received by rNgog mDo sde, and not Chos rdor. Except than the *Rosaries*, all sources thus indicate that it was mDo sde who met Rwa Lo tsā ba and received *Saṃputa* from him, not Chos rdor. Subsequently, the *Saṃputatantra* was practiced in the rNgog lineage in the form of the root-maṇḍala of *Cakrasaṃvara* Vajrasattva with thirty-seven deities,[915] and this transmission is preserved in the KGND.

Given this, one may wonder if there are any reason for the *Rosaries* to state that Chos rdor had received *Saṃputa* from Rwa Lo tsā ba. A reason for this may be the competition with the Sa skya pa surrounding the *Hevajra* cycle and the fact that Mar pa's transmission was seen as lacking the exegesis of the *Saṃputa* as it relied relied mainly on oral instructions from Nāropa and Maitripa.[916] By stating that Chos rdor received *Saṃputa* from Rwa Lo tsā ba and by outlining the *Saṃputa* lineage on a par with other transmissions, the *Rosaries* place this maṇḍala at the same level as the ones which became the core of their familial teaching. Thus, they implicitely answer to the Sa skya pa's critique of their tradition of *Hevajra* as incomplete. In view of this, it seems therefore justified to consider erroneous the claim of the *Rosaries* that Chos rdor met Rwa Lo tsā ba and received the *Saṃputa* from him. We will see below in more details how it was mDo sde who interacted with this master and introduced this transmission in the rNgog lineage.

3.1.4. Daily life

Chos rdor as a householder

> When [mDo sde] reached his fourth or fifth year, for the middling great donation, father, son and everyone, with Mi la ras pa as a servant, went into the master Mar pa's presence in lHo brag. They received from him the two empowerments of Nine Deities [*Hevajra*] and Fifteen Female Deities [*Nairātmyā*]. One day at the Dharma place where they were receiving the tantras, the boy would sometimes climb on his father's shoulder and pull his hair and beard, and sometimes would pull the master's hair and beard. His

---

bla ma rje btsun zhe sdang rdo rje yis/ /gzhung gi sgron ma mdzad la ma rgyas pa/ /a saṁ kir tis gsung dang mthun par bcos/

[915] KGNDdkar chag, 23: *bde dgyes sogs kyi bshad rgyud thun mong pa sambu ṭi las gsung pa'i rtsa ba'i dkyil 'khor bde mchog zhi rdor sems lha so bdun pa.*

[916] See this critique as it is formulated in Sobish 2008, 46, n. 114.

> father said "this is not comfortable! Tomorrow, I shall not bring him along!" but the Venerable [Mar pa] made a declaration: "Do not leave the kid behind, bring him along! He is called rNgog gZhung pa mDo sde and will become a meritorious one. It is because he will say "I have met with the Venerable Mar pa" that my lineage will come to have a following!"[917]

A second role in which Chos rdor is pictured in the *Rosaries* and in other biographies is that of layman, and singularly, in the above description, that of father. He seems to have had an only child, or at least one son, that he named mDo sde in honor of his lama's own son Darma mDo sde.[918] In this description, said to happen during the middling donation, Chos rdor journeyed to lHo brag with his family, accompanied by Mi la ras pa who had just spent a year with him in gZhung. Although the donation is generally said to have served as a support for the *Catuṣpīṭha* transmission, the initiations Mar pa is said to grant are the nine-deity maṇḍala of *Hevajra* and the fifteen-deity maṇḍala of Nairāmya. It is possible that he gave *Catuṣpīṭha* to Chos rdor and repeated the *Hevajra* initiations for mDo sde as a special connection, or that the *Rosaries* wished to make clear that there was a direct lineage of *Hevajra* between Mar pa and mDo sde. The description of mDo sde climbing on his father's and Mar pa's shoulders and of pulling their beards during initiation sessions may be reminiscent of little children's behavior and is an insight into these masters' intimate life, although it is evidently narrated to back a direct relationship between rNgog mDo sde, crucial for the legitimacy of the rNgog transmission.

Chos rdor's wife, dPa' mo chos mo, is often mentioned in his life. In the *Deb ther sngon po*,[919] she is called sBa mo Chos brtson, and sPa mo Chos smon in the *lHo rong chos 'byung*.[920] Although her personal name varies, the name "dPa mo" refers to the fact that she was the sister of sPa lBa ba can, himself a disciple of Chos rdor who was instrumental in transmitting the rNgog's teachings to mDo sde after Chos rdor's death. In the description above, she probably accompanied Chos rdor to lHo brag in order to tend their young child. In the *Twelve Great Disciples*, she takes care of Mi la ras pa while he stays in gZhung,[921] and she requests Chos rdor to return to their estate to oversee his business after they spent some time in lHo brag, during the middling donation.[922]

Chos rdor as a landlord

> Once, [rNgog] had a disagreement about pasture with the [people from] Yal pho mo in Dol. They had encroached on the lama's [territory] (by letting the cows and sheep of the upper [valley] graze freely) and caused him much harm. The Venerable Mi la ras pa conjured hail from a cave: in the magic pit, many omens appeared, like thunder-

---

[917] ST1, 11.3; ST2, 36.2.
[918] *dGe ye History*, 30b5.
[919] *Deb sngon*, 491 (BA, 406).
[920] *lHo rong chos 'byung*, 53.
[921] Quintman 2006, 305.
[922] Quintman 2006, 308.

> rolls and so on, and a great hail fell on the rift of Yal pho mo. The valley was flooded, and everything–fields, villages, houses, men and cattle–was carried away. Everywhere was filled by quick ravines and great floods. When the Venerable came back, there were corpses of many dead birds all along the road. He covered them in his chuba, heaped them in front of the Master, and said, weeping: "I came to receive the dharma from the Master, but now I have accumulated such an evil deed! How much more should there be that I die?"
>
> The master replied: "Oh you, Ras pa, you do not need to be afraid. I have the instructions of mahāmudrā which are like a hundred dances led with one pair of reins, or one hundred birds driven with a single slingshot: these are profound methods that enlighten the sinner in an instant. I will give them to you with a speech of generosity." He snapped his fingers once, and instantaneously all the small birds' corpses took off and left.[923]

As argued in chapter I.3, Chos rdor belonged to Central Tibet's rural elite. He owned an estate with a lot of cattle (horses, sheep, cows and yaks), that he could afford to give away several times. He offered many manuscripts to his masters and invited several of his masters at his home for long periods of time. He could travel with servants and was richly dressed.

He lived with his family in Ri bo, a few hundred meters further up than the actual sPre'u zhing temple and right under the pass to the Dol valley, east of gZhung. According to the above episode, once the neighbour's cattle encroached on his land and caused some damage.[924] As a retaliation, Chos rdor ordered Mi la ras pa to cast hail on their fields, thus ruining their harvest.

One finds in the biographies of Mar pa, Mi la ras pa and rNgog many descriptions of how black magic was used in ancient Tibet to settle arguments. Here, Mi la ras pa is asked by Chos rdor to cast hailstorms upon Dol to settle pasture rights. In the *Twelve Great Disciples*,[925] the same episode is recounted with reference to bandits attacking Chos rdor's disciples. Mar pa also asked Mi la ras pa to punish bandits who where stealing from his disciples on their way to lHo brag,[926] and requested mTshur ston to kill his cousin, Mar pa Mon nag.[927] In all these cases, no feeling of guilt is described in either Chos rdor or Mar pa: mTshur ston is rewarded with the *Guhyasamājatantra* transmission, and the episode illustrates Chos rdor's capacity to revive the birds killed in the hailstorm. The only one to feel remorse is Mi la ras pa, the "Great Magician," who is requested again and again to use his black power before receiving any teaching.

---

[923] ST1, 10.

[924] Although ST1 only says *yal pho mo*, ST2 specifies these are places (or people?) in the Dol valley. This episode is described with more details in Tsangnyön 2010, 70-72, but there the problem is not about pasture rights but because people from Dol harass Chos rdor's visitors (like in the *Twelve Great Disciples*).

[925] Quintman 2006, 304.

[926] Tsangnyön 2010, 54

[927] BA, 314-315

This passage indirectly describes the violent storms that can happen in this area. The actual temple of sPre'u zhing is located a few meters away from a ten to fifteen-meter deep gorge. When I was there in June 2014, there was only a little stream flowing in the large ravine, which could easily be crossed on foot. It is difficult to imagine how much water is necessary to increase the water-level from one to fifteen meters high and twenty meters wide, and flood everything on the way, especially as the pass is no more than three to four kilometers away. As the large boulders in the gorge and the flooding of Mi la ras pa's cave in the 1990s demonstrate, however, this happens, and it is not surprising that magic may be called upon to explain such violent displays of nature.

Death

> When [mDo sde] reached his twelfth year, he knew the *Two Segments*. Once there was no teaching, [mDos sde's] father's condition worsened a bit, so [Chos rdor] led his son on the slopes of the enclosed retreat-hill and said:
> "Now, it seems that your father too cannot stay any longer. If I die, how do you think you will do?" The son answered:
> - I will give our possessions for Father's farewell ceremonies, and will request teachings from Father's greatest disciples.
> - Son, there are some of great aptitude! […][928]
>
> When [mDo sde] reached his thirteenth year and his father was in his sixty-eighth year, just after sunrise on the dragon third day of the dog [seventh] month of a horse year, while wearing a thin cotton fabric over his body and carrying a small skull hand-drum (*thod pa'i lcang te'u*), he said: "I'm going to Khecara; is there someone going with me?" He did three circumambulations around the retreat place, and as no one else came, he stepped on a boulder (over which a stūpa has been built), left a dazzling footprint, and ascended in the mist towards Kechara in the sound of the hand-drum.[929]

This part of the text, within mDo sde's biography, relates rNgog Chos rdor's passing. It is presented in two steps: first, Chos rdor falls ills and feels he may die soon. During a break in his teaching to his son, he brings him to the retreat hill, where he asks him what he intends to do when that happens. One can indeed imagine the responsibility that will lie on mDo sde's shoulders when he inherits from his father, and the reasons why Chos rdor checks his son's plans: he is only eleven at the time, and twelve when his father dies (i.e. in his 13th year). He will nonetheless be responsible for transmitting Mar pa's legacy and taking care of the estate. mDo sde's answer, as we read it here, is ideal for such a situation: he will take care of his father's funeral and continue his education with his senior disciples. Thus, when Chos rdor is 67 (in his 68th year), five years after Mar pa's death, on the third day (ST2 says "the dragon

[928] ST1, 11: 6; ST2, 36.5.
[929] ST1, 12.2. ST2, 37.2

day") of the seventh month (the "dog month"), in a horse year, 1090 (or 1102), Chos rdor returns to the hill, alone, and flies through the mist to Khecara on the sound of the hand-drum.

One finds in Matthew Akester's translation of *Khyentse's Guide to Central Tibet* a local version of this event in a much more scenic version. This was narrated by the late lama dPal 'byor ye shes, who came from the Sa skya monastery of Ra ba smad located at the entrance of the rNam rab valley. It was repeated to Akester by one of the lama's attendants:[930]

> […] according to a popular story, Ngok noticed a filthy, cantankerous old woman in a turnip field across the valley, whom he recognized as an emanation of his tutelary goddess Nairātmadevi. He sent his disciples to buy some of her turnips, and before handing them over, the old hag smeared them with pus from a wound on her breast. On their return, the master had his nauseated disciples cook some soup, without washing the turnips first, and when it was ready, he told everyone present to drink some, and to give some to the animals also. His followers were too disgusted to drink, but the master took a bowl, and then, followed by the couple of dogs which had happily slurped up the rest, took off into space.

This story cannot be found in any of my written sources. It is interesting, however, to note that Chos rdor's deity is said to be Nairātmyā, Hevajra's consort. The *mKhas pa'i dga' ston* indeed declares that Chos rdor and his descendants had three visions of the fifteen-goddess *maṇḍala* of Nairātmyā over the temple Chos rdor built in Ri bo,[931] which indicated an intimate relationship between Chos rdor and Nairātmyā, especially at such time when he is welcome by *ḍākinī*s to go to Khecara.

The retreat hill where Chos rdor departed is located opposite the actual sPre'u zhing temple, on a north-facing slope. As indicated as a note in ST1, five stūpas–four small ones and a big one–stand today on the spot commemorating Chos rdor's departure. They are near the ruins of two buildings that used to be a retreat center called bSam gtan dben gnas affiliated to Gong dkar chos sde, possibly built at the place where the rNgog retreat-centre was previously located.

3.1.5. Chos rdor's disciples and their lineages

> - Son, there are some of great aptitude! As it is of the utmost importance to make no mistake in the tradition in which you receive teachings, listen to *Hevajra* from Ram, listen to *Saṃpuṭa* from dMyal pa rDog chung ba, listen to *Nāmasaṃgīti* from sPa lba ba can, and listen to *Mahāmāyā* from rTog Mun ba can![932]

---

[930] Akester 2016, 267 and personal communication with the author, 2014.12.19. According to Matthew Kapstein (personal communication, 2017.09.14), a similar story, though unrelated to Chos rdor, was told to him by bDe gzhung Rin po che. It is therefore likely that the trope of a monk, or else, not eating vegetables gifted by mysterious women, hence not receiving *siddhi*s, is a common one.

[931] *mKhas pa'i dga' ston*, 777.

[932] ST1, 11.7; ST2, 36.7.

> […]
> The great disciples of Lama Chos rdor were the venerable Mi la, Ram rTsan can, rDog Mun pa can, sPa lba ba can, and Sum pa Phod kha can.[933]

As Chos rdor died when his son mDo sde was quite young, his disciples were instrumental in the transmission of Mar pa's legacy. Several names are therefore listed twice in the *Rosaries*, once when Chos rdor gives instructions to his son on whom to rely on to receive which tantra, and once again in the end of the text. One finds additional names in the *Deb ther dmar po*,[934] which is probably the source of later texts such as the *lHo rong chos 'byung*[935] and *Deb ther sngon po*.[936] As far as the orthography is concerned, the most reliable version seems to be the *Rosaries*.

The lineages described in the *Rosaries* generally mention rNgog masters, with less emphasis on disciples outside of the family. In other records, however, these disciples sometimes figure prominently. A case in point is the relationship between Chos rdor, his son mDo sde and his disciples. In texts related to the rNgog family, there is a direct transmission between Chos rdor and Do sde. In Bu ston's record of teachings received, however, the lineage of *Pañjara* goes from Chos rdor to three of his disciples—sPa lBa ba can, "rNgog" (that is to say dMyal pa rDog/rTog chung pa) and Rgya A ma can—and then to mDo sde. Mentioning Chos rdor's disciples between him and his son clarifies the fact that he died when mDo sde was young, and that mDo sde therefore needed to receive again the transmission from his father's disciples. A direct lineage between the two, on the other hand, emphasizes the direct blessing Chos rdor gave to his son—although mDo sde may not have received the full import of the transmission as a child. Similarly, several lineages go directly from Mar pa to mDo sde, although the former died when mDo sde was still a child.

3.1.5.1. Ram rTsan can

> [Chos rdor] went to 'O yug to listen to the yoga tantras from an uncle of Ram Klu gong pa.[937] […]
>
> When [mDo sde] arrived at Ram's place at 'O yug, there was a feast and so they chatted. Being slightly unhappy about that, [mDo sde] said that he did not request a dharma-link.[938]

The Ram family was based in 'O yug, a valley north of the gTsang po, in gTsang.[939] The first time someone of this family is mentioned in the *Rosaries* is when Chos rdor went there to

---

[933] ST1, 23.4; ST2, 49.1.
[934] *Deb dmar*, 76
[935] *lHo rong chos 'byung*, 52
[936] BA, 406; *Deb sngon*, 491
[937] ST1, 10.1; ST2, 35.1.
[938] ST1, 12.5; ST2, 37.5.

study the yoga tantras with an "uncle" of Ram Klu gong pa. That appellation, "Ram from Klu gong," is the generic name used for the Ram masters of various generations, on a par with the term rNgog gZhung pa, the "rNgog from gZhung."

Ram Klu gong pa was himself one of Chos rdor's four main disciples, particularly known for his transmission of *Hevajra*.[940] In the *Rosaries*, he is more specifically referred to as "Ram rTsan can,"[941] while his name is simply Ram Klu gong pa in a commentary on the *Hevajratantra* composed by one of his distant disciples, Shes rab mthar ldan.[942] As stated in the KGND,[943] Ram also received the transmission of *Hevajra* directly from Mar pa. Chos rdor, though generally considered Ram's master, also requested him to teach "the pure teaching of Mar pa," in exchange for a beautiful *mūdra*.[944] Ram's tradition (*ram lugs*) was famous for its combined exegesis of the *Hevajra*- and *Nāmasaṃgītitantras*, while the rNgog's tradition adhered strictly to the teachings of the *Hevajratantra*.

Unlike his father, mDo sde was not impressed by Ram. He went to 'O yug to fulfil his father's testament, but was unhappy with the way he was welcomed. As with Chos rdor's aborted relationship with Sum pa Ye shes 'bar, the inauspicious events surrounding the meeting were invoked to call off the request to receive *Hevajra* from Ram. Afterwards, the two traditions grew distinct and, from the point of view of the Ram tradition's holders,[945] mDo sde's teachings on *Hevajra* were unclear because he relied only on the rNgog pa's explanations and disregarded Ram's.

---

[939] Sørensen and Hazod 2007, "K" in map 1, 2: 409. The tentative localization is for a place called "['O yug] Klu gong.

[940] He is called *dgyes rdor gyi bka' bab* in *lHo rong chos 'byung*, 65.

[941] He is called "Ram Tsag can" in the *lHo rong chos 'byung*, 65. In the biographical introductions within the dPal brtsegs edition of the NKSB, vols. 21 & 22 (Tre bo rDo rje mgon po) and 23 (lCe'i Ban de dBen tsa), Chos rdor's disciple Ram is called Ram Klu gong pa rDo rje grags. As will be seen below, Ram Klu gong pa rDo rje grags was a disciple of mDo sde. He received *Vajrapañjara* from him (see ST1, 8 for the lineage) and may have been Ram rtsan can's son or grandson. It is possible that the dPal brtsegs editors (like several of the biographies) were confused by the semantic proximity between Ram (Klu gong pa) rDo rje grags and Rwa (Lo tsā ba) rDo rje grags. The latter sometimes figures among Chos rdor's masters, although he was in fact related to mDo sde.

[942] NKSB, 23: 325. The name of the author of this *Hevajra* commentary according to the Ram tradition is given in the colophon: *brtag pa gnyis pa'i rnam par bshad pa rdzogs so// he ru ka dpal drug par do rje 'chang/ bde chen rang bzhin 'od gsal go bzlog pa/* ***shes rab mthar ldan khyod kyi pad mar gtugs****/ dri med rjes 'jug bstan pa'i sgron me 'dis […]*. It is not clear whether it is Shes rab mthar ldan who is addressing his master "[Me] Shes rab mthar ldan I touch your lotus feet," or whether his disciple addresses him: "I touch your lotus feet, ô you Shes rab mthar ldan." In the latter case, he would not be the author.

[943] KGNDdkar chag, 20.

[944] Most of my explanation is based on the *Deb sngon*, 492-493 (BA, 407-408), in which a long excursus within the life-stories of the rNgog describes the Ram tradition. I am not quite sure, however, of the meaning of some crucial phrases, in particular the one about the *mūdra*, 492: *rngog chos rdor la phyag rgya ma mdzes ma zhig yod pa yang phul*. As this phrase figures with several others which have Ram as their subject, the meaning may be the opposite of what one spontaneously understands (as Roerich did), namely: "rNgog Chos rdor had a beautiful *mūdra* that he offered to [Ram]." It could rather be interpreted as: "[Ram] had a beautiful *mūdra* that he offered to rNgog Chos rdor." In the former case, it would mean that Chos rdor requested important teachings from Ram, but not in the later.

[945] *Deb sngon*, 493: *mdo sde rngog la nyan pas bshad pa nyog po de byung pa yin zer*.

Ram rTsan can established an important seminary for the transmission of *Hevajra* in Shangs (the valley adjacent to ’O yug). According to the *Deb ther sngon po*, he gave his transmission to his nephew Ram rDo rje grags[946] and to the scholar rGya Nam mkha’ dbang phyug. rGya nam then taught to Tre bo (Tre ho) rDo rje mgon po, who had first come to debate with him and finally became his disciple. Both commented on the Ram tradition of *Hevajra*. Rgya nam also taught Tre bo mgon po the four explanatory tantras of the *Cakrasaṃvara* cycle.[947] Although Tre bo mgon po is considered mDo sde’s disciple in the *Deb ther dmar po* and *Deb ther sngon po*, his name does not appear among mDo sde’s students in the *Rosaries* and no details about their possible relationship is known. According to the *Deb ther sngon po*, his line of interpretation of the *Hevajra* cycle is according to the Ram Tradition. Two volumes of his writings are included in the NKSB.[948]

According to Shes rab mthar ldan’s *Hevajra* commentary,[949] Ram had four main disciples: lHo’i kre ston mchog dga’, Nyang stod rgyal gling gi rGya dar seng, lCe bande dBen tsa and Bo dong so pa.[950] lCe bande dben tsa’s commentary on *Hevajra* is also included in the NKSB, but does not contain any information about Ram.[951]

Bo dong so pa taught to Grog ra ba from Khams,[952] who taught to Glan ston gsal ’od. Glan ston gSal ’od also received the transmission from Ram rDo rje grags.[953] In a commentary on *Hevajra* composed by Glan ston’s disciple, Cher ston bSod nams bzang po,[954] it is said that Glan ston held the lineages of *Hevajra* from both Mes ston and rNgog Chos rdor.[955] The rNgog tradition is most likely the one that comes from rNgog mDo sde and Ram rDo rje grags. He also held several lineages that are now preserved within the *Sa skya bka’ ’bum*.[956]

Five volumes of the NKSB (vols. 21-25) thus contain texts which cannot be considered the rNgog tradition, although they initially came from Mar pa and were related to Chos rdor. If

---

[946] See details about him in the part on mDo sde. He is called Ram rDo rje btsan in the *Deb sngon*, 493. Given the importance of Ram rDo rje grags in the familial transmission, I think *rdo rje btsan* can be emended to read *rdo rje grags*. I did not find any clear lineage of the *Hevajra* Ram Tradition in any of this tradition’s commentaries, where the historical part, if present, stops with Mar pa.

[947] BA, 388.

[948] Vols. 21 & 22. He was known as a great scholar, as is demonstrated by the diversity of his writings on *Guhyasamāja*, *Cakrasaṃvara*, *Pañjāra* and *Hevajra*. The *Hevajra* commentary in vol. 22 is very different from the ones in the rNgog tradition and represents the Ram tradition. Tre bo mgon po held Mar pa do pa’s tradition of Cakrasaṃvara. None of the colophons or lineages of Tre bo mgon po (also called rDo rje mgon po) in vols. 21 & 22 demonstrate a relationship between him and the rNgog, but the *Deb sngon* (BA, 376) also state he studied with Rwa Lo tsā ba.

[949] NKSB, 24: 23.

[950] Not much is known about them, and the previously mentioned rGya nam does not appear in the list (could he be Nyang stod rgyal gling gi rgya dar seng?)

[951] lCe’i bande dben tsa: *kye rdor rgyud bshad*. NKSB, 23: 1-250.

[952] Kham pa grog ra ba in NKSB, 24: 23, Khams grogs ra in NKSB, 25: 305.

[953] *lHo rong chos ’byung*, 66.

[954] Cher ston bsod nams bzang po: *He badzra’i rnam par bshad pa gsal ba’i sgron me*, NKSB, vol. 25.

[955] See my remarks about Glan ston gsal ’od’s lineage in the part on Mes ston (II.1.3.).

[956] See Etexts search in TBRC.

Ram developed his own tradition, these commentaries do bear some similitude with those of the rNgog tradition; as indeed remarked by ’Gos Lo tsā ba,[957] Kun mkhyen Chos sku ’od zer (1214-1294) composed a treatise showing that both traditions were of the same intention. One possible area of inquiry would therefore be a detailed comparison of the rNgog and Ram traditions based on these old commentaries, as several are presently available in the NKSB and NKCK.

3.1.5.2. sPa lBa ba can

> sPa sBa ba can *(from Ri bo)*, being [mDo sde’s] maternal uncle, paid him great respect with both teachings *(on Nāmasaṃgīti and so on)* and material things. When he passed away, it is said that lama [mDo sde] led the cremation as taught in the fifteenth chapter of the *Pañjara*).

rNgog Chos rdor’s second main disciple was called sPa lBa ba can, “the one with a goiter from the sPa clan.” He was Chos rdor brother-in-law, i.e. the brother of his wife dPa’/sPa mo chos mo, and was also from Ri bo. Chos rdor advised his son to study *Nāmasaṃgīti* with him, so this was probably the transmission he specialized in. The *Nāmasaṃgīti* transmission was cherished by Chos rdor, who studied it at several occasions with various masters. In particular, he invited Khams pa Shes rab rdo rje to spend a year at Ri bo and teach the *gSang ldan* tradition of *Nāmasaṃgīti* that he held from Smṛtijñānakīrti’s disciple. As a resident of Ri bo, lBa ba can probably attended these teachings, and was therefore an appropriate master to transmit the initiation to his nephew.

People with goiters seem to have been numerous in 11th century Tibet, as Mar pa also had two such-named disciples.[958] Although, in some cases, a homonymy may refer to the same person, it is doubtful in the present case that the three disciples with goiters refer to only one person. It remains likely that Chos rdor’s brother-in-law with a goiter received Mar pa’s teachings when the translator was invited to gZhung.

3.1.5.3. rDog Mun ba can and dMyal pa rDog chung pa

The *Rosaries* and the *mKhas pa’i dga’ ston* state that Chos rdor had four main disciples (Ram rtsan can, rDog Mun pa can, sPa lba ba can, and Sum pa Phod kha can). In the *Deb ther sngon po* and *lHo rong chos ’byung*, six disciples are mentioned, one of them called gNyal pa rNgog chung ma can. The *Rosaries* also mention him, as Chos rdor advises his son to study *Saṃputa* with dMyal pa rDog chung ba, but he does not figure in the list of his disciples.

I am not sure whether the two names refer to one or two persons, and whether he or they belong to the rNgog or rDog clan at large. The first question is difficult to settle as not much

---

[957] *Deb sngon*, 492.

[958] Mar pa may have had two students with goiters. Their names differ in the various versions, but basically, if one takes the second dPa’ bo’s orthography (dPa’ bo II, 134), one was from sMyal (= gNyal), and was called Shud sgom lBa ba can (he pleased Mar pa with his realization), and the other was from Ba rang in La yag (he was one of the four disciples with devotion).

is known about either of them, but as Chos rdor advises his son to study *Saṃputa* with dMyal pa rDog chung and *Mahāmāyā* with rDog Mun pa can, it is likely that they are distinct.

The family name of these masters differs in the various versions. Mun pa can is called rTog in ST1, and sDog or rTog in ST2.[959] He is called rNgog Dad pa can in the *Deb sgnon*,[960] and rNgog Mun pa can in the *mKhas pa'i dga' ston*.[961] The same ambiguity occurs for gNyal pa rNgog chung, called dMyal pa rDog chung ba in ST1, rTog chung pa in ST2, but rNgog in most other versions (Bu ston and Ngor chen's records of teachings received for instance). That ambiguity is understandable, given the proximity of the letters *ta*, *da* and *nga* in cursive script. As, however, the name rNgog *never* appears in the *Rosaries* to refer to Chos rdor's disciples, we may conclude that these disciples were not considered to be part of the rNgog family.

As seen above, the same problem occurs with rDog Mu ni (*Nyi ma seng ge*) and his son rDog Āryadeva (*'Phags pa skyabs*). There is no mention in the rDog history or in the *Rosaries* of any relationship between rDog Mu ni and rNgog Chos rdor, and rDog Mu ni was in all likelihood much younger than Chos rdor (maybe born circa 1100). Given those dates, it is difficult to equate Chos rdor's disciple rDog Mun pa can with rDog Mu ni. Although indeed the name Mun pa can "the one with darkness" is difficult to account for and could be a misreading of *mu ni*, it is not *Guhyasamāja* but *Mahāmāyā* that Chos rdor advised his son to study with rDog Mun pa can. The name rDog Mun pa can reappears among the teachers of Jo Thog, mDo sde's second son, who studied *Guhyasamāja* of the Noble tradition with him. In that case, and as rDog Mu ni was a *Guhyasamāja* expert, it is possible that the name Mun pa can refers to him. I cannot explain why the same name is used twice for different people in the *Rosaries*.

The identity of dMyal pa rDog chung ba is slightly clearer than that of Mun pa can.

> After completing all the funerary farewells and the rest, [mDo sde] went to dMyal pa rDog chung pa's place. The latter said: "My master's son has come!" and he installed him on a throne, paying him great respect, and also teaching him well the Dharma.[962]

The region of dMyal/gNyal is quite far from gZhung, to the south of Dwags po and to the east of lHo brag, and was one of the administrative district of the g.Yo ru. The teachings transmitted during mDo sde's visit are not recorded with any precision. It is strange, however, that Chos rdor advised his son to study *Saṃputa* with his disciple, as he himself was not

---

[959] Respectively ST1, 11.8 & 23.5; ST2, 36.8 & 49.2.

[960] *Deb ngon*, 491.

[961] *mKhas pa'i dga' ston*, 777.

[962] ST1, 12.4; ST2, 37.2.

known for that transmission. It is possible that *Catuṣpīṭha* is meant, as "gNyal pa rNgog ston" appears in a lineage of *Catuṣpīṭha* received by Ngor chen Kun dga' bzang po:[963]

> As for the lineage of the male and female [forms] of *Catuṣpīṭha*: […] Āryadeva, Tilo, Nāropa, Mar pa, rNgog Chos rdor, gNyal pa rNgog ston, rNgog Chos tshul [< Jo tshul?], rNgog kun rdor [< Kun dga' rdo rje], rNgog gzi brjid, […]

It could also have been *Pañjara*, as Bu ston states that mDo sde studied this explanatory tantra of *Hevajra* together with three of his father's disciples, sPa, rNgog and rGya.[964]

Not much is known about Chos rdor's other disciples, except in some cases their place of origin and the teachings they specialized in.

- **Sum pa Phod kha can**

Nothing is known about the fourth main disciple, "the one with a wide-sleeved gown from the Sum pa clan." Given his name and origin, he must have been quite wealthy.

- **rGya 'A ma can**

rGya 'A ma can from Shab is mentioned as one of Chos rdor's four main disciples in Bu ston's record of teachings received,[965] where he stands as one of the three masters who gave the transmission of *Pañjara* to mDo sde. He also appears in a lineage of *gSang ldan* received by Bu ston.[966] The name rGya 'A ma can means "rGya with a mother." The Shab area is located in Western gTsang, near Sa skya. Not much more is known about him. He may be the one from the rGya clan who requested Phu na ratna (bSod nams rin chen?) to write a commentary on *Pañjara* that figures in the NKSB, although the identity of the three persons mentioned in the colophon remain rather unclear, and the rGya clan was a large one at the time.[967]

- **lHo pa Chung ma can**

Another master listed is lHo pa Chung ma can, "the southerner with a wife." Nothing else is known about him. From these names, we may observe that sobriquets were widespread at the time, or at least within Chos rdor's circle.

---

[963] *Ngor chen thob yig*, 326 (*rdo rje gdan bzhi'i yab bka' dang yum bka'i brgyud pa*).

[964] Bu ston *gSan yig*, 109.

[965] Bu ston *gSan yig*, 109.

[966] Bu ston *gSan yig*, 126. The same lineage is repeated in the *lHo rong chos 'byung*, 66.

[967] *rDo rje gur gyi Tikka*, NKSB, 18: 83: *sgrol mas byin brlabs ming ni tai lo pa/ /de'i man ngag legs gnas nA ro pa/ /de'i zhabs kyi rdul gus lho brag pa/ /de mnyes byas pa'i dge slong rdo rje grags/ /de'i gdams ngag legs gnas phu na ratna/ /gus dang ldan pas rgya ston gsol btab pas/ /phan pa'i bsam pas yi ger bris pa yis/ /sems can thams cad 'di don rtogs par shog/*. See Vitali 2004 for some detail on the rGya family in Bhutan, and Haoran Hou's forthcoming dissertation on Gtsang pa rgya ras.

To conclude, we can note that although Chos rdor is the first member of the rNgog hereditary lineage and is relatively well-known because of his relationship with Mar pa and Mi la ras pa, he did not spread largely Mar pa's teaching and does not figure in any lasting lineage apart from mDo sde's. In fact, although his name figures in almost every bKa' brgyud history or biography on a par with that of Mes ston and mTshur ston, it is likely that he would not have left much trace had it not been for the active role mDo sde played for the establishment of the rNgog in the Tibetan religious landscape.

3.2. rNgog mDo sde

Chos rdor's only son, rNgog mDo sde, inherited his transmission and became the greatest proponent of Mar pa's tantric legacy in 12th-century Tibet. mDo sde was very learned, as he received all his father's tantric transmissions and relied on many translators of the time. He had a long life and was a towering figure of 12th-century's Tibet, although he knew his share of highs and lows. He secured, for instance, relics of Mar pa and related masters, made his father's transmission flourish, and was a prolific writer, under the name Zhe sdang rdo rje. At the same time, although he had six children, they all died before him, and his legacy was only safeguarded by his grand-children.

3.2.1. Past life and rebirth as Chos rdor's son

> In his past life, Lama mDo sde was in gTsang a mKhan po named sPug Ye shes rgyal. After his death, when fire was set to the corpse, a green light [11] appeared from within the pyre and went down towards the East. Everyone witnessed that, and a nun called Jo mo sgre mo, a two-hundred-year-old wisdom-*ḍākinī*, said: "Our mKhan po will be born in the middle of Bye ma in Ngam shod, as the son of either lama Mar pa or lama rNgog gZhung pa." It is said that on the following year, he was born (in a nomad's place in the Zho valley) as the son of his father, master Chos rdor, and his mother, dPa' mo chos mo. His father made his horoscope according to *Catuṣpīṭha*, which indicated that he would become a meritorious one (famous in dBus, gTsang and Khams).[968]

The *Rosaries* start mDo sde's life story with the story of his past life as the mKhan po sPug Ye shes rgyal from gTsang, sometimes also called sPug Ye shes rgyal mtshan.[969] The identity of this individual is not clarified in our text. There exists, however, interesting parallels with a 9th century Tibetan Zen monk by the name sPug Ye shes dbyangs.[970] The text declares that he

---

[968] ST1, 10: 8-11: 3; ST2, 35: 7-36: 2; *Deb dmar*, 76; *lHo rong chos 'byung*, 53; *Deb sngon*, 491 (BA, 406); *mKhas pa'i dga' ston*, 777.

[969] ST2, 35.7: *ye shes rgyal mtshen (yees rgyen)*; *Deb dmar*, 63.

[970] Van Schaik 2015, 163-174, and esp. pp. 173-174 for a translation of his short life-story. This biography is from PT 996. See also Heller 1994: sPug Ye shes dbyangs was the principal donor for two inscriptions and images commemorating Tibeto-Chinese negociations carved in the early 9th century (see especially Heller 1994, appendix 1, 12, n. 16).

took ordination during the reign of en emperor, probably Khri Srong sde btsan like his master before him. When he dies, at eighty, a cloud of five colours appears in the sky, where it hovers for a few days. Although this monk came from A mdo, it cannot be excluded that he was the master of Jo mo sgre mo, who is considered to be more than 200 years old. The *Rosaries* state that during Ye shes rgyal's funeral, all in attendance saw a green light rise from the pyre and fly towards the east. The place where the funeral took place is not completely clear. It is probably in gTsang as he is associated with this region, as is Jo mo sgre mo who stays at a place called Chu mig or Chu mig ring mo. A place with that name is found south of the gTsang po near sNar thang, due West of the gZhung valley.

Among the disciples present at the funeral was Jo mo sgre mo,[971] who plays a great role in shaping mDo sde's life. In ST1, she is said to be a two-hundred-year-old wisdom *ḍākinī*, but her age is dropped in ST2. Her name appears several times in the *Deb ther sngon po*, and her case was studied by Dan Martin in an article on 11th and 12th-century Buddhist women.[972] 'Gos Lo tsā ba states in the part on mDo sde[973] that sGre mo was a *siddha* who had received many esoteric teachings from Vimalamitra. Earlier, in the part on rNying ma teachings,[974] he talks of a *bhikṣunī* called sGre mo, coming from Rong chu tshan, who had been Vimalamitra's disciple, and whose student was called Mar pa Shes rab 'od. Although Shes rab 'od's flourish is not known, he is said to have taught sGro sbug pa, who was born in 1074. Thus, according to 'Gos lo, she had a very long life, between Vimalamitra, who lived at the time of Khri Srong lde btsan (c.742-c.796),[975] and the late 11th century.

Dan Martin draws a parallel between that rNying ma *ḍākinī*, and a Jo mo bGres mo mentioned in one of Ras chung pa's biographies,[976] said to be a *siddha* from gTsang who received Ras chung pa's teaching. According to him, the name, the fact that she was a *siddha* and her place of origin gives credence to the possibility that it is the same person that is referred to as Vimalamitra's disciple, Ras chung pa's disciple and mDo sde's "prophet." In the *Mkhas pa'i dga' ston*, gTsug lag phreng ba also states that she was a student of Ras chung pa.[977] An indication pointing to that possibility is the fact that later in the *Rosaries*, sGre mo presents mDo sde with relics of Mar pa's bones and Mi la ras pa's hair and nails, which she may have obtained from Ras chung pa. Given her putative age and the fact that she may have received relics from Ras chung pa, it is possible that the relationship was mutual, and that Ras chung pa also received teachings from her. 'Gos lo also mentions in the *Deb ther sngon po* a woman with that name who offered to Atiśa the image of a turquoise boy riding on a horse made of

---

[971] She is called Jo mo sgren mo in ST2, 35, but Jo mo sgre mo in the *lHo rong chos 'byung* (e.g. 53) and in the *Deb sngon* (e.g. 493-494). This may be an indication that their common source is the ST1.

[972] Martin 2005, 58-59. See also the online version of that article with the names in wylie rather than transliterated: https: //sites.google.com/site/tiblical/woman-illusion#_ftn25, accessed 2015.03.03.

[973] BA, 409; *Deb sngon*, 494.

[974] BA 126; *Deb sngon*, 162. She is also mention later: BA, 171; *Deb sngon*, 216.

[975] See his biography in http: //www.treasuryoflives.org/biographies/view/Vimalamitra/9985, accessed 2015.03.03.

[976] *Rwa lung dkar brgyud gser phreng*, 1: 217. On p. 222, she is called *gtsang gi jo mo bgres mo*.

[977] *mKhas pa'i dga' ston*, 1: 778.

gold.[978] She may therefore have been quite an important character in the late 11th century, one who did not completely escape the traditional historians' net, although, considering the numerous mentions of her name, she would have been much more famous as a man.

In mDo sde's life, she is pictured as playing a central role, announcing his birth, foretelling the coming of his first child, and granting him relics that established the rNgog's reputation. As far as the prediction of mDo sde's birth is concerned, when seeing the green light flying towards to east, she predicted that her master would be reborn as either Mar pa's or rNgog gZhung pa's son. The two possibilities may be an allusion to the fact that mDo sde, "Set of Discourses," was also the name of Mar pa's son Darma mdo sde, and also a way for the *Rosaries* to further the identification of rNgog mDo sde as Mar pa's spiritual son. dGe ye Tshul khrim seng ge remarks in in his religious history that Chos rdor named his son mDo sde in reference to Mar pa's own son, but this does not figure in other sources.[979]

sGre mo foretells the rebirth of her master in Ngam shod.[980] This was the name of a region in lHo ka, corresponding roughly to the central part of the g.Yo ru, along both banks of the gTsang po, west and east of bSam yas.[981] gZhung is part of this area, but lHo brag is not. I am not quite sure what is referred to by the term *bye ma'i sbubs* in ST1, or *bye ma'i dbus* in ST2. This may be a toponym, or an allusion to the place where mDo sde was born, which, in a note in ST1, is said to be *zho lung tshes par*. This is rephrased as *zho lung mtsher sar* in ST2, i.e. a "nomadic dwelling place (*mtsher sa*) in the Zho valley." This toponym may refer to a pasture where Chos rdor and his wife had established their camp, maybe near the gTsang po, which has some sandy dunes, or somewhere in the gZhung valley.

The birth took place in a horse year, 1078 according to the *lHo rong chos 'byung*, 1090 according to the *Deb ther sngon po.* Chos rdor calculated his son's astrological chart on the basis of the *Catuṣpīṭha*'s system of astrology. It is not well-known in Tibet as it was completely overtaken by the *Kālacakra* astrological system,[982] but Mar pa and Chos rdor are not known to have received this transmission. They were experts in the *Catuṣpīṭhatantra*, which developed independent theories of calendar and fortune-telling. This system has not been much studied, except in two articles by Tsunehiko Sugiki.[983] In the first, "Astrology in Mother-Tantric Literature," he makes a short comparative study of the systems of astrology in accordance with the time of birth in the *Vajraḍākatantra* (from the *Cakrasaṃvara* cycle) and the *Catuṣpīṭhatantra*, which influenced the former. The second article is about the "Cycle of Time, Calendar, and Fortunetelling in the *Catuṣpīṭha* and the *Cakrasaṃvara* Buddhist Literatures." It presents in more details the systems derived from this tantra and, in particular,

---

[978] BA, 256.

[979] *dGe ye History*, 30b5. Roerich also states in BA, 408: "It seems that he had been named after the elder son of Mar-pa who had been his father's teacher."

[980] Spelled Ngams shod in ST2, 35: 8.

[981] See a description of what this toponym refers to in Sørensen and Hazod 2007, n. 597, 222, and a map in *ibid.*, 23

[982] See Henning 2007 for an explanation of the system, and the companion website: http://www.kalacakra.org/calendar/kcal.htm, accessed 2015.03.04.

[983] Sugiki 2003 and 2005.

fortune-telling according to the day of birth. Sugiki translates the predictions given in the *Catuṣpīṭhatantra* according to each of the twelve days of birth. None, however, indicate specifically that one would be "a meritorious one famous in dBus, gTsang and Khams," as in ST1, nor "a meritorious one, holder of the secret mantra and famous as far as the river Ganges," as in ST2, although the sixth day, *makara*, may correspond.[984]

3.2.2. Education

3.2.2.1. Mar pa and his father

From an early age, mDo sde was in contact with the Dharma and received transmissions from Mar pa and his father, especially *Hevajra*. When he was four, Mar pa insisted that he attend his empowerments of the nine-deity *Hevajra* and fifteen-deity *Nairātmyā* maṇḍalas, although, as most children of that age, he caused havoc during the transmission by climbing on Mar pa's and his father's backs and by pulling their beards. That transmission, despite the heir's young age, established a direct link between Mar pa and mDo sde, which was crucial for the ensuing lineage as Chos rdor died when his son was only twelve. By that time, mDo sde had learned the *Two Segments* and knew who to turn to in order to further his training. Chos rdor also gave his sister a few articles that she was to hand over to mDo sde at his majority, making sure that his son received everything he needed to ensure his lineage's continuation:

> Later, upon leaving for Kechara, in his testament [Chos rdor] bequeathed to a nun [12] a book-case with a blue lining together with a felt bag with a blue lining. He told her:
> "When mDo sde will turn eighteen, he will become one who makes himself as well as others learned in the Dharma. At that time, hand these two over to him, but do not show them to anyone else![985]
> […]
> Then, when [mDo sde] was in his eighteenth year and learned in the Dharma, the nun handed him over the book-case and the felt bag. He said that in the book-case he found what is known as the *Two Segments of the rNgog Tradition*, and in the felt bag the instructions known as the six doctrines of Nāropa.[986]

In the book-case and bag were concealed the heart of the rNgog tradition. In the case, mDo sde found the "*Two Segments* of the rNgog Tradition." This refers to Chos rdor's notes on Mar pa's oral transmission of the *Hevajratantra* called the *Jewel's Ornament* (*Rin po che'i*

---

[984] Sugiki 2005, 179-194, esp. p. 186: "He will be virtuous / He will be a man of good conducts / He will keep his moral obligation / He will be rich / He will be handsome / He will have good fortune and honour / He will be skilled in every kind of handcraft / His only wife will be excellent / He will be slow-thinking / He will achieve together with his kinsmen / He will talk pleasant words to everyone."

[985] ST1, 11.8; ST2, 36.8.

[986] ST1, 12: 7-8; ST2, 37: 7-8.

rgyan).[987] In the felt bag, mDo sde found the six doctrines of Nāropa, key-instructions on the six practices as they are taught in the *Hevajratantra*, known as merging and transference (*bsre 'pho*) in the rNgog pa lineage.

3.2.2.2. His father's students

As we saw in the section on Chos rdor's students, several of them were instrumental in passing on to mDo sde his father's teaching. More particularly, he received *Nāmasaṃgīti* from his uncle sPa lBa ba can, *Mahāmāyā* from rDog Mun pa can, and *Catuṣpīṭha* from dMyal pa rDog chung.[988] mDo sde also conducted the funeral of his father and his uncle lBa ba can. This shows that he was considered the main master in the family, and Chos rdor's rightful heir, despite his young age.

3.2.2.3. Lo tsā bas

> ST1: Thus is he said to have much studied [the paths of] mantras and of characteristics with eight translators.[989]

From Mar pa, Chos rdor and his disciples, mDo sde received the "rNgog's teachings" (*rngog chos*), that later came to be known as the "seven maṇḍalas of the rNgog." These transmissions, together with *Dud sol ma*, represent the bulk of his written work, and were the essential teachings for which the rNgog pa lineage came to be known and respected. mDo sde, however, did not content himself with only perpetuating his father's legacy, and he rounded off his teaching offer by receiving from other masters what he did not inherit, most notably practices related to wealth deities and yoga tantras. He established religious links with several of the translators that abounded in late 11th- early 12th century Tibet—some of them well-known, some now forgotten—a sure sign of who was considered legitimate at the time.

If one is to believe the presentation in the *Rosaries*, there are two periods when mDo sde studied with translators. First, following his father's death, he went to visit Chos rdor's disciples in order to receive their teachings. At that time (the very end of the 11th century), he also met Chag Lo tsā ba, Bya Lo tsā ba, Rwa Lo tsā ba and Pa tshab Lo tsā ba, the latter two being towering figures of the time. Later in his life, after he had his first child and built the reliquary in gZhung, he met with Shud bu Lo tsā ba, 'Chi ru'i snyan chung Lo tsā ba, Zangs dkar Lo tsā ba and Ba ri Lo tsā ba.

---

[987] See above part I.2.2. for the polemics concerning this text considered by some to be lost and replaced by mDo sde *Rin po che'i rgyan 'dra*.

[988] As mentioned in section II.3.1, the *Rosaries* state that mDo sde received *Saṃputa* from dMyal pa rDog chung, but it is more likely that it was *Catuṣpīṭha* as a gNyal pa rNgog ston appears in a lineage of *Catuṣpīṭha* received by Ngor chen Kun dga' bzang po (*Ngor chen thob yig*, 326).

[989] ST1, 13.8. The sentence differs in ST2, 39.2: "In short, he relied on ten lamas who were all Lo tsā bas, headed by the Great Venerable [Mar pa] and received many teachings on mantras and on characteristics." *mdor na rje btsun chen pos thog grangs pa'i lo tstsha ba kho na'i bla ma bcu rtsam brten/ sngags mtshan nyid kyi chos kyang mang du zhus*.

As far as the transmissions received outside of the family are concerned, three types can be highlighted. First are yoginītantra transmissions that Chos rdor did not inherit from Mar pa. mDo sde received *Saṃpuṭa* from Chag Lo tsā ba and Rwa Lo tsā ba. He also received *Vajravārāhī* from Rwa Lo tsā ba.

Second are practices associated with the wealth deities Jambhala and Vasudhārā, that mDo sde received from several translators. They are also missing in Mar pa's range of transmissions, although they can understandably be deemed important by a family trying to impose its transmission in a competitive environment.

Third are yoga tantras. Chos rdor completed Mar pa's offer by receiving thoroughly from several masters the yoga tantra interpretation of the *Nāmasaṃgīti*, as well as other, indefinite yoga tantras. His son additionally requested other well-known yoga tantras such as the *Compendium of Principles*.

In the following section, details about each of mDo sde's masters are provided, sometimes with some uncertainty on their identity, together with a short life story and an outline of the teachings they were known for. The aim of this section is to shed some light on the type of religious interactions mDo sde had with other masters, thus understanding his socioreligious circle.

Chag/Phyag Lo tsā ba

> He received Black Jambhala and *Saṃpuṭa* as well as a few minor transmissions from Chag Lo tstsha ba (gTsang pa Shes rab 'bar)(and offered to him a painted saddle).[990]

The identity of this Chag Lo tsā ba is unclear. In ST1, the orthography is Chag, but Phyag in ST2. There is one very famous translator with that name (with the similar double spelling), namely Chag Lo tsā ba Chos rje dpal, who lived in the early 13th century (1197–1263/4), far too late for mDo sde to study with him. The *lHo rong chos 'byung*[991] states in a gloss that the Chag Lo tsā ba in question was Chos rje dpal's uncle, called dGra bcom. According to the *Deb ther sngon po*,[992] Chag dGra bchom Tshul khrims shes rab was born in 1153, hence again too late for mDo sde (1078-1154/ BA: 1090-1166). ST1 glosses the name of this translator as "Shes rab 'bar from gTsang" (but ST2 does not endorse that gloss). There is a master who lived at the turn of the 12th century who could correspond to that claim: 'Bre Shes rab 'bar, from the Myang district in gTsang, who was a disciple of rNgog Blo ldan shes rab as well as of Yol Chos dbang, who passed on to him the abbacy of the gNas gnying Monastery in Myang stod.[993] This gNas rnying abbot was a bKa' gdams pa master, not especially known as a translator, so it seems rather difficult to ascertain whether he could be mDo sde's master.

---

[990] ST1, 12: 5-6; ST2, 37: 6.

[991] *lHo rong chos 'byung*, 53.

[992] BA, 1054.

[993] Vitali 2002, 94-95.

The master in question may simply be a translator of the Chag family who lived prior to Chag Lo tsā ba Chos rje dpal and his uncle, but whose fame did not endure.

The transmissions mDo sde received from Chag Lo tsā ba are also slightly uncertain, as the spelling in the *Rosaries* alternate between *'dzam nag* (presumably for *dzam nag*, Black Jambhala) and *'jam nag* (Black Mañjuśrī).[994] Both transmissions of Black Jambhala with two arms and Black Mañjuśrī with two arms were popularized in Tibet by Ba ri Lo tsā ba Rin chen grags (1040-1112), but one finds no text on the topic in the NKSB. As mDo sde is said to receive the transmission of Vasudhārā (*nor rgyun ma*, Jambhala's consort) from Shud bu Lo tsā ba, it seems safe to settle on Black Jambhala, despite the *Rosaries*' spelling with a prefix *'a*.

Chag Lo tsā ba also gave mDo sde *Saṃpuṭa* and other minor, unnamed instructions. This master and the transmissions associated with him are omitted in the *Deb ther sngon po*, although the lineage of Black Jambhala is mentioned in both *Rosaries*.

One last remark concerns the phrase *zhus gsung* concluding the sentence, which could be translated as "[he] said that he requested." The locutor, treated honorifically, is not identified. The phrase is repeated for all transmissions in ST1, but not in ST2, where the first occurrence is given as *zhus gsung*, and is then followed by *zhus*. There are two possibilities that could explain that verbal form: it could either be an indirect speech (i.e. the author refers to an outer locutor who informed him about mDo sde's masters), or, more simply, an honorific form of *zhus*, meaning "he requested," without specific mark of an indirect speech. I settle with the second possibility in my translation ("He requested"), but the first ("He said", or "someone said," that he requested") could also be considered.

Bya Lo tsā ba

> He also received minor transmissions from Bya Lo tstsha ba (dMyal pa Zla ba 'od zer).[995]

This Bya Lo tsā ba, called Ja lo tstsha ba in ST2, is also difficult to pinpoint. He is not mentioned in the *lHo rong chos 'byung*, but is called gNyal gyi Bya lo Zla ba 'od zer in the *Deb ther sngon po*. Given his name, he supposedly came from the region of dMyal/gNyal, one of the three making up the Dwags po, to the east of gZhung.[996] His clan was that of Bya. There is one famous translator called Zla ba'od zer, namely Gyi jo Lo tsā ba Zla ba 'od zer, who introduced the *Kālacakratantra* to Tibet in the beginning of the 11th century, but given his fame, his proper name would be mentioned if he was the one meant here. This Bya lo gave several minor transmissions to mDo sde.

---

[994] ST1, 12.5 for instance.

[995] ST1, 12.6; ST2, 37.6.

[996] Sørensen and Hazod 2007, 175-176.

Rwa Lo tsā ba

> [He received] *Saṃpuṭa* and *Vajravārāhī* of the Ra Tradition from Ra Lo tstsha ba (rDo rje grags).[997]

Rwa Lo tsā ba was shortly mentioned above, in the framework of the putative transmission of *Saṃpuṭa* received by Chos rdor. It was argued that it is unlikely that Chos rdor ever met Rwa lo, and that it was probably only his son, mDo sde, who received *Saṃpuṭa* from Rwa lo. mDo sde subsequently composed a commentary on Rwa lo's tradition of that tantra, later expanded by his son Thogs med grags.[998] Although mDo sde's relationship with Rwa lo is not described in the *Rosaries*, it is quite detailed in Rwa lo's long hagiography, attributed to his disciple's disciple, Rwa Ye shes seng ge but compiled in the mid-17th century in the circle of the 5th Dalai Lama.[999] As the version of event described in Rwa lo's hagiography challenges any peaceful relationship between Mar pa's spiritual heir, rNgog mDo sde, and Rwa lo, I examine it here.

The narrative surrounding Rwa lo's interaction with Mar pa's descendants and disciples start when Rwa lo arrived in rNga mong chu shul.[1000] He was an itinerant master who did not reside in one monastery in particular. In the course of his travels throughout Tibet, he often offended the local masters, who were jealous of his fame and power. On one occasion, he met Mar pa's son, Darma mDo sde, who wanted him to become his student in order to increase his reputation. Darma mdo sde insulted Rwa lo's teacher, Bharo, and his *Vajrabhairava* transmission, considering them non-Buddhist. Rwa lo tried to pacify Darma mDo sde's arrogance by stating that the five tantras mDo sde had received from his father were not complete, while his own transmission of Bhairava contained everything needed to practice. mDo sde felt offended, and entered a one-month retreat on *Hevajra* in order to fire its magic at Rwa lo. He missed his target, but caused the death of Rwa lo's attendant. Rwa lo, although unwilling to kill such a promising master, saw it was necessary to take revenge in order to guarantee his own lineage and to pacify mDo sde's pride. He thus asked Bhairava to bring him his life-force, and as a result mDo sde died falling off a horse on the next day.

This description is, of course, not to be found in Mar pa's biographical tradition, and especially not in gTsang smyon He ru ka's version, where another story is told at length:[1001] according to him, Darma mdo sde died falling off a horse after he went to a party in rNga mong chu shul, disobeying all of his mother's orders, while his father was still alive. This passage in gTsang smyon's work figures among the two in which the author clearly added the most to the existing material. In Mar pa's early biographies, although it is clear that his

---

[997] ST1, 12.6; ST2, 36.7.

[998] "dPal sambu ṭa'i rnam bshad gzhung gsal ba'i sgron ma." In NKSB, 5: 88-253.

[999] Cuevas 2015b.

[1000] *Rwa lo rnam thar*, 210-213; Cuevas 2015a, 190-195.

[1001] Tsangnyön 1982, 156-181.

familial descent is not successful,[1002] there is no further elaboration, especially not about Darma mdo sde's death. It was probably rGyal thang pa who initially picked up this motif,[1003] which was gradually expanded, notably by Zhwa dmar mKha' spyod dbang po in the late 14th century,[1004] and became famous in gTsang smyon's version.

In his *Yamāntaka Religious History*, Tāranātha refutes both versions, though more radically gTsang smyon's, and considers that mDo sde did not die before his father.[1005] He states that these stories (Rwa lo's killing of mDo sde in Rwa lo's biography and gTsang smyon's description of his death), no matter how widespread they were during his days, are false. It remains, however, that gTsang smyon's version (1505) certainly echoes Rwa lo's. Thus, even though the 17th-century account did not exist in this form yet, there must have been some stories surrounding Rwa lo's killing of mDo sde that circulated in the early 16th century and to which gTsang smyon was reacting. According to Cuevas, the tale could have been an innovation of the partisans of Tsong kha pa—a devout practitioner of Vajrabhairava, the wrathful form of Mañjuśrī—in their attempt to develop the nascent dGe lugs pa order amidst growing tensions with other orders, especially the Karma bka' brgyud one, which had deep roots in gTsang and was notoriously hostile to Tsong kha pa's faction in dBus.[1006]

This story of Rwa lo's killing of Darma mdo sde thus tells us more about 15th to 17th-century Tibet than about Rwa lo's and Mar pa's time. It may not be devoid of any historical basis, however, especially regarding chronology. In Rwa lo's version, it is clear that Mar pa had already passed away when Darma mdo sde died, as the one in charge of Gro bo lung was his descendant, Mar pa bSod nams rin chen. Shortly afterwards, Rwa lo went to gZhung in order to pay his respect to Mar pa's reliquary.[1007] At this point, the narrative is anachronic as it refers to mDo sde's seat as "gZhung sPre zhing," which was built by rNgog mDo sde's grandson Kun dga' rdo rje (1145-1222) and was therefore not there at Rwa lo's time. According to Rwa lo's *rnam thar*, Mar pa's disciples tried to prevent Mar pa's son's murderer from approaching the relics, but Rwa lo went through the walls, and relics felt from the reliquary onto his lap. Mar pa's followers were still not convinced and tried to stop him, but Rwa lo used his magic to refrain his detractors. Eventually, rNgog mDo sde gained faith in him, and invited him to the hermitage (*mgon pa*) of Ri bo khyung lding, where he honored

---

[1002] See the prophecy by Nāropa that Mar pa's "familial lineage would disappear like a celestial flower, but his Dharma lineage would reach as far as a river flows." (Ducher 2017, 289) This is present in MKNT, KSTC, "U rgyan pa" and rGyal thang pa (See Ducher 2017 for bibliographical references)

[1003] "Skyab mchog mar pa lo tstsha'i rnam thar." In: *Dkar brgyud gser phreng: a thirteenth century collection verse hagiographies of the succession of eminent masters of the 'Brug-pa Dkar-brgyud-pa tradition*. Palampur: Sungrab Nyamso Gyunphel Parkhang, 1973. p. 176.

[1004] "Chos kyi rje mnga' bdag mar pa lo tstsha'i rnam par thar pa gsang ba mdzod kyi lde mig." In: *Bde mchog snyan brgyud kyi rnam thar skor*. Darjeeling: Kargyud Sungrab Nyamso Khang, 1983. p. 114.

[1005] Tāranātha's *Yamāntaka Religious History* ("rGyud rgyal gshin rje gshed skor gyi chos 'byung rgyas pa yid ches ngo mtshar." In *gSung 'bum dpe dur ma*, 11: 95.) This is translated and studied in Decleer 1992, 23-27. 'Be lo Tshe dbang kun khyab, the author of the *Supplement to the Rosary of Crystal Gems* (*Rosary of Crystal Gems*, 70-71) endorses Tāranātha's view that Mar pa had already passed away when his son died and clearly disapproves of gTsang smyon's version (See translation in Decleer 1992, 26).

[1006] Cuevas 2015b, 72.

[1007] *Rwa lo rnam thar*, 240-246, Cuevas 2015a, 217-222.

him with large offerings. Rwa lo spent them to sponsor rituals and statues in the valley, and gave transmissions to mDo sde. The transmissions are not specified, but can be assumed to be the *Saṃpuṭa* and *Vajravārāhī* cycles, as stated in the *Rosaries*. Consequently, mDo sde is said to have visions of Vajrabhairava and *Vajravārāhī*,[1008] and to gain all kinds of realizations. That later part, a trope in Rwa lo's biography, can surely be considered a later elaboration, but the spiritual bond between Rwa lo and rNgog mDo sde cannot be denied, as it is present in both traditions. As a consequence, the rNgog tradition was enriched by Rwa lo's transmission, especially that of the *Saṃputatantra*, the "common explanatory tantra" of the *Hevajra-* and *Cakrasaṃvaratantra*, considered by some to be missing in the rNgog tradition. Apart from the lineage itself, the encounter between mDo sde and Rwa lo is not described in the *Rosaries*; the only possible reference is found in a quote within Ra mo's lifestory attributed to mDo sde where he states that if he "had a wisdom such as [Jo thog and Jo ra], [he] would not have needed to request teachings from the Black Ra" (ST2, 31.7). As indicated by this quote, it is possible that even though mDo sde received teachings from Rwa lo, there remained some tensions between the two lineages.

sPa tshab Lo tsā ba Nyi ma grags (1055-1145?)

> [He received] minor transmissions such as Black Jambhala and others from Pa tshab[1009] Lo tstsha ba (Nyi ma grags, from 'Phan yul).[1010]

sPa tshab Lo tsā ba Nyi ma grags was born in the sPa tshab district of 'Phan yul[1011] and travelled to Kashmir in his youth, where he remained for twenty-three years, studying Sanskrit and Buddhist texts with the sons of Sajjana and with Mahāsumati. He translated or revised the translation of many texts, mostly associated with the Madhyamaka school and Candrakīrti, and was seen as the inventor of the svātantrika-prāsangika distinction, although he probably inherited it from his Kashmiri masters. He came back to Tibet with the paṇḍita Kanakavarman, settled in 'Phan yul and started to teach the madhyamaka doctrine, with a growing success. The first Karma pa Dus gsum mkhyen pa (1110-1193), for instance, studied it with him.

Although Nyi ma grags's major interest lied in the teaching and translation of Candrakīrti's Prāsaṅgika Madhyamaka texts, he also translated and taught the *Guhyasamāja* commentary attributed to Candrakīrti. He was probably learned in other tantras as well, as rNgog mDo sde is said to receive the transmission of Black Jambhala and other minor transmissions from him.[1012]

[1008] There exist many transmissions of *Vajravārāhī*. Rwa lo received it from his master Bha ro phyag ldum. This probably refers to the *Phag mo mngon 'byung*.

[1009] ST1 and the *lHo rong chos 'byung* have Pa tshab, ST2 and the *Deb sngon* have sPa tshab.

[1010] ST1, 12: 6-7; ST2, 37: 7.

[1011] See BA, 341-343, Lang 1990 and Dreyfus 2010 for information about his life and works.

[1012] The uncertainty mentioned earlier between Black Mañjuśrī (*'jam nag*) and Black Dzambhala (*dzam nag*) must be remembered. I settle for Jambhala although ST1 has *'jam* (but ST2 has *'dzam*).

Shud bu Lo tsā ba

> He received Vasudhārā from Shud bu lo tstsha ba (’Byung gnas rgyal tshan from gTsang).[1013]

The family name of Lo tsā ba ’Byung gnas rgyal mtshan from gTsang is spelled differently in the sources. He is called Shud bu Lo tsā ba in ST1, Shod bu Lo tsā ba is ST2 and Shud phu Lo tsā ba in the *Deb ther sngon po*.[1014] This probably refers to the Shud bu/phu family, generally associated with the region of lHo brag.[1015] One of their ancestor, Shud phu dPal gyi seng ge, figured among Padmasambhava’s twenty-five main disciples, and in the later spread of the doctrine they were connected with both the rNying ma and bKa’ gdams school. None of the well-known Shud phu masters bear the name ’Byung gnas rgyal mtshan. There is one Zla ba rgyal mtshan, who founded the Thig phyi monastery in lHo brag, but as mDo sde’s master is said to come from gTsang, this may not correspond.

It is notable that Shud bu Lo tsā ba gave mDo sde the Vasudhārā (*nor rgyun ma*) empowerment. She is a wealth goddess, has several forms, and is also represented as the consort of Jambhala. mDo sde’s interest in wealth deities may reflect his concern for the development of his estate and family, and the success of his transmission.

’Chi ru’i snyan chung Lo tsā ba

> He received a few minor [teachings] from ’Chi ru’i rNyan chung Lo tstsha ba (Dar ma grags).[1016]

The identity of this translator is rather unclear as the gNyan/sNyan family is quite wide-spread.[1017] According to the name provided in a note in ST1,[1018] this refers to an 11th-century translator, called gNyan (<rNyan) lo tsā ba Dar ma grags. He was a translator who attended the 1076 religious conference together with Rwa Lo tsā ba, and later went with him to India.[1019] He eventually translated many texts in the *bsTan ’gyur* and founded a hermitage called “the Cave of gNyan the Meditator” (*gNyan sgom phug*), to the north-east of lHa sa. gNyan lo found treasures associated with four-faced Mahākāla and other deities.[1020] According to Rwa lo’s biography,[1021] when the two settled in Tibet, gNyan Lo tsā ba became jealous of Rwa lo’s fame and tried to kill him in a magical contest. As in other similar

---

[1013] ST1, 13: 6-7.

[1014] *Deb sngon*, 492; ST2, 38.

[1015] See Ehrhard 2013(1992), 43, n.12 for a short account of masters from the Shud-phu family.

[1016] ST1, 13: 7-8; ST2, 39: 1.

[1017] Roberts 2007, 85. According to some of Ras chung pa’s biography, Mi la ras pa’s disciple was from the gNyan clan, and some call him gNyan chung Ras pa.

[1018] Backed by the *Deb sngon*, which only refers to gNyan lo.

[1019] See Shastri 1997 about this conference and the participation of these two translators, along Zangs dkar Lo tsā ba and others.

[1020] Kongtrül 2011b, 182.

[1021] *Rwa lo rnam thar*, 277-279.

circumstances, Rwa lo was finally victorious over him, and gNyan lo died. gNyan lo seemed to have been an adept of black magic, as he is also pictured as the "liberator" of 'Brog mi Lo tsā ba's son Indra.[1022] If this is indeed the translator meant by ST1, I cannot make sense of the place name 'Chi ru.

ST2 has an alternative name, 'Ching ru'i sNyan chung lo tstsha ba (Dar ma dpal).[1023] Although I did not find any fitting person with the name Dar ma dpal, there is a translator simply called gNyan chung Lo tsā ba, said by several anthologies of Tibetan authors to be born in the early 13th century,[1024] too late for mDo sde to rely on him. His name is not specified, but he may have been in the gCod lineage as he authored a praise to rGyal ba don grub, Ma gcig lab sgron's (1055-1149) son.[1025] He translated several texts in the *bKa' 'gyur* and *bsTan 'gyur*.

Whomever that translator may have been, and like the others in the list, he does not seem to have a clear identity for the authors of the *Rosaries* and later commentators. The minor transmissions he gave to mDo sde did not justify lengthy explanations, and it is likely that his Lo tsā ba status was enough to remember him.

Zangs dkar Lo tsā ba

> He also established a few dharma links with Zangs dkar lo tstsha ba ('Phags pa shes rab from mNga' ris) …

Zangs dkar Lo tsā ba 'Phags pa shes rab was one of the famous translators of the second half of the 11th century.[1026] He was born in mNga' ris in Western Tibet, studied with many paṇḍitas of Kashmir, India and Nepal, and worked both on tantric and non-tantric materials.[1027] He took part in the 1076 religious council, which was attended by several of mDo sde's other teachers and directed the first major renovation of the lHa sa Jo khang, probably in the 1070s or 1080s, as well as renovations in several other temples, including bSam yas.[1028] sGam po pa (1079-1154, a near contemporary of mDo sde if one follows the

---

[1022] Stearns 2001, 213, n. 39. According to Stearns, the main transmission he was associated with was that of four-headed Mahākāla (*mgon po zhal bzhi pa*).

[1023] ST2, 39.1; possibly backed by the *lHo rong chos 'byung*, 54, which has gNya' chung Lo tsā.

[1024] See P6524 in TBRC. Tony Duff's *A Dictionary of Learned and Accomplished Beings of Tibet* also gives that date along standard descriptions.

[1025] "rJe rang byung rdo rjes mdzad pa'i gcod kyi tshogs las rin po che'i phreng ba 'don sgrigs bltas chog tu bkod pa gcod kyi lugs sor bzhag." In *'Don cha nyer mkho phan bde'i bum bzang*, 4: 305-454 (W23685). rDo rje gling: 'Brug sgar dpe mdzod khang, 2001, pp. 358-359. That collection of liturgical texts of the gCod tradition is translated by Tashi T. Jamyangling (unpublished manuscript available online).

[1026] If one is to believe the encounters with others described in the *Deb sngon* (e.g. pp. 324 & 1009), his dates may be around 1050-1115, +/- 5 years.

[1027] He was mainly associated with the transmission of yoga tantras (See his biography in Bu ston's *Yogatantra*, 162-170), but also revised rNgog Blo ldan shes rab's translation of the *Pramāṇavārttikālaṇkāra* during the 1076 religious council (see Shastri 1997, 875 & 880) and was known for his *Cakrasaṃvara* transmission.

[1028] Vitali 1990, 79-80. The renovations are described in the *mKhas pa'i dga' ston*, 1: 447-448.

lHo rong chos 'byung's dates) also studied with him as a youth.[1029] His four main disciples were gNyal pa Nyi ma shes rab, Mar pa rDo rje ye shes, gNyan ston Tshul khrims 'bar, and sByang tshang ba Seng ge rgyal mtshan.[1030] Although it is not specified in the *Rosaries*, mDo sde may have received yoga tantras from him, as this was what he requested from Zangs dkar Lo tsā ba's disciple's disciple sNur Nyi ma 'od (see below).

Ba ri Lo tsā ba

> … and Ba ri Lo tstsha ba (Rin chen grags from Khams).

Ba ri Lo tsā ba (1040-1112) may be the most famous of mDo sde's translator-teachers.[1031] He was born in Khams and travelled to Central Tibet in 1058, where he spent fifteen years. He then journeyed south with a group of pilgrims, and studied sutras and tantras in Nepal and India. His main tantric master was Vajrasāna. He and Amoghavajra selected a hundred *sādhana*s that Ba ri brought back and translated, thus forming one of the early compilations of *sādhana*s, the *Ba ri brgya brtsa*. He returned to Tibet in 1082, and was invited to Sa skya Monastery in 1102, in order to take over the abbacy after the demise of the monastery founder, 'Khon dKon mchog rgyal po (1034-1102). He was also in charge of the education of dKon mchog rgyal po's young son and heir, Sa chen Kun dga' snying po (1092-1158). He handed the throne over to Sa chen in 1110, before dying in 1112. The transmissions he gave to rNgog mDo sde and the place where they met are not specified, but at the turn of the 12th century Ba ri most probably appeared as the one to study with if one was the heir of a nascent tantric lineage.

brNur Nyi ma

> In Bo dong, he completely received the yoga tantras from the *Compendium of Principles* onwards from brNur Nyi ma.[1032]

In addition to these eight Lo tsā ba, mDo sde also studied with brNur/sNur Nyi ma 'od,[1033] who was gNyal pa Nyi ma shes rab's disciple, himself Zangs dkar Lo tsā ba's student.[1034] According to Kong sprul, sNur Nyi ma 'od was at one point one of three principal masters who upheld the yoga tantra tradition,[1035] and his lineage was continued by his four main

---

[1029] Trungram 2004, 38. This affirmation is based on several of sGam po pa's biographies. Davidson 2005, 254, is of the opinion that it was another Zangs dkar Lo tsā ba that sGam po pa met.

[1030] Bu ston's *Yogatantra*, 170.

[1031] See Davidson 2005, 297-299; Davidson based his presentation on bSod nams rtse mo's biography. See also Stearns 2001, 135-137. Stearns notes (*Ibid*, 245, n. 170) that Ba ri Lo tsā ba's most extensive biography is the one by A mes zhabs ("dPal rdo rje nag po chen po'i zab mo'i chos skor rnams byung ba'i tshul legs par bshad pa bstan srung chos kun gsal ba'i nyin byed," 1: 222-234).

[1032] ST1, 13.7; ST2, 39.2.

[1033] ST1 has brNur and ST2 has sNur. The later spelling is also the one for P3382 in TBRC.

[1034] See his short biography in Bu ston's *Yogatantra*, 171.2-172.2. It is followed by a short account of his familial lineage until Bu ston.

[1035] Kongtrül & Ngawang Zangpo 2010, 274.

disciples as well as his son, rDo rje seng ge, who composed numerous texts on the subject.[1036] It may have been at that time that rNgog mDo sde met him in Bo dong.

The place called Bo dong is distinct from the Bo dong E Monastery located along the gTsang po and founded in 1049 by dGe bshes Mu tra ba chen po, which later became the seat of the Bo dong tradition. The place where mDo sde went to receive sNur Nyi ma ’od’s teaching is located in the Lower Shab (*shab smad*) valley, in gTsang. According to ’Gos Lo tsā ba, a monastery was built there by Zangs dkar Lo tsā ba,[1037] and it is likely that sNur Nyi ma ’od later took charge of the place. A neighboring monastery, Khro phu Monastery in the Shab valley, was founded by rGyal tsha Rin chen mgon po (1118-1195), who studied as a youth with sNur Nyi ma ’od, and later with rNgog mDo sde.

The *Compendium of Principles* (*De nyid ’dus pa*)[1038] that mDo sde received from Nyi ma ’od is the first and preeminent tantric text comprising the *Vajroṣṇīṣa Yoga* cycle, a set of eighteen yoga tantras.[1039] As Steven Weinberger notes,[1040] the yoga tantras were central in the Tibetan Empire, as the royal Vairocana cult associated with several of these texts suited the pre-existing Tibetan conception of a divine kingship. Although this consideration is not apparent in the *Rosaries*, it is striking that both rNgog Chos rdor and mDo sde, descendants of a wealthy and powerful family of Central Tibet, went out of their way to receive yoga tantras that were not included in Mar pa’s endowments. One reason may be this long-standing association with Tibetan kingship, another their success in the 10th and 11th century, fuelled by a widespread concern for a more conservative approach to tantra balancing the antinomian outbursts characterizing the dark period that followed the collapse of the Empire as well as the more explicit mahāyoga and yoginītantras widely spreading at the time. Although the yogatantras quickly lost their prominence to these later tantras, it is possible that the rNgog wanted to complete their transmission with these symbols of the royal power of old as well as of the revival of tantric Buddhism in Tibet.

[1036] BA, 354-355.

[1037] *Ibid.*, 1009.

[1038] *Sarvatathāgatatattvasaṅgraha*; *De bzhin gshegs pa thams cad kyi de kho na nyid bsdus pa*. Tōhoku. 479. According to Dan Martin’s *Tibskrit*, this title is often abbreviated as *De nyid ’dus pa* (as in the *Rosaries*) but a more correct form would be *De nyid bsdus pa*.

[1039] See Weinberger 2010 for a presentation of the yoga tantras and the social context of their transmission to Tibet. This article derives from his PhD dissertation (Weinberger 2003), where he presents the history of yoga tantras developed in India and Tibet. During the later spread, yoga tantras were reintroduced in the late 10th century by Rin chen bzang po and later by Zangs dkar Lo tsā ba. They progressively lost some of their importance, but were revived by Bu ston Rin chen grub in the early 14th century. He wrote their history (Bu ston’s *Yogatantra*), which is the basis of Weinberger’s presentation.

[1040] Weinberger 2010, 140-141, inspired by Kapstein 2000, 60-141.

Ram rtsan can

> When [mDo sde] arrived at Ram's place at 'O yug, there was a feast and so they chatted. Being slightly unhappy about that, [mDo sde] said that he did not request a dharma-link.[1041]

Ram rtsan can from Klu gong was one of rNgog Chos rdor's most important disciples. As indicated in the *Rosaries* and the *Deb ther sngon po*,[1042] Chos rdor instructed his son to study *Hevajra* with Ram. Accordingly, mDo sde proceeded to 'O yug in gTsang to meet with his father's disciple and receive his teachings, but he was not happy with the meeting and returned home to study *Hevajra* with his family.

What exactly went wrong is unclear, but this is a recurring event in Chos rdor's and mDo sde's life. Chos rdor turned down Sum pa Ye shes 'bar because he was not pleased by their meeting, and similarly mDo sde turned down Ram and Ras chung pa (see below). In the case of Ram, that gesture is even stronger as it goes against Chos rdor's instruction and, according to the *Deb ther sngon po*, had a strong impact on the continuation of both the rNgog and Ram traditions of *Hevajra*. Despite this split, a Ram rDo rje grags from Klu gong was mDo sde's student and figures in the lineage of the *Vajrapañjara* (see below).

Ras chung pa

> When he went to Ras chung pa's place, [Ras chung pa] *taught [life]-stories*. He did not tell Mi la's story but *only gave accounts* about Tipupa. [Today] was a little uneasy and did not start a Dharma relationship at that time.[1043]

The biographies of Ras chung pa were compared by Peter Alan Roberts in his PhD dissertation, which he later published as a book.[1044] In it, he showed the considerable evolution of the narrative of Ras chung pa's life over centuries, so much that many uncertainties remain. Ras chung pa was born in 1084, became an orphan and was adopted by Mi la ras pa, who brought him up and taught him, making him one of his closest disciples. Ras chung pa went to Mithila in India to obtain teachings from Nāropa's lineage unavailable in Tibet, which he especially received from the Tipupa. In Mar pa's biography by gTsang smyon He ru ka,[1045] this Indian master is described as the incarnation that Darma mDo sde, Mar pa's son, took after he entered the body of a pigeon. That identification, however, is not to be found is earlier accounts, be it within Ras chung pa's or Mar pa's biographical tradition, and may be gTsang smyon's elaboration. In the end of his life, after he left Mi la ras pa's

---

[1041] ST1, 12. 5; ST2, 35.1.

[1042] *Deb sngon*, 492; BA, 407.

[1043] ST1, 13.7; ST2, 38.8.

[1044] Roberts 2001 and 2007.

[1045] Tsangnyön 1982, 175-177.

presence, Ras chung pa settled in Lo ro, situated in present-day Tsona county in Southern Tibet, bordering both Bhutan and Arunachal Pradesh.[1046] He died there, probably in 1161.

rNgog mDo sde was almost his exact contemporary and he is said to have met him in Ras chung pa's place, probably Lo ro, or the nearby Byar po. No mention of mDo sde is made in Ras chung pa's biographical tradition, and indeed the relationship between these two important masters of the early bKa' brgyud lineages seems to have been short-lived. The *Rosaries* state that when mDo sde met Ras chung pa, the latter only spoke about Ti phu pa and ignored Mi la ras pa, which made mDo sde uneasy. It is likely that the reason for mDo sde's displeasure was double. First, as Mi la ras pa had been his father's student and later turned out to be a successful master in his own right, it is likely that his fame added to the rNgog pa's reputation. Second, emphasizing Ti phu pa over Mi la ras pa would contribute to belittle Mar pa's heritage, as Ras chung pa was said to have gone to India in order to receive some teachings that were missing in Mi la ras pa's, hence Mar pa's, transmission. Hence, Ras chung pa's disregard for Mi la ras pa was frowned upon by mDo sde, and he decided not to request Ras chung pa's teaching.

There might have been reasons for him visiting Ras chung pa, however. As explained in two closely-related biographies of Ras chung pa,[1047] Mi la ras pa's disciple had been invited to gZhung gi ri bo by sPa lBa ba can, where he gave instructions to both male and female practitioners. This happened when Ras chung pa was traveling to Central Tibet after he left Mi la ras pa, i.e. probably in the 1110s. mDo sde may not have been present at the time, as it was sBa lba can (rNgog Chos rdor brother-in-law and mDo sde's uncle) who was in charge of Ri bo. As explained earlier, Ras chung ma may also have taught to Jo mo sgre mo, one of mDo sde's spiritual tutor, and given her relics of Mar pa and Mi la ras pa's hair and nails.

These meetings show that one or two generations after Mar pa the various branches of his disciples, while having common representations of their ancestry, were increasingly organizing themselves to develop more clearly-identified lineages and that this involved some tensions. In the biographies, many passages such as this hint at tensions between the various descendants of Mar pa. In one of the earliest biographies of Ras chung pa for instance, there is an episode where he receives teaching from mTshur ston dbang nge but is unimpressed and engages in a breath-control contest with him.[1048]

[1046] Roberts 2007, 204.

[1047] *Bka' brgyud kyi rnam thar thog mar rdo rje 'chang gi rnam thar na rim par bzhugs so*, NGMPP. Reel no. L 481/4 (W21237), 128b; *Rwa lung dkar brgyud gser phreng*. Palampur: Sungrab Nyamso Gyunphel Parkhang, 1975 (W19222), 1: 217.

[1048] Roberts 2007, 214. The biography of Ras chung pa refered to as "Gyadangpa's" (without quoting the page) was actually not composed by rGyal thang pa bDe chen rdo rje, but added to his rosary from another collection describing the lives of the early Ras chung sNyan brgyud school (*Bde mchog snyan brgyud kyi rnam thar skor*. Darjeeling: Kargyud Sungrab Nyamso Khang, 1983, 1: 191-243. See Sernesi 2010b, 414; Ducher 2017, 70-72 for details).

3.2.3. Relics

Then one day,[1049] *(when he reached his 25th year)*, Lama [mDo sde] went to gTsang and stayed in Chu mig. Jo mo sgre mo said: "All of you, young nuns, pour water in the beer! My mkhan po is weary in a faraway *guest-house* of Chu mig!" [13] She met him the next morning and, having offered to him a small reliquary, she said: "In this are Lord Mar pa's bones and Mi la ras pa's hair and nails. **There are also hair, nails, bones and relics of the learned and accomplished Tibetan masters of old.** Do not bring it anywhere, and leave space [in it]!" It is said that there was two seventy-year-old venerable attendants present.

[…] *Someone going to Khams who had not listened to what was to be done with the reliquary brought it to Khams*.[1050] Later, when the lama returned to gTsang, he stayed at Chu mig. Jo mo sgre mo said: "All of you, young nuns, pour water in the beer! My mkhan po is weary in a faraway guest-house of Chu mig!" *As soon as* she met him in the morning, she did not say anything else than: "Do you have the reliquary I gave you?" The lama replied "I do," *so Jo mo retorted*: "Do you have it or is it in Khams?" Having brought another **silver** reliquary of one cubit, she offered it and said: "In this are Mar pa's bones, Mi la ras pa's hair and nails, and bones from your previous incarnation. Don't send it anywhere!" He carried it [back] to Central Tibet and **now** it is set in a great relic house.

[…] When[1051] Lama [mDo sde] was staying at 'Khar rgyab in Dol *(to transmit the empowerment of the fifteen goddesses [of Nairātmyā])*, one of the Venerable Mar pa's granddaughter came. The **Lama** offered a roll of silk to her, and said: "I will make a religious council **in gZhung** next year, please come on that occasion!" **The granddaughter replied that she would do like this.**

The next year: The Venerable [Mar pa] himself had placed in the top of a small **sandalwood** portable altar brought from his first journey to India the hair of lord Nāropa, his nails, and his meditation statue, and he had sealed its foot *by melting it*. When [Mar pa] died, his bones were enshrined in the bottom of that altar. His son Bya rid 'khor lo, stating that his father loved his mansion, had pierced the foot of the altar and transferred the bones in a small cotton sack. He placed them on a window of the mansion in order to protect it against the damage by men, rain, *and other things*. It is said that he sold the altar to someone who was asking it. Then, **the granddaughter** went to take the bones of the Venerable. *(She was greeted by lines of monks playing music)* in Nya mo

---

[1049] ST1, 12.8-13: 2 and 13.3-13: 6; ST2, 37.8-38.3 and 38.4-38.8.

[1050] Alternative vesion in ST2, 38.4-5: "Someone going to Khams, having made offerings and requests, brought the above-mentioned reliquary to Khams."

[1051] ST1, 14.1-5; ST2, 39.3-40.1.

gyur **(in Lower gZhung)**. She offered them to Lama [mDo sde], *who was pleased*. **The Lama said** "I am **called rNgog mDo sde** and I am a tantrist who holds his *samaya*s!" Then, they made the great religious council. It is said that three-hundred-and-sixty-two spiritual friends protected by a parasol assembled, led by the great mChims brTson 'grus seng ge (**or the abbot Nam mkha' grags from rNar thang)** *(who was invited as the main priest for the funeral service at the end of the council)* and Phywa pa *Cho skyi seng ge*, the **great seat-holder of** gSang phu. They made prostrations and circumambulations in front of the **Venerable**'s granddaughter, and that she was showered with gifts: the Lama gave her a piece of an ancient turquoise, a roll of brocade, a pair of bamboo horsewhips and a set of nine things.
[…] The[1052] great Lama died when his three grand-sons, Master rGyal tsha Ra mo, Master rDor seng and Master Kun dga' were respectively in their twenty-first, fifteenth and tenth year. *Then, the three nephews built a great reliquary for the Venerable Mar pa and for lama mDo sde*.

The meaning of relics

For a long time in the West, be it in Buddhist studies or religious studies in general, relics and their veneration was considered superstition and not given much credit.[1053] This changed, and much like biographies and hagiographies, the various relics became as legitimate a subject of study as any other. In the *Encyclopedia of Religion*, John Strong defines them as:[1054]

> […] the venerated remains of venerable persons. This should be taken to include not only the bodies, bones or ashes of saints, heroes, martyrs, founders of religious traditions, and other holy men and women but also objects that they once owned and, by extension, things that were once in physical contact with them.

The veneration of relics is featured highly in Buddhism and Catholicism, while it is virtually absent in other religions (Protestantism, Hinduism, Judaism), and found only incidentally elsewhere (Islam, Ancient Greece). In Buddhism, it is said that the cult of relics started after the Brahman Droṇa divided the Buddha's cremated remains in eight equal shares and distributed them to eight kings, who built stūpas and paid homage to them. The Mauryan emperor Aśoka (3d c. BC) later collected these relics and redistributed them throughout his empire in 84.000 shares. As exposed by Rachel Guidoni in her thesis on relics in the Tibetan world,[1055] relics of the Buddha played a great role in all Buddhist countries, except in Tibet where they were superseded by the relics of Tibetan saints.

[1052] ST1, 22.5-6; ST2, 48.3-4.

[1053] Trainor 2004.

[1054] Strong 2005, 11: 7686.

[1055] Guidoni 2006. The first part describes the place of relics in the religious history of the West and Asia, and especially in Buddhism (chap. 3). In the second, Guidoni describes the process of dying and the various forms of

In Tibet, as in other countries, relics can either be part of a saint's body or derive from a contact with it (pieces of clothing, religious articles and so on). They can be obtained during his lifetime or after his death. In the latter case, depending on the becoming of the saint's corpse, there can either be his whole body, parts of his bodies (relics) or nothing at all (death in a rainbow body).[1056] From all of these (saints dead or alive, mummies, body parts, and even stūpas, statues and so on) pearls can appear, which have a tendency to proliferate. In the case of Mar pa, the relics left behind are called *gdung*. Regarding this term, Guidoni notes:[1057]

> Dans les sources tibétaines, le terme *gdung* a souvent un sens ambigu. En général, dans les récits de funérailles, il désigne des fragments d'os, voire, par extension, tous types de reliques. Plus rarement, il peut désigner la dépouille en entier. Il semblerait toutefois que les auteurs tibétains aient cherché à lever cette ambiguïté en spécifiant, dans la mesure du possible, à quoi ils faisaient référence : ainsi trouve-t-on mention de *gdung rus* pour désigner des os, *'phel gdung* pour désigner des perles, ou *dmar gdung* pour un corps momifié.

In Mar pa's case, the word *gdung* is generally used to describe the relics collected after his death, and on two occasions these are specified to be *gdung rus* (bones). The word *ring bsrel* (relics in general, or in more specific cases the pearls that appear from a contact with sanctity) is used twice in ST2 to refer to relics of other saints offered by Jo mo sgre mo to mDo sde and to pearls that appeared on rNgog Sangs rgyas yon tan's corpse.[1058] In the *rNam rab Guide*, it is said that Mar pa's mummy (*sku dmar gdung*) was the main support of sPre'u zhing, but that it was destroyed during the Cultural Revolution.[1059] This is doubtful however: the sPre'u zhing temple housed mummies of later rNgog masters, but not of Mar pa. In the oldest biographies of Mar pa, no detail is provided about his corpse or funeral; some only mention that his *gdung* were collected by mDo sde. The first text to provide some detail on the topic is the *Rwa lung dkar brgyud gser phreng*, compiled in the early 13th century:[1060]

> When [Mar pa] reached his 80th year, […] the great Lord Nāropa came and told him: "Lay out great offerings and offer a fine *gaṇacakra* cake!" Without hiding anything or the like, as his subtle energies and mind were fit, he made the ejection, and he left his body amidst particularly excellent signs. At that time, everybody could even hear the sound of the *ḍāmaru* and the like. There also appeared [auspicious] sounds, lights, rainbows, earth quakes and so on. Then, after the corpse's purification (*gdungs sbyangs*) and prayers, there appeared bones (*sku gdung*), pearls (*ring bsrel*), an *A*, his heart and tongue. Other special supports also emerged.

---

relics in the Tibetan world. The chap. 6 in particular describes "bones" (*gdung rus*) and "pearls" (*ring bsrel*). The third part explains the benefits and uses of relics.

[1056] Guidoni 2006, 212.

[1057] Guidoni 2006, 220.

[1058] ST2, 38 and 45.

[1059] *rNam rab Guide*, 173.

[1060] *Rwa lung gser phreng*, 1: 163: 1-4.

The *lHo rong chos 'byung* specifies that the "corpse purification" was a cremation and provides details on the whereabouts of the relics. It states:[1061]

> When his corpse was purified by fire, there appeared a clear image of *Cakrasaṃvara* on his skull, now kept in lHo brag, and an image of the Bhagavan Śākyamuni, now held by a community of practitioners in the eastern side of mDo smad. Most pearls and bones were enshrined within a *pu ri* [stūpa?] in gZhung, and the rest of the bones was used as a holy field of accumulation of merit by some. On the slab of the funeral pyre, there appeared the letter *A*, now kept in Gung thang.

The relics gathered by mDo sde

rNgog mDo sde received two sets of relics collected after Mar pa's cremation. First, while he travelled to gTsang, he reached a place called Chu mig, a town to the south-east of gZhi kha rtse,[1062] where he was greeted by Jo mo sGre mo. She had a great devotion for him as she considered him the reincarnation of her past master, and gave him a reliquary containing Mar pa's bones as well as Mi la ras pa's hair and nails. As argued above, it it possible that she had received Mi la ras pa's hair and nails, and possibly Mar pa's bones, from Ras chung pa. sGre mo gave the relics to mDo sde while requesting him to enshrine them in gZhung and nowhere else. For some reason, someone in mDo sde's entourage brought them to Khams. It is possible that these "stolen" relics are the ones mentioned by the *lHo rong chos 'byung* as the ones kept in the Eastern mDo smad. When mDo sde visited sGre mo again, she gave him another set of the same relics, together with bones of her deceased master. Although it is strange that mDo sde should let anyone carry away these precious relics, the main function of the episode is to underline the importance of relics as the spiritual foundation of sPre'u zhing's legitimacy. The fact that sGre mo advises mDo sde to keep space in the reliquary announces the future deposit of Mar pa's main relics in gZhung, which in turn indicates that mDo sde can be considered Mar pa's legitimate heir.

This is all the more obvious when the situation is compared with that of Mar pa's seat in his house, Sras mkhar. The *Rosaries* state that Mar pa's son Bya ri 'khor lo desecrated an altar Mar pa had brought back from India. Nāropa's hair and nails as well as some metal coming from Nāropa's statue were sealed in the upper part of the altar, and Mar pa's bones were inserted in the lower part of the altar after his death. Bya ri 'khor lo took Mar pa's bones out and sold the remaining part of the altar. He hung the bones in a cotton bag on the window of the house as a protection against thieves and damage by storms and the like. That description gives the impression that Mar pa's tradition may have been weakly followed in Sras mkhar at the time. This is backed by a story told in the inventory of a treasure found by Gu ru Chos dbang and known by the term *Sras mkhar ma*.[1063] This collection, an example among several

---

[1061] *lHo rong chos 'byung*, 49. It is likely that this description relies on both the *Rwa lung gser phreng* and mKha' spyod dbang po's biography of Mar pa (*Bde mchog snyan brgyud kyi rnam thar skor*, 130). See a similar description in Tsangnyön 1982, 203.

[1062] See Sørensen and Hazod 2007, 1: 187.

[1063] *Rin chen gter mdzod*, 85: 52-57. See Ducher 2016a for details.

early bKa' brgyud hidden treasures, is made up of fifteen scrolls said to contain the quintessence of Nāropa's teaching to Mar pa. In the inventory, Chos dbang writes that he studied in Gro bo lung with Bla ma Se bro Gyang gsar pa, who was the third representative of the Se bro clan who inherited Mar pa's seat from Mar pa's son dGe 'dun. During one teaching, Se bro showed a mysterious scroll wrapped in silk, but hid it before Chos dbang could examine it. Upon Chos dbang's insistence, he explained that he got it from his grandfather Se bro Rin chen dbang phyug. Himself inherited it after Mar pa's son dGe 'dun was poisoned by his wife, perhaps over a strife concerning Mar pa's relics, squandered by dGe 'dun's brother Bya ri 'khor lo. Before dying, dGe 'dun burnt some texts, saving one scroll, stating that it was the index to key instructions from his father which did not require empowerment and that were to be revealed after five generations. Together with the scroll, he gave to his disciple Se bro the translator's texts, bone ornaments and relics. Se bro Rin chen dbang phyug later passed them on to his successor Se bro rJe btsun, who kept the secret. Three years after his death, the scroll was found by Se bro Gyang gsar pa, who did not believe in the eventuality of a bKa' brgyud treasure, and so disregarded the scroll. His mentioning it in front of Guru Chos dbang wetted the latter's interest, and when he felt the time had come for the revelation, he went to Gro bo lung and revealed the treasure.

The whole story shows that the Gro bo lung monastery and Mar pa's mansion Sras mkhar fell prey to great tensions soon after the Lo tsā ba's death, and his children did not live up to his example, to the point that another clan took over the seat after less than a generation. rNgog mDo sde, who had received Mar pa's teachings and could be considered one of its main propounders, managed to turn this dire situation to his advantage by gathering Mar pa's physical remains in gZhung, which could then become the geographical replacement of Gro bo lung. This opportunity was offered to him by Mar pa's granddaughter.[1064] The *Rosaries* describe that mDo sde first met her in the neighboring valley of Dol, at a place called 'Khar rgyab, while he was granting the *Nairātmyā* empowerment. mDo sde honored her with some offerings and invited her to visit again on the next year, as the guest of honor of a religious council he was planning to hold at Nya mo gyur, in the lower part of the gZhung valley. At that time, she was welcome with great pomp, bringing with her Mar pa's bones that she had retrieved from Sras mkhar. She donated them to mDo sde and, in accord with all the great scholars present at the occasion, was placed at the head of the monk's rows, an indication of the prestige Mar pa enjoyed at the time. While half a century earlier he was just one of many translators, by then, present in his bones and represented by a woman, he presided over rows of scholars, among which may have figured Phywa pa Cho skyi seng ge from the gSang phu Seminary, Bla ma zhang from the bKa' brgyud school, bSod nams rtse mo from the Sa skya school, and others.

[1064] She could be a niece or a granddaughter, as the terms *tsha mo* (used in ST1) and *dbon mo* (honorific, used in ST2, *lHo rong chos 'byung* (p. 54) and *Deb sngon* (p. 491)) can mean both. In the *mKhas pa'i dga' ston*, 1: 778, and the *Deb dmar*, 76, she is called *sras mo*, "daughter," but this probably took place at the end of mDo sde's life, so it is unlikely that any of Mar pa's daughter was still alive. In the *lHo rong chos 'byung*, 48, it is stated in a note that she appeared to be the daughter of either dGe 'dun or Bya ri 'khor lo, hence Mar pa's granddaughter. Furthermore, in ST1, 22, the word *dbon po* is used to refer to Ra mo as being the grandson of mDo sde, so the word *dbon mo* should be understood as granddaughter.

According to the *Deb ther sngon po*,[1065] the events unfolded slightly differently. mDo sde first met Mar pa's granddaughter during the council at Nya mo gyur, while she was going on pilgrimage to lHa sa. She offered to him a small quantity of Mar pa's bones and was made the guest of honor of the council for a day. Later, she carried on her journey to lHa sa, accompanied by mDo sde's envoys. There, she gathered all of Mar pa's remains and donated them to mDo sde.

We do not know much about the Nya mo gyur council from sources other than rNgog mDo sde's biographies, which presen them as a grand event attended by the great luminaries of the time. The identity of the first master mentioned is slightly unclear. All sources call him 'Chims chen po. ST1 specifies this was 'Phyims chen brTson 'grus seng ge.[1066] According to the 5th Dalai Lama's record of teachings received, mChims brTson 'grus seng ge was a student of Ba ri Lo tsā ba and a master of rGya zhang phug pa.[1067] He also held a familial lineage that reached the 7th sNar thang abbot, 'Chims Nam mkha' grags pa (1210-1285) four generations later.[1068] ST2 and ST3 depart from ST1 and state that it was "'Chims Nam mkha' grags pa, the abbot from Nar thang" who attended the council. This is impossible as he lived much later than mDo sde. The *Deb ther sngon po*, *Deb ther dmar po*, and *lHo rong chos 'byung* only mention mChims chen mo. It is possible that ST2 erroneously specified Nam mkha' grags's name as he was the most famous, but that brTson 'grus seng ge was the one meant, as 'Chims chen mo may very well be his nickname too.

The second master mentioned is Phywa pa Chos kyi seng ge (1109-1169). He was the abbot of gSang phu ne'u thog and eminent Madhyamaka and Pramāṇa propounder. Apart from them, none of the 362 honorable *dge bshes* attending the council are named by ST1 or ST2. The *Deb ther dmar po* adds g.Yor ston, Shar pa rDor seng, 'Khon bSod nams rtse mo and Zhang Rinpoche to the list.[1069] The *Deb ther sngon po* also mentions Bla ma Zhang, but ignores Phywa pa.[1070] In the *mKhas pa'i dga' ston*, it is Phywa pa, g.Yor ston and Zhang Rinpoche that are mentioned among the 400 *dge bshes* assembled in Nya mo gyur for the council.[1071]

The date of the council is not clarified in the *Rosaries*, but it is likely that it happened in the end of mDo sde's life (1154 according to the *lHo rong chos 'byung*). Phywa pa was gSang phu's abbot from 1151 to 1169, so if he attended the council in this title, it may have been between 1151 and 1154. mDo sde died in Nya mo gyur, and his remains were enshrined by his three grandsons together with those of Mar pa in a silver reliquary, which was deposited in

---

[1065] *Deb sngon*, 491-492 (BA, 406-407).

[1066] ST1, 14.4.

[1067] Bu ston *gSan yig*, 22 and DL5 *thob yig*, 1: 67a.

[1068] Nam mkha' grags, alias 'Chims chen po, was the author of a famous biography of Atiśa. See Roesler 2008, 397.

[1069] *Deb dmar*, 76.

[1070] *Deb sngon*, 491.

[1071] *mKhas pa'i dga' ston*, 778.

a large stūpa.[1072] There is no precision of its initial location: it may either have been kept at Nya mo gyur, in the lower gZhung valley, or Ri bo khyung lding, the familial estate located above the actual sPre'u zhing temple. As Ra mo (1134-1170) was Ri bo's seat-holder for 16 years (1154-1170), it is likely that he built the reliquary there, where it was consecrated by Bla ma zhang (1122-1193).[1073] After Ra mo's death, his two sons inherited the seat, and Kun dga' rdo rje (1145-1222), Ra mo's cousin, inherited the reliquary. He built the sPre'u zhing temple and monastery around it, and it remained for centuries an important centre of pilgrimage. According to the account by Kaḥ thog Si tu Chos kyi rgya mtsho (1880-1923), in the 20th century it was kept in a separate temple, known by the name "Red Stūpa of Innumerable Relics" (*gdung 'bum dmar po*).

3.2.4. Offspring

3.2.4.1. The two branches of the clan

> Lama[1074] mDo sde had six children: Master Jo tshul (the only gTsang tsha with his partner Tshul skyid); Master Jo thog (rGyal tsha)(with his wife Jo skyabs, who had four sons); Jo 'od (his daughter is Ha lo); Jo bsod; sTon chung dbang mo (the child of Jo non); and Jo bde 'od. Jo tshul's son (the higher lineage, the gTsang tsha line) is master Kun dga' rdo rje; (his daughter is 'Kho dge).
> […] ([Jo tshul gave rise][1075] to the higher [rNgog line], called the gTsang tsha line. Master Jo thog and his wife 'Phrang po lHa cig 'bum rgyan gave birth to two rGyal tsha sons, [one being] Ra mo, who formed the lower rGyal tsha line.)

mDo sde was Chos rdor's only son, but he himself fathered many children. Unfortunately, all of them died while he was still alive, and it was therefore mainly to his grandchildren that he handed over Mar pa's spiritual heritage. mDo sde's first-born, Jo tshul (short for Tshul khrims shes rab), hailed from an union with a woman mDo sde met in gTsang, called Tshul skyid. He was born in 1103. Five years later, in 1108, was born Jo thog (short for Thogs med grag), the first-born of mDo sde's legitimate wife, Jo mo skyabs. She had three other sons, Jo 'od, Jo bsod and Jo bde. mDo sde also had a daughter, called sTon chung dbang mo. According to a note in ST1 under her name,[1076] she was the daughter of another woman, called Jo non. No other source mentions this Jo non. From mDo sde's first two sons, Jo tshul and Jo thog, branched the two lines of the family, called gTsang tsha and rGyal tsha. The gTsang tsha branch masters became Mar pa's primary heirs despite Jo tshul being an illegimate son and having been away from gZhung for most of his life. Although it may be possible that this is due to the fact that he was the elder son, it is much more likely that it was because his own

---

[1072] See also *Deb sngon*, 492; *Deb dmar*, 77: Although 'Gos Lo tsā ba does not mention mDo sde's relics, the *Deb dma*r states that it was mDo sde's grandson Ra mo (1134-1170) who constructed the reliquary for "Mar pa father and son."

[1073] *Deb dmar*, 77.

[1074] ST1, 6: 4-5; ST2, 31: 1; ST3, 80.

[1075] These are notes in ST1, 13: 4 and ST2, 38: 5.

[1076] ST1, 6.7: *jo non gyi sras.*

son Kun dga' rdo rje founded sPre'u zhing. Jo thog of the rGyal tsha branch was a prolific writer but did not preside over the seat as he died before his father. His son Ra mo headed Ri bo khyung lding for seventeen years and was instrumental in the transmission of the rNgog heritage to the following generations.

3.2.4.2. Jo Tshul and the gTsang tsha branch

> One evening,[1077] the Lama thought he should go to his *mūdra*'s place. When he reached the crossroads, he met Jo mo sgre mo, who told him: "Don't go tonight! Go tomorrow and a son will be born!" Then, he went on the next day, and a son was produced: it was Master Jo tshul. When he reached his fourth year, he was brought [to his father's place], fastened in a large meditation belt. He stayed only four months and left, being told to come back later.
> […]
> Master[1078] Jo tshul taught the *Two Segments* in his fifteenth year. In his seventeenth year, he was ordained in front of sGam po pa. After he received all explanations *(from [Sgam-po-pa] and his own father)*, he is said to have received the three–Abhidharma, Zhi byed and Tāra–from dMar (rGyal ba lo).

When he was twenty-four, mDo sde went to gTsang. In Chu mig, he was welcome by Jo mo sgre mo, who recognized him as the reincarnation of her master and gave him precious relics. She also counseled him with regards to his tantric partners. As described in the *Rosaries* and later sources, one evening, when mDo sde was on the way to visit his partner (she is called a "woman" (*bud med*) with the name Tshul skyid by ST1, but a *mūdra* with no name by all other sources), sGre mo appeared from the middle of nowhere. She told him to postpone his visit to the next day, and that a son would then be born. Indeed, on the next year, a son was born to that woman. It was not before the son, Jo tshul, or Tshul khrims shes rab, was in his fourth year (presumably in 1106) that Tshul skyid brought him to the gZhung valley, where his father mDo sde was residing. For some reason, Jo tshul stayed only four months. Afterwards he was told to come back later and left.[1079]

This story is peculiar for several reasons. First, it is interesting to note that in this episode mDo sde produced a child with a woman that was not his wife. This is not an isolated case in the history of Tibetan Buddhism, as many children were born as the sons of great masters and women that were not their wife,[1080] and as the rules of wedding are not as fixed as Westerners

---

[1077] ST1, 13.2; ST2, 38.3; ST3, 77.

[1078] ST1, 14.6; ST2, 40.2; ST3, 81-82.

[1079] It is possible that he did not come back ("it is said that he did not come later," *phyi*| *ma byung* gsung). ST1, 13.3: *zla ba bzhi tsam sdad nas song phyi ma byung gsung*/, or that "he was told to come later," (*dus*| *phyis ma*| *byung gsung*), ST2, 38.3-4: *zla ba 4 rtsam gdad nas song/ dus phyis ma byung gsung ngo*/ As he learned the rNgog traditions and as his son was brought up in gZhung, it is likely that he did come back.

[1080] One finds in the *Blue Annals*, 420-422, the example of gSer sdings pa gZhon nu 'od (12th century). He founded the gSer sdings Monastery, and later had a child with a nun. He expelled her, and recognized his paternity only a few years later, when the child appeared to be quite exceptional.

can imagine.[1081] Barbara Aziz for instances states–in the case of her ethnological study of modern Tibetans of the Ding ri valley–that it is not at all unusual for men (and women) to have sexual affairs while already married, the important thing being secrecy and the safekeeping of honor.[1082] In our particular case, what is surprising is not that mDo sde had a child with a woman he did not have an enduring relationship with, but the fact that all biographies openly mention it and that it is legitimized by sGre mo's prophecy of Jo tshul's birth. The only reason explaining this is of course the fact that Jo tshul himself fathered a child, Kun dga' rdo rje, who partook in his uncle Ra mo's heritage, and built the sPre'u zhing temple on a new land in order the shelter Mar pa's relics. The fact that it was the sPre'u zhing masters (the "higher" (*gong ma*) seat) and not the ones from Ri bo gZhung lding (the "lower" (*'og ma*) seat, although the historical one) that continued the lineage is certainly no stranger to this. It is actually likely that sGre mo's prophecy is a posthumous backing of the sPre'u zhing inmates, who may have felt insecure about the obvious illegitimacy of their ancestor. This anyway reinforces, if needed be, the role of Mar pa's relics as a key factor for establishing sPre'u zhing as the rightful seat of the Mar rngog bka' brgyud lineage.

The second reason for this story not being completely straightforward is that Jo tshul, even though he was mDo sde's first son (and the only one at the time), was not raised by mDo sde and did not stay more than four months in the gZhung valley. The reason is not explicit. Did Jo tshul's mother perhaps come at the wrong time, when mDo sde had just married Jo mo skyabs (their first son, Jo thog, was born in 1108, hence produced in 1107, i.e. a few months after Jo tshul left)? Or could Tshul skyid or her entourage be responsible for the disappearing of the relics gifted by Jo mo sgre mo? As far as the latter hypothesis is concerned, it comes as a possibility as the sentence about Jo tshul leaving and the one about the relics being brought to Khams closely follow each other. The sources do not clarify what happened after Jo tshul and his mother left. What is stated is that the relics were taken away, and that mDo sde went again to gTsang, were sGre mo enquired about the relics and gave him new ones, this time enjoining him to keep good care of them. Did mDo sde go to gTsang to see his partner and son? Did he go there to visit his mentor sGre mo? It is not said, but gTsang remained closely associated with the rNgog pa lineage, eventually known as gTsang tsha.

As for Jo tshul, the *Rosaries* state that he taught the *Two Segments* at fifteen, but it is not clear that he received that transmission from mDo sde, although it is likely. At seventeen, he took ordination with sGam po pa (1079-1153), and is said to "request all instructions to completion" (*khrid thams cad tshar bar zhus*). ST1 adds as a note that thisi refers to "his father and a second one," perhaps sGam po pa, but that note is not repeated in any other version.

Jo tshul's second main master is called dMar in the *Rosaries*, with a note specifying that this refers to rGyal ba lo, this being the only name provided in the *lHo rong chos 'byung* (p. 55). I can find no trace of a rMar dGyal ba lo, but rGyal ba lo was one of Ras chung pa's (1084-

---

[1081] Aziz 1978.

[1082] This also appears in the case mentioned above, in Sihlé 2001, 77-78, where an illegitimate son who was living in another village was adopted in order to inherit a house without heir.

1161) three main disciples, who stayed with Ras chung pa for twenty-five years before dying in his seventieth year.[1083] He was thus Jo tshul's contemporary, but as he was not known for the transmission of either the Abhidharma, Zhi byed or Tāra, the two may not be identical.

Jo tshul died at 44 in 1146, only seven months after his son Kun dga' rdo rje was born, and he was therefore not able to oversee his education. He also had a daughter, but nothing is known about her. Unlike his father, Kun dga' rdo rje was raised in the gZhung valley by his grandfather and uncles. He knew the *Nāmasaṃgīti* by heart in his sixth year. It is therefore likely that Jo tshul was close to his father in the latter part of his life, although he did not receive his education from him.

3.2.4.3. Untimely death of his children

> [mDo sde][1084] had six children, who died before the lama, in a succession from the youngest: Jo bDe was of a hare year and died in his eleventh. sTon chung dbang mo was of an ox year and reached her thirteenth; Jo bSod was of a bird year and reached his seventeenth: both died when their ship sinked in a swollen river [when going to] lTe ba gung, in 'Phrang po, in order to write in gold [a *Prajñāpāramitā*] *in 100.000* [*Verses*]. Master Jo 'Od was of a tiger year and lived to his twenty-fifth. Master Jo Thog was of a rat year and lived to his thirty-seventh. Master Jo Tshul was of a sheep year and lived to his forty-fourth. Although sTon chung dbang mo did not live beyond thirteen, she knew most of the Dharma, and so it caused much grief to the lama. As everyone was asking Jo mo sgren mo where people were reborn, the lama too sent someone to gTsang to ask her where [his daughter] would take birth. She replied that she would be reborn as his grandson in the following year. The following year, while the lama was staying in Nya mo kyur, it is said that he felt a great surge of joy when he heard that Jo ra was born. It is said that master Jo ra himself became famous for knowing the dharma without having to learn it.
> The great Lama died when his three grand-sons, Master rGyal tsha Ra mo, Master rDor seng and Master Kun dga' were respectively in their twenty-first, fifteenth and tenth year. Then, the three nephews built a great reliquary for the Venerable Mar pa and for lama mDo sde.

The tragedy of mDo sde's life was the loss of all of his children in a few years. The youngest, Jo bde, was born in 1123, and died in 1133. In the same year, mDo sde's only daughter, born in 1121, and his fourth son Jo bsod, born in 1117, drowned while crossing the gTsang po. They were on their way to 'Phrang po, a region on the northern bank of the gTsang po,

---

[1083] See his life story in e.g. 'Phrin las rgya mtsho: *Bla ma brgyud pa'i rnam thar ngo mtshar zla ba'i me long*. Plouray: Drukpa Plouray, 2009, 100-101.
[1084] ST1, 22.1-6; ST2, 47: 7-48-4.

opposite the gZhung valley.[1085] On the following year, it was Jo ’od, born in 1110, who died. Thus, in just one year, in his mid-fifties, mDo sde lost four of his children. Ten years later, in 1144, his most talented son and presumably his heir, Jo Thog, died at 36 in his “obstacle year” (*lo kag*), followed two years later by Jo tshul. Thus, in 1146, at 68, mDo sde’s was left with no heir, and with only three grandsons aged twelve, six and one.

Among mDo sde’s six children, two are singled out as being particularly promising: Jo thog (see below for details), and his only daughter, sTon chung dbang mo. Her death grieved him so that he asked sGre mo for a prophecy of her rebirth. sGre mo identified mDo sde’s first grandson, Ra mo (born in 1134), as her rebirth, and Ra mo was accordingly credited with an exceptional precocity.

With sTon chung dbang mo’s death was lost the one opportunity in the rNgog history for a woman to make a name for herself. It must indeed be remarked that the only women mentioned in the text are mothers of each son, but with no details whatsoever. Two of mDo sde’s granddaughters are listed in ST3 (’Kho ge, the daughter of Jo tsul, and Ha lo, the daughter of Jo ’od), but they did not leave any other imprint on the rNgog history. Although there were doubtless many other girls in later generations, none is mentioned. If that is at all a trend in Tibetan history, it can therefore be remarked that although it was not impossible for a woman to reach some prominence through the Dharma, it was in no way a widespread occurrence, even in an hereditary lineage.

3.2.5. Death

> [mDo sde][1086] passed away (in Nya mo kyur) when he reached his 77th year, on the 11th day of the pig month of a dog year.

mDo sde died quite old, at 76. It happened on the 11th day of the 10th month (October 23?)[1087] of 1154 (wood dog year according to the *lHo rong chos ’byung*). He died in Nya mo kyur, which is also the place where he held the council and learned about Ra mo’s birth. It is therefore likely that the familial house remained at Ri bo khyung lding while mDo sde shifted his spiritual seat some time during his life in the lower part of the gZhung valley, maybe because it was easier to reach for visitors. Nothing is known about that place or its ruins. After he died, his remains, either mummified or cremated, were gathered by his grandsons.

mDo sde’s life, although not devoid of difficulty, was marked by the establishment of the Mar pa’s teaching in the gZhung valley. He lived as a fertile period, when lineages, monasteries, and traditions were blossoming everywhere, and he managed to be among those who owned enough capital to have an influence on their field. Although mDo sde lost his father quite

---

[1085] Sørensen and Hazod 2007, 1: 180, n. 428 (map p. 301). lTe ba gung may be a temple in that valley. The term *lte ba khung* is a translation of the Sanskrit *nābhimaṇḍalam*, referring to the “hole in the navel” (see the *Mahavyutpatti*)

[1086] ST1, 14.5-6; ST2, 40.1-2.

[1087] According to the Phug pa Calendar online, there is no 11th day in that month. The 10th day is on October 25, 1154.

young, he inherited from him a set of transmissions that was among the most fashionable of the time (highest yoga tantras and yoga tantras), coming from one of India's most famous paṇḍita, Nāropa, and blessed with many key-instructions that distinguished them from more scholarly approaches. He establish links with the powerful masters of the time, be it the translators who continued to import to Tibet the most intricate of Indian teachings, logicians such as Phywa pa who transformed Tibet's structure of education,[1088] and possibly tantric strategists such as Bla ma Zhang, who became the ruler of the lHa sa zone.[1089] mDo sde was a charismatic and uncompromising tantric master, who did not hesitate to turn down relationships he did not see as fitting, no matter how natural they may have been. He thus left Ram's estate without receiving his teaching although his father had advised him to do so, and turned down Ras chung pa's company, disapproving what he saw as a lack of respect of his father's student Mi la ras pa. His life was crowned by the welcoming of Mar pa's relics, thanks to whose presence the rNgog seat would continue for centuries to be associated with Mar pa. He was also a prolific writer and exegete, and his numerous disciples that ensured the spread of his transmission.

3.2.6. Disciples

> The[1090] great disciples of lama mDo sde are the following: rTsags Dar ma rgyal po, sNgo tsha Chos sku, 'Gar ston bKra shis dbang phyug, 'Tshur dung bu kha pa, rMa bya ba chen po, Bla ma Lho nag pa, Ngos rje Kun dga' 'od, Bya nag chen po, sNa ri khyung po, Go ne sNying po grags, dKar ston Chos 'od, Mal nag pa do pa chos tshul, Nal 'buṁ seng, Ra rdDo rje grags pa, Mal yer pa ba, Bla ma Be ro ba, rBa snyi ba'i jo sras. It is said that he had these, and others: three-hundred-and-sixty-one disciples who were spiritual friends in the mantra[yāna], holders of the parasol, blowers of the conch and actors of the benefit of beings.

(following page) **Chart 4: mDo sde's Disciples according to various sources**

[1088] Everding 2009.

[1089] Sørensen and Hazod 2007.

[1090] ST1, 23: 6-8; ST2, 49: 3-5; ST3, 80.

mDo sde's disciples[1091]	ST1	ST2	ST3	*lHo rong chos 'byung*	BA	Deb dmar
rTsags Dar ma rgyal po	x	x	brTsegs Dar ma rgyal po	rTsag Dar ma rgyal po	rTsags Dharma rā dza	rTsegs Dharma ra tsa
sNgo tsha Chos sku	x	x	rNgo tsha chos sku	x	x	x
mGar ston bKra shis dbang phyug	x	x	x	x	'Gar bKra shis rin chen	mGar bkra shis rin chen
'Tshur dung bu kha pa	x	x	Tshur Dum bu kha pa	mTshur Dum bu kha pa		
rMa bya ba chen po	x	x	x	x		
Bla ma Lho nag pa	x	x	x	x	lHo nag	lHo nag
Ngos rje Kun dga' 'od	x	Ngo rje Kun dga' 'od	Ngo rje Kun dga' 'od	Ngo rje Kun dga' 'od	Ngor rje kun dga' 'od	Ngo rje Kun dga' 'od
Bya nag chen po	x	Ja nag chen po	Bya nag chen po	x		
sNa ri khyung po	x	x	x	x		
Go ne sNying po grags	x		x	Go ne snying po		
dKar ston Chos 'od	x	x	x	x		
Mal nag pa	x	x	x	Mal nag pa		
Do pa Chos tshul	x	x	x	Dol pa chos tshul		
Nal 'buṁ seng	x	x	x			
Ra rdo rje grags pa	x	Ram rdo rje grags	Ram rdo rje grags	Ram rdo rje grags		
Mal Yer pa ba	x	x	x	x	x	x
Bla ma Be ro ba	x	Bla ma Bhe ro pa	Bla ma Bhe ro pa	Bla ma Lho ro pa		
rBa snyi ba'i jo sras	x	x	sBa snyi ba'i jo sras	bHa nyi ma'i jo sras		
gShen rje rDo rje seng ge				x	x	Sher pa rDor seng
gTsang pa lHa steng				x		
gTsang sMra seng				x		
rGya Nam mkha' dbang phyug				x		
Tre bo mgon po					x	x
mNyam med Shākya ye shes					x	x
Cog ro Chos rgyal					x	
lHa phyug mkhar ba					x	x
Dran ston mtha' bral					x	x
rGyal tsha Rin chen rngon					x	
'Tshe'u dar re					x	x

[1091] In bold are disciples presented below and in italic those whose relationship with mDo sde is doubtful. To the best of my knowledge, there is no detail about the others, who do not appear in any lineage.

According to all sources, rNgog mDo sde had many disciples—the *Rosaries* give the number three-hundred-and-sixty-one—thanks to whom his teaching spread large and wide. The main two were rTsags Dar ma rgyal po and ’Gar ston bKra shis dbang phyug, who were also commentators of the rNgog tradition. In the following part, I gather information on some of mDo sde’s disciples—the most important ones, at his time or later, or those who composed commentaries. For this presentation, I rely on the *Rosaries* as well as, for a large part, on records of teachings received by masters who were not part of the main rNgog lineages. In general, from the rNgog’ own perspective, the lineage and the family made one, and outsiders are mentioned in rare cases. In non-rNgog lineages, however, there are more divergences and consequently more information on disciples outside of the family. The main records of teachings received used are the ones by Bu ston Rin chen grub (1290-1364), Ngor chen Kun dga’ bzang po (1382-1452), Gong dkar ba Kun dga’ rnam rgyal (1432-1496) and the Fifth Dalai-Lama (1617-1682), the latter referring himself to the former two for rNgog pa traditions, as well as to the record left by Tshar chen Blo gsal rgya mtsho (1502-1566).[1092] A missing account is that of rNgog Byang chub dpal (1360-1446), often alluded to by Kun dga’ rnam rgyal. It is possible that this is none other than ST2, although the existence of an independent text may not be excluded. As indicated by the fact that my main sources are *gSan yig*, concrete details on the life of these masters are scarce and only provided when available.

3.2.6.1. rTsags Dar ma rgyal po

One of mDo sde’s two main disciples was rTsags Dar ma rgyal po, alias rTsags Dharmarāja. His family name—rTsags, brTsegs or rTsag—varies in the sources, but they all mention him. In texts from the rNgog tradition and in colophons of his works, his name is always spelled rTsags. In the conclusion of the part on the rNgog from the *Deb ther sngon po*, ’Gos Lo tsā ba states that “the preaching of the Doctrine by such great men as rTsags, a disciple of rNgog mDo sde, and others, spread widely,”[1093] thus particularly emphasizing Dharmarāja’s role in the spread of the rNgog pa traditions in Tibet.

In the *Rosaries*, he only figures in the lineage of *gSang ldan*, although he also appears in the *Catuṣpīṭha* lineage of several records of teachings received.[1094]

> Lineage of *gSang ldan*: mDo sde, rTsags Dar ma rgyal po, mTshur Dum bu kha pa, dGe bshes bZang mo ba, Rin chen bzang po, and him to both Seng ge sgra and his son [Rin chen rgyal mtshan].[1095]

rTsags authored a commentary and two rites associated to the *Hevajra* cycle that figure in the NKSB,[1096] and one on *gSang ldan*.[1097] Both the commentary on *Hevajra* and on *gSang ldan* are voluminous and played an important role in the tradition.

[1092] See I.1.3.8 for details and bibliographic references.

[1093] BA, 414.

[1094] *Gong dkar gsan yig*, 416-417; *Ngor chen thob yig*, 326; DL5 *thob yig*, 4: 632.

[1095] ST1, 8: 5; ST2, 33: 2. This lineage also figures in *Gong dkar gsan yig*, 414-415.

Not much is known about rTsags Darma rgyal po's life. He wrote his commentary on *Hevajra* in bZang yul mon pa sdong, which was one of the seven hermitages where Bla ma Zhang (1123-1193) practiced.[1098] According to Yamamoto,[1099] Bla ma Zhang was in retreat there around 1160, and fought a battle in that valley in 1173 or 1185, perhaps before rTsags resided there. In the colophon to the *gSang ldan* commentary, it is stated that although rTsags compiled the text, it was the Shākya monk Shes rab nam mkha' who completed it in the rGyal thang temple in the Lower Yar klungs.[1100] A commentary by mGar bKra shis dbang phyug was also copied there.[1101] This may be a temple related to the old Phag mo gru pa estate named rGya[l] thang in that location,[1102] and Shes rab nam mkha was perhaps the scribe who copied the manuscript. Given the place of this temple, this may have happened in the 15th century, when there was an interest in the rNgog tradition as well as ample funding (see section II.4 for details).

Among rTsags's disciples, two figure prominently in the lineages: mTshur Dum bu kha pa for *gSang ldan*, and rGya gsar ba Rin chen 'bum for *Catuṣpītha*. The former was also mDo sde's direct disciple.

rTsags Darma rgyal po probably held a family lineage as he transmitted Catuṣpītha to someone from the rTsags clan, called Guhyasiṃha according to Ngor chen.[1103] As Darma rgyal po is said to be a monk (*ban de*), this Guhyasiṃha may be his nephew. The fifth Dalai Lama calls him rTsags Mudrasidha and adds that the name is unclear in his sources.[1104] These two names may point to rTsags Yon tan seng ge (skt: Guṇasimḥa), who was one of the disciple of mDo sde's grandson, rGyal tsha Ra mo (see section II.3.3.2 for details).

3.2.6.2. 'Gar ston bKra shis dbang phyug

mDo sde's second foremost disciple was mGar bKra shis dbang phyug. Given his name, he probably hailed from the mGar family, which was very powerful during the Tibetan Empire

---

[1096] *dPal dgyes pa rdo rje'i rgyud kyi 'grel pa gsal ba'i sgron ma*, vol. 15 (NKCK, 6: 329-614); [*dPal dgyes pa rdo rje'i*] *mngon rtogs rgyas pa*, 16: 1-20 (NKCK: 6: 303-329); *Yan lag drug pa'i yig sna kye rdor gyi skor*, 16: 21-67 (NKCK, 6: 279-303).

[1097] *'Jam dpal gsang ldan gyi rgya cher bshad pa*, 16: 68-274 (NKCK, 7: 5-91)

[1098] NKSB, 16: 67*: rnam par bshad sbyar yi ge rtsags kyis bris/ [...] yan lag drug pa'i yi ge bla ma'i zhal gyi gdams pa la brten nas rgyas par sbyar ba zhes bya ba/ rdzogs so/ /bzang yul mon pa sdong du bris.* See Sørensen and Hazod 2007, 1: 87, n. 62.

[1099] Yamamoto 2012, 69 & 218.

[1100] NKSB, 16: 273: *bla ma rngog mdo sde'i thugs kyi sras po rtsags dge bshes kyis sbyar ba 'di la/ la la na ma rgyas pa dang/ gong 'og du bag tsam 'khrul pa kun 'dug pa kun legs par bkod de/ shākya'i sras po dge slong shes rab nam mkha' zhes bya bas/ yar klungs smad rgyal thang gtsug lag khang du sbyar ba'o/*

[1101] See NKSB, 18: 82 and below for details.

[1102] Czaja 2013, 462-466, appendix iv: no. 9. This was one of the twelve estates founded by rDo rje dpal. Thanks to Mathias Fermer for this reference.

[1103] *Ngor chen thob yig*, 326.

[1104] DL5 *gSan yig*, 4: 632.

and remained very influencial in Central Tibet afterwards.[1105] The name of the family is spelled ’Gar in the *Rosaries*, but mGar in most colophons, and it seems that the latter was more widespread. Although the *Deb ther dmar po* and *Deb ther sngon po* call him bKra shis rin chen, all other sources, including one of the colophons, give bKra shis dbang phyug, and it is likely that this should be the preferred name.

His name does not appear in any of the lineages of the rNgog tradition, but he authored several texts preserved in the NKSB and requested mDo sde to write an important commentary on the *gSang ldan* tradition.[1106] He himself authored a large commentary on *Hevajra*[1107] and another on *Mahāmāyā*.[1108] The manuscript of the latter was also written in the rGyal thang Temple of Yar klung mentioned earlier, where Shes rab nam mkha’ finished the compilation of the *gSang ldan* commentary by rTsags. It is possible that this Shes rab nam mkha’ was responsible for the copy of several texts from the rNgog tradition. The name of that place only appears in these two colophons.

3.2.6.3. gTsang gi bande sNgo tsha chos sku

The monk from gTsang called sNgo tsha Chos sku is one of mDo sde’s most important students and held his complete transmission.[1109] His name is often misspelled rNgog tsha, as in the KGND and in the records of teachings received by Gon dkar Kun dga’ rnal rgyal and the 5th Dalai Lama.[1110] The sNgo tsha clan came from ’Bri mtshams, a region in southern gTsang.[1111] sNgo tsha Chos sku was probably an important master in the region and held a family lineage that continued for several generations as more sNgo tsha masters appear in later times.[1112]

[1105] See Kerihuel 2011 on the history of the mGar clan during the Empire. See Yamamoto 2012, 183-186 for a summary of the mGar clan’s importance during the 12th and 13th centuries in Central Tibet.

[1106] *’Jam dpal gyi mtshan yang dag par brjod pa’i ’grel pa*, vol. 7.

[1107] *dPal dgyes pa rdo rje’i bshad ’bum nor bu sgron me*, vol. 17.

[1108] *Ma hā ma ya’i rgyud kyi ’grel pa*, 18: 1-82.

[1109] *lHo rong chos ’byung*, 66.

[1110] KGNDdkar chag, 32 (lineage of *Catuṣpītha*); *Gong dkar gsan yig*, 67 (lineage of *Mahāmāyā*): […] *rngog chos rdor/ zhe sdang rdo rje/ rngog chos sku/ rngog tsha dkon mchog dpal* […]. DL5 *Thob yig*, 4: 631 […] *rngog mdo sde/ rngog tsha chos sku/ rngog tsha dkon cog dpa*l […].

[1111] Vitali 2015, 550, n. 70, refers to sNgo tsha Chos sku in his study of a religious history of the Myang region of gTsang called the *Nyang stod bla ma’i mtshan gyi deb ther*.

[1112] For instance, a Catuṣpītha sādhana contained in the NKSB (*dPal gdan bzhi pa’i dkyil ’khor rgyas pa’i sgrub thabs de kho na nyid gsal ba*, 16: 275-331), was composed by a sNgags ’Chang Grags pa rin chen at the request of his guru, sNgo tsha rin po che Shes rab dpal bzang po, at Rin chen sgang in the Nyang stod region. The identity of these individuals is mysterious. ’Bri mtshams being located near the Nyang stod district, it perhaps refers to a master from the same sNgo tsha clan (see long colophon in NKSB, 16: 330-331). Someone called Grags rin pa appears in the *Catuṣpīṭha* lineage of Tāranātha (*gSung ’bum*, 20: 305; KGNDdKar chag, 32: 7) and may be our author.

Although he received all the rNgog teachings, sNgo tsha Chos sku only figures in some lineages of transmission of *Mahāmāyā* and *Catuṣpīṭha*. The proper orthography of his name is found in the *Mahāmāyā* lineage received by Chos rgyal ’Phags pa’s (1235-1280):[1113]

> […] Mar pa Chos kyi blo gros/ rNgog Chos kyi rdo rje/ rNgog jo sras mDo sde/ sNgo tsha Chos sku/ sNgo tsha dKon mchog/ Klog skya dBang phyug grags pa/ Bla ma lDong ston/ Bla ma Chos kyi rgyal po [’Phags pa]

He also figures in one of the lineage of the Catuṣpītha *maṇḍala* of Jñāneśvarī found in the KGND, which goes out of the rNgog clan after Ra mo and eventually returns with rNgog Byang chub dpal.[1114]

> […] rNgog Chos sku rdo rje/ rNgog Zhe sdang rdo rje/ rGyal tsha Ra mo/ rNgog [<sNgo] tsha Chos sku/ sNgo tsha dKon mchog dpal/ Dran ston mTha’ bral/ Dran ston Shes rab bzang po/ Grub chen Man lungs Gu ru/ Man lungs Kun mkhyen/ ’Dzam gling Sangs rgyan rdo rje/ Rig ’dzin Tshul khrims mgon po/ rNgog ston Byang chub dpal/ Lo chen bSod nams rgya mtsho […].

sNgo tsha Chos sku is considered the author of a long commentary on *Hevajra* preserved in the NKCK and NKSB.[1115] According to its colophon, the text was composed by sNgo tsha Chos sku on the basis of rNgog mDo sde’s instructions and was completed at rNgog Byang chub dpal’s time (during the 15th century), in sPre’u zhing, by a monk called Zhang rDo rje dbang phyug. It is noteworthy that this text is the only one in the NKCK to contain a xylographic image of rNgog mDo sde.

sNgo tsha Chos sku’s disciple (and nephew?) was named sNgo tsha dKon mchog dpal. He was also rNgog rGyal tsha rDor seng’s (1140-1204) disciple, along with Dran ston mTha’ bral.[1116] Thus, although the latter is considered mDo sde’s disciple by the *Deb ther dmar po* and *Deb ther sngon po*, it would rather seem, according to the *Rosaries*, that he lived later and received the rNgog pa teachings from sNgo tsha Chos sku and rNgog rGyal tsha rDor seng.

3.2.6.4. Mal nag pa

> […] Mal nag[1117] went to Khams, and everyone asked him: “Are you a student of the rNgog?” Thinking that he should request teachings from the rNgog, he came

---

[1113] “Lam ’bras lam skor gsum gyi gsan yig.” In *Sa skya bka’ ’bum*, 13: 144-145. This lineage is also found in Bu ston *gSan yig*, 56, with the spelling rNgo tsha.

[1114] KGNDdkar chag, 32. See also *Gong dkar gsan yig*, 414: […] *chos rdor/ mdo sde/ rgyal tsha ra mo/ sngo tsha chos sku/ sngo tsha dkon mchog dpal/ dran ston mtha’ bral/ dran ston shes rab/ man lungs gu ru/ man lungs kun mkhyen/ ’dzam gling pa sangs rin/ rig pa ’dzin pa tshul mgon/ rin po che byang chub dpal/ des bdag la’o*. Another lineage of Catuṣpītha transiting by sNgo tsha Chos sku figures in Bu ston *gSan yig*, 74.

[1115] *sNying po kye’i rdo rje rin po che’i rgyan dang ’dra ba’i bshad pa*, NKSB vol. 20; NKCK, 7: 91-289. Colophon, NKCK, 7: 287. The xylograph of mDo sde opening the present dissertation comes from this commentary (NKCK, 7: 92)

[1116] ST1, 23: 8. See section II.3.3.3.

[1117] ST1, 15.4; ST2, 41.1. Copied almost verbatim in *lHo rong chos ’byung*, 66-67.

> to dBus in front of the great lama [rNgog mDo sde]. He offered a *gaṇacakra* and requested instructions. He would offer one measure of gold for each of the various instructions, thus giving thirty-six measures of gold. Then, he offered more measures of gold and wanted to request instructions. He was told that there were no more instructions and so to receive scriptures. Then, he learned scriptures and received empowerments. It is said that no one had more rNgog instructions than him (he was a relative of Mal ka ba can). He was first a disciple of the Dwags po Physician [sGam po pa]; the Physician enjoined him to meditate in Zangs ri De'u Khyung tshang Nam mkha' lding. Having meditated there, it felt too little isolated. As there was higher up a very solitary hermitage called Bird-Nest Ermitage, he stayed there (and it is said that he reached the ninth *bhūmi*). Lama Kun dga' came there in his presence and stayed three summers and winters, completely requesting all the instructions of the rNgog.

Mal nag pa is said to be the one among mDo sde's disciples who received the most transmissions, requesting them with as much gold as necessary. He had a pivotal role in the rNgog lineage as he handed over to mDo sde's grandson, Kun dga' rdo rje (1145-1222), all that he received from mDo sde, thus ensuring an intact transmission despite the early disappearance of mDo sde's offspring. Although Kun dga' rdo rje received these transmissions from his grandfather and his cousin Ra mo, he was only nine when his grandfather died, and Ra mo was twenty. Mal nag pa for his part was a life-long retreatant and accomplished master, and was thus able to instil within the rNgog pa family a realized transmission of their own teachings.

As Mal nag pa was a yogi, not much else is known about him than what is said in the *Rosaries*, which is the source for later accounts such as the *lHo rong chos 'byung*. He was a relative of Mal Ka ba can, a famous 12th-century Zhi byed master,[1118] who came from a village called Mal rTe'u ra pa in the valley g.Yo'i bye can pa. As a youth, Mal nag pa went to Khams. There, rNgog mDo sde was very famous and he decided to travel to gZhung in order to study with him.

Mal nag pa was also a disciple of sGam po pa, who advised him to retire to a cave near Dwags lha sgam po (sGam po pa's monastery in the Dwags po region). The exact location of that hermitage is not clear. The *Rosaries* speak of Zangs ri De'u Khyung tshang Nam mkha' lding. Zangs ri is a region to the west of Dwags po, and the cave, called Nam mkha' lding, on the "Garuda-nest hillock," may have been there. There is also a Nam mkha' lding in Dwags lha sgam po, so it may have been Mal nag pa's retreat-place. According to the *Rosaries*, Mal nag pa felt that this place was not isolated enough and he moved higher up in the mountain in order to avoid distractions, to a hermitage called Bird-Nest Ermitage (Bye'u tshang dgon pa). Kun dga' rdo rje spent three years there and received completely the rNgog pa transmission,

[1118] See a biography of Mal Ka ba can in BA, 888 (*Deb sngon*, 1038).

which he experienced under the guidance of this master, considered to have reached the ninth bodhisattva level.

Another disciple from the Mal clan, more famous than Mal nag pa albeit not as instrumental for the rNgog lineage, was Mal Yer pa ba (1105-1170), a cotton-clad yogi who figured among Bla ma zhang's main masters.[1119] According to the *lHo rong chos 'byung*,[1120] he met rNgog mDo sde in gZhung around 1130 and received *Pañjara*, *Hevajra* and *Mahāmāyā* from him.

3.2.6.5. Ram rDo rje grags

One of mDo sde's disciples is called Ra rDo rje grags pa in ST1. It is likely that for many readers, if not for the scribe of ST1, this refered to Rwa Lo tsā ba rDo rje grags, who is otherwise described as mDo sde's master. In ST2, ST3 and the *lHo rong chos 'byung*, the name Ra**m** rdo rje grags is given, pointing to a different family, that of the Ram from Klu gong (or 'O yug Klu gong, a valley north of the gTsang po, in gTsang). Several members of that family taught or studied with the rNgog: an uncle of Ram rTsan can taught *Nāmasaṃgīti* to Chos rdor, Ram rTsan can studied *Hevajra* with him, and mDo sde met him at his father's demand but declined his teaching. Ram rDo rje grags was Ram rTsan can's nephew. He received the *Hevajra* transmission from his uncle and is considered in the *Rosaries* to be the recipient of an important rNgog lineage, that of *Vajrapañjara*, which came back in the rNgog family after a few generations:[1121]

> Lineage of the Combined Families: mDo sde, Ram rdo rje grags, bKa' lung Snyan sgom, mNga' ris pa Byang tshul, rGya pho ba lung pa, to both [rNgog] rGyal po dga' and [rNgog] Seng ge sgra.

I will argue in more details in the part on Ra mo's disciples (II.3.3.2.2) that it would be better to emend this lineage, and read "Ra mo" instead of "Ram," which is to say that mDo sde gave *Pañjara* to his grandson, who gave it to his three main disciples, who in turn transmitted it back within the rNgog family. Ram rDo rje grags, however, did also receive the rNgog tradition of *Pañjara* from mDo sde, as indicated in Ngor chen Kun dga' bzang po's record of teachings received:[1122]

> Mar pa lHo brag pa, rNgog Chos kyi rdo rje, his son mDo sde, Ram Klu gong pa, Gror bsam phug pa, the teacher from mNga' ris called dKon mchog 'bar, the

---

[1119] Yamamoto 2012, 59-62, and Sørensen and Hazod 2007, 1: 79, n. 33.

[1120] *lHo rong chos 'byung*, 160.

[1121] ST1, 8.4-5; ST2, 33.3-4.

[1122] *Ngor chen thob yig*, 320: *mar pa lho brag pa/ rngog chos kyi rdo rje/ sras mdo sde/ ram klu gong pa/ gror bsam phug pa/ mnga' ris kyi ston pa dkon mchog 'bar/ rgya mkhar ngo mar gyi mkhan po 'phags skyabs/ rgyang ro gser sdings kyi grub thob ston gzhon/ ma ngag dge sdings kyi slob dpon chos 'od/ bla ma sangs rgyas 'bum/ lo mchog/ mkhas mchog/ kun mkhyen chen po* [Bu ston]*/ byang seng ba/ sa bzang 'phags pa/ des bdag la'o* [Ngor chen]. See also p. 5: *Gong dkar gsan yig*, 5: *mar pa/ rngog mdo sde/ ram klu gong pa/ gram phug pa dkon mchog mkhar/ tshul khrims skyabs/ 'phags skyabs/ ston gzhon/ chos 'od/ dbus pa sangs rgyas 'bum/ bla ma 'phags pa* […]

> abbot of rGya mkhar ngo mar called ’Phags skyabs, the accomplished one and young teacher from rGyang ro gser sdings, the master from Ma ngag dge sdings called Chos ’od, the lama Sangs rgyas ’bum, Lo mchog, mKhas mchog, the Great Omniscient [Bu ston], Byang seng ba, Sa bzang ’phags pa, me [Ngor chen 01]

It is possible that a trace of that tradition is preserved in one of the commentaries on the *Vajrapañjaratantra* preserved in the NKSB.[1123] In the colophon to that text, the following lineage is described:

> [This comes from] Tilopa, whose name was blessed by Tāra; Nāropa, who abided well in his instructions; the One from lHo brag, who had respect for the dust on his feet; the monk rDo rje grags, who pleased him; and Phunaratna, who abided well in his instructions. The latter, respectfully requested [to do so] by rGya ston, put it to writing with a benevolent intention.[1124]

Many things are unclear in this colophon, to begin with the identity of the author, Phunaratna. This may refer to someone called bSod nams rin chen (skt: Puṇyaratna), maybe Bya khang pa bSod nams rin chen (TBRC P3076), a disciple of ’Khon Gad pa kīrti who held mTshur ston’s lineage of *Guhyasamāja*. rDo rje grags may or may not be Ram, who is not known for being Mar pa’s disciple. In the absence of more information, it is difficult to account for the author of this commentary and his lineage, despite the fact that it certainly represents Mar pa’s tradition, but it seemed however fit to present it shortly in this part of mDo sde’s disciples, where it is the most likely to belong.

3.2.6.6. gTsang sMra seng

sMra seng from gTsang is only mentioned in the *lHo rong chos ’byung*. It is likely that the name can be expanded as gTsang ston sMra ba’i seng ge, which is an alias of lCe ston mDo sde seng ge.[1125] That master came from the lCe clan, and was based in Sri’u gcung, also known as Sribs cung, in gTsang. There is a rosary of biographies of the masters from Sri’u gcung initially published in the LGNT, and included in the NKSB,[1126] probably on the account that gTsang sMra seng met rNgog mDo sde and his grandson rNgog rGyal tsha rDor seng (1140-1207) and received most of their transmission. As mDo sde died in 1154, it is likely that sMra seng met him when he was very young, and later studied mainly with rDor seng. He appears several time in Bu ston’s *gSan* yig, as a disciple of rGyal tsha rDor seng’s

---

[1123] *rDo rje gur gyi Tikka*, NKSB, 18: 83-198.

[1124] NKSB, 18: 198: *sgrol mas byin brlabs ming ni tai lo pa/ /de’i man ngag legs gnas nā ro pa/ /de’i zhabs kyi rdul gus lho brag pa/ /de mnyes byas pa’i dge slong rdo rje grags/ /de’i gdams ngag legs gnas phu na ratna/ /gus dang ldan pas rgya ston gsol btab pas/ /phan pa’i bsam pas yi ger bris pa yis/ /sems can thams cad ’di don rtogs par shog/ /rdzogs so/*

[1125] See his biography in NKSB, 23: 256-269. This alias is said to be a *gnyan ngag gyi mtshan* (LGNT, 42: 28), maybe a poetic, or more likely tantric name, given to him by rNgog mDo sde.

[1126] LGNT, 42: 31-91, republished in NKSB, 23: 251-313.

student, Yo lcags jo mdo, for the *Pañjara* transmission,[1127] and as mDo sde's for *Nāmasaṃgīti*.[1128]

lCe ston's biography is rather generous in details about the transmissions he received from his various masters, so it is especially interesting to see for which transmissions the rNgog were famous in the 12th century,[1129] and especially that the rNgog held a very large amount of tantric transmissions that went well beyond the core transmissions received from Mar pa.

The *lHo rong chos 'byung* also refers to another of mDo sde's disciple, called gTsang lHa steng. Someone with this name appears in Bu ston's *gSan yig*, as a master of lCe mJo mdo.[1130] As sMra seng's disciple is also called lCe mDo seng, and as a Yo lcags Jo mdo was among rGyal tsha rDor seng's disciples, I wonder whether lHa steng and sMra seng are not two names for the same person. This is backed by Bu ston's *gSang 'dus chos 'byun*g, where one of rDog Āryadeva's master is called Rong lHa steng gi rTsang smra seng.[1131] In that same text, he is also said to be lCe ston mDo seng's teacher.

3.2.6.7. Cog ro Chos rgyal

Cog ro Chos kyi rgyal msthan (1108-1176) does not figure among mDo sde's disciples in the *Rosaries*, but is mentioned as such in the *Deb ther sngon po*.[1132] As he was considered a major commentator of the *Cakrasaṃvaratantra* by Bu ston[1133] and played an important role in the diffusion of mDo sde's teachings on *Saṃpuṭa* in the Tangut Kingdom, it is worth examining what is known about him.

According to the *Deb ther sngon po*, Cog ro Chos kyi rgyal msthan was born in mDo smad (i.e. A mdo) and came to Central Tibet in his nineteenth year. He studied philosophy at rGya mar in sTod lung, where he met Mar pa do pa's son, Jo sras Nam mkha', as well as Phag mo gru pa, and others. From Jo sras, he studied lesser precepts of *Cakrasaṃvara*, and later met Mar pa do pa, from whom he received the complete transmission. He also went to the gZhung valley, where he studied *Hevajra* and *Mahāmāyā* with rNgog mDo sde, and composed a now lost commentary on the *Hevajratantra*. Later in life, he practiced in gNam mtsho, founded the Me dge lha 'tsho monastery and most probably played a large role in the diffusion of the *Cakrasaṃvaratantra* in the Tangut Kingdom, a kingdom to the North-East of the Tibetan cultural region which lasted from 1038 to 1227.

The link between Cog ro and the Tangut Kingdom is still rather nebulous, although several Chinese scholars have contributed to its study. Cog ro Chos kyi rgyal msthan's commentary on the *Cakrasaṃvaratantra*, praised by Bu ston and Tsong kha pa, is extant in neither Tibetan

---

[1127] Bu ston *gSan yig*, 109-110.

[1128] Bu ston *gSan yig*, 126; see also *Gong dkar gsan yig*, 147.

[1129] NKSB, 23: 257-259.

[1130] Bu ston *gSan yig*, 114, for *Mahāmāyā*, and p. 126 for *gSang ldan*.

[1131] *gSang 'dus chos 'byung*, 80

[1132] The following explanations are based on Hou 2017, BA, 386, and DND, 18: 91-93.

[1133] See Kun dga' grol mchog's *Khrid brgya'i brgyud pa'i lo rgyus* in DND, 18: 92.

nor Tangut, but a Chinese translation attests its existence. It was studied by Wei Wen in his doctoral dissertation at Renmin University (Beijing).[1134] According to him, this translation was derived from a Tangut one. In an article on the translation and transmission of the *Saṃpuṭatantra* in the Tangut Period,[1135] Haoran Hou convincingly argues that this *Cakrasaṃvara* commentary may be related to a Tangut translation of a *Saṃpuṭa* commentary recently found in the ruins of a pagoda in Baisigou, in today's Helan County (Ningxia, China), an important monastery of the Tangut Kingdom. To understand the relationship between these various texts, it is important to remember that *Saṃpuṭa* is considered an explanatory tantra common to *Hevajra* and *Cakrasaṃvara*.

Recent Chinese research showed that *Cakrasaṃvara* and *Saṃpuṭa* were the most important tantric transmissions in the Tangut kingdom.[1136] The Tangut translation of the *Saṃpuṭatantra*, attributed to the Tangut translator Piputifu, is based on the Tibetan translation by 'Gos Khug pa lHas btsas, unlike the version preserved in the *bsTan 'gyur* that is by 'Brog mi. Piputifu also translated three commentaries on that tantra, which, according to the Tangut text, were compiled by rNgog Zhe sdang rdo rje.[1137] These texts may be translations of one or more of mDo sde's writings on the topic, one of which, an explanation of the *Saṃpuṭatantra*, is today extant.[1138] As mentioned earlier, mDo sde did not receive this transmission from a lineage coming from Mar pa and his father, but from both Chag Lo tsā ba and Rwa Lo tsā ba.

Piputifu received these transmissions from someone called Mi la Mi bskyod rdo rje. He does not figure among mDo sde's disciples, so Hou argues that Mi bskyod rdo rje may be a disciple of Cog ro Chos rgyal, and it was the latter who actually introduced *Cakrasaṃvara* and *Saṃpuṭa* into the Tangut Kingdom. Despite the uncertainties that still remain, it seems fair to conclude that the presence of the rNgog pa tradition of *Saṃpuṭa* in the Tangut kingdom is a witness to the large influence of their tantric transmission at mDo sde's time. Just like the rNgog tradition of *Hevajra* was well-known for its quality, it seems that Cog ro's commentary was widely praised. Although Cog ro himself received *Cakrasaṃvara*–and probably *Saṃpuṭa*–from his main master, Mar pa do pa, he may as well have received it from mDo sde. According to Hou, who studied mDo sde's commentary on the *Two Segments*,[1139] his explanation on *Hevajra* contains some amount of quotation of the *Saṃpuṭatantra*. It is therefore possible that mDo sde reintroduced that explanatory tantra into his exegesis of *Hevajra*, which, at Mar pa's time, was famous for relying only on the *Vajrapañjaratantra*.

[1134] Wei 2013.

[1135] Hou 2017.

[1136] Wen Wei presented a paper on "The Transmission of Cakrasaṃvara Cycle from Northwest to Northern China during the 12-15th Century" at the ISYT in Leipzig in 2015 but did not produce an article.

[1137] See Hou 2017, 362: Hou's argument on why the Tangut name E Fennu Jingang corresponds to the Tibetan name rNgog Zhe sdang rdo rje sounds convincing to me, although I do not have the language skills to assess it.

[1138] *dPal sambu ṭa'i rnam bshad gzhung gsal ba'i sgron ma*, NKSB, 5: 88-252.

[1139] *dPal brtag pa gnyis pa'i 'grel pa rin po che'i rgyan dang 'dra ba*, NKSB, vol. 3.

3.2.6.8. sMar pa Shes rab ye shes

sMar pa Shes rab ye shes (1135?-1203) was from sMar khams in Eastern Tibet, where he founded the Sho dgon Monastery in 1167 and gave rise to the sMar pa bka' brgyud order, one of the eight secondary bKa' brgyud lineages branching from Phag mo gru pa rDo rje rgyal po (1110-1170).[1140] Although he is not mentioned among mDo sde's disciples, it is stated in his biography that he met him in the end of mDo sde's life and received many transmissions from him.

sMar pa went to Central Tibet in his early 20s. There, he first studied in gSang phu and then went to learn the tantras in gZhung,[1141] where he met "rNgog gZhung pa." This presumably refers to rNgog mDo sde, who was then a very old man.[1142] sMar pa received the *Two Segments*, *Pañjara*, *Mahāmāyā*, *Saṃputa*, *Nāmasaṃgīti* and other cycles from him. He was also granted many key-instructions and remained three years in gZhung. A friend asked him to accompany him to gTsang in order to receive *Guhyasamāja* but he reflected that he had better stay near a master with Nāropa's instructions rather than running around endlessly after the Dharma, and so he decided to stay in order to receive Nāropa's instructions on the six doctrines. Finally, he left for bSam yas together with mDo sde's grandson, Ra mo (1134-1170). There, he met 'O khri seng ge dpal, who led him to Phag mo gru, where he met the great master rDo rje rgyal po, who became his main lama. He soon fell very sick and began spitting up blood. At that time, he had a vision of Dud sol ma "like on the thang ka" riding up on a donkey from the lower valley of Phag mo gru. He offered a *gtor ma* to her and she told him she was coming from gZhung ri bo to visit him as people said he was sick. At that period, he also had a vision of Nairātmyā.

This anecdote is noteworthy for its association of the rNgog with Dud sol ma, who is pictured as living in gZhung, and because the painting in question (or perhaps an ancient copy) figures is Alain Bordier's collection. In it, Dud sol ma is represented on a donkey, presumably according to sMar pa's vision. The names of Mar pa, Zhe sdang rdo rje and sMar pa Shes rab ye shes are inscribed above the lamas depicted in the upper register of the painting.[1143] The painting dates perhaps to two generations after sMar pa as only one further lama is represented.

[1140] There are several biographies, included a short one by Dan Martin: http://treasuryoflives.org/biographies/view/Marpa-Sherab-Yeshe/3469 (accessed 2017/06/05). I am using a long one written by a monk called Chos kyi ye shes, presumably sMar pa Shes rab ye shes' disciple, in the 2006 computerized version.

[1141] Chos kyi ye shes 2006, 6-7, for the part on gZhung. See also p. 16 where sMar pa shares with Phag mo gru pa mDo sde's instructions coming from Nāropa.

[1142] According to the *lHo rong chos 'byung*, mDo sde died in 1154. That same text (p. 774) states, with some uncertainty, that Shes rab ye shes was born in 1135: *gzhan dang bstun na dgung snying shing mo yos yin pa 'dra*. I think sMar pa may have been born a bit earlier if he met mDo sde.

[1143] Schroeder 2009, 18-19, Béguin 2013, 91-93. There is a fourth name in the upper register, *'gro mgon sangs rgyas ye shes pa*, unidentified, who may be a disciple of sMar pa Shes rab ye shes. This means that the painting may be dated to the late 13th century.

3.2.6.8. Tshe'u bande dar re?

Tshe'u/'Tshe'u Dar re[1144] is only mentioned in the *Deb ther dmar po* and *Deb ther sngon po* as being mDo sde's disciple,[1145] without further detail. Although the *Rosaries* do not name him, the NKSB reproduce two texts with his name in the colophon, foremost among which a large commentary on *Hevajra* according to the rNgog tradition.[1146] One finds in it a long historical passage in which he describes the twelve hardships of Nāropa as well as Mar pa's and Chos rdor's life,[1147] with no mention of mDo sde. He states, however, that he received four transmissions from Chos rdor, those of *Pañjara*, *Hevajra*, *Mahāmāyā* and *Catuṣpīṭha*.[1148] In the colophon, he states that he heard the teaching on the *Hevajratantra* from "several rNgog from gZhung,"[1149] and it is unclear why a plural is used. He may have been a direct disciple of both Chos rdor and mDo sde, but as Chos rdor died when mDo sde was twelve, the age difference is difficult to account for. Another possibility is that he was only Chos rdor's disciple, but studied with another rNgog contempory to Chos rdor and responsible for passing on the rNgog tradition. A hint backing the second solution is a remark in the *Deb ther sngon po* to the effect that, after Chos rdor's death, as mDo sde did not like Ram's transmission, he studied *Hevajra* with "rNgog."[1150] In Bu ston's record of teachings received, Chos rdor gives the *Pañjara* transmissions to sPa, rNgog and rGya, and the three of them hand it over to mDo sde.[1151] There are among Chos rdor's students several with the name rDog, a name often transcribed as rNgog in other sources (see part II.3.1. above). That rDog/rNgog may have been Tshe'u da re's master. In any case, despite his classification as mDo sde's disciple in the *Deb ther dmar po* and the *Deb ther sngon po*, it seems clear that he was rather Chos rdor's.

3.2.6.9. Bla ma zhang?

Bla ma Zhang (1123-1193) was rNgog mDo sde's junior by 45 years and could have met him in the end of mDo sde's life. Both Per Sørensen and Carl Yamamoto[1152] consider that mDo sde was Zhang's first root-teacher, but he does not figure among mDo sde's disciples, which

---

[1144] His name is written Tshe'u in the colophon to his two works but 'Tshe'u in the two religious histories.

[1145] *Deb dmar*, 76; *Deb sngon*, 493.

[1146] *dPal dgyes pa rdo rje brtag pa gnyis pa'i 'grel pa rin po che'i rtsar phreng*, vol. 19; *rTsa ltung bcu bzhi pa yan lag dang bcas pa'i bshad pa*, vol 18: 276-314. The *Hevajra* commentary is typical of the rNgog tradition with its part on "how this tantra was brought into the human realm," NKSB, 19: 15-30. For details, see I.1.4.

[1147] NKSB, vol. 19, respectively pp. 16-26, 28, 29-30.

[1148] NKSB, 19: 30: *de rnams phul yang bla ma [chos rdor] la chos mang po mnga' te/ ngas gur rtags gnyis ma hā mā ya rdo rje gdan bzhi de rnams las ma phrel ba yin gsung ngo*.

[1149] NKSB, 19: 470: *mar pa lo tsha'i thugs kyi sras/ rngog ston gzhung pa* ***dag*** *las thos*, "I heard it from several rNgog from gZhung, who are the heart-son(s) of Mar pa Lo tsā ba."

[1150] *Deb sngon*, 492: *gtsang du ram gyi sar byon pas/ dang ngos la ma mgu bar log nas rngog la gsan pa mdzad*. BA, 407: "His father said in his Last Will that he had to study the cycle of *Hevajra* under Ram. Accordingly, he proceeded to gTsang to the residence of Ram, but they did not receive him in a proper manner, and he returned back and studied under rNgog."

[1151] Bu ston *gSan yig*, 109.

[1152] Sørensen and Hazod 2007, various pages but mainly 1: 77, n. 19. Yamamoto seems to simply follow Sørensen's lead, with some confusion between rNgog mDo lde (sic) and rNgog sTod lung pa.

is rather puzzling when one considers the important role he played in 12th-century Central Tibet, and for the bKa' brgyud school in general.

Bla ma Zhang declares in the autobiographical list of his 44 teachers that his first root-guru was rNgog sTod lung pa chen po.[1153] Nowhere have I seen rNgog mDo sde called thus. He is always called rNgog gZhung pa. sTod lung, the region to the north-west of lHa sa, was closer to the fief of the other branch of the rNgog family, whose prominent members were at gSang phu, or to that of rDog Byang chub 'byung gnas, who was the abbot of Yer pa Ba reng monastery near lHa sa. It would therefore seem more appropriate to consider that rNgog sTod lung pa chen po was an heir to one of these lines.

In the *Deb ther sngon po*,[1154] 'Gos Lo tsā ba states that in his eleventh year, Zhang met rNgog mDo sde and received *Hevajra*, *Pañjara* and *Mahāmāyā* from him, which sounds credible. This, however, is a very shortened list of Zhang's own list, which states that he studied the following transmissions:

> mDo sde rgyan, spyod 'jug, sngags yo ga'i stod 'grel, gtsug dgu, mtshan brjod 'grel ba bar ma, gsang ldan ma, a ro ka ra, ro sreg rgyal po'i sgrub thabs la sogs pa sgrub thabs che chung, sgron gsal, gur brtag gnyis, mtsho skyes, dpa' bo gcig pa, rdo rje rnam 'joms, phyag na rdo rje, 'gro bzang ma la sogs pa sgrub thabs che chung, dmigs pa skor gsum.

Some items in this list (underlined) could have been transmitted by mDo sde. Some, however, do not fit, especially the *Sūtrālaṅkāra* and *Bodhicaryāvatāra*, which would correspond better to the curriculum of gSang 'phu.

The *lHo rong chos 'byung* declares in a gloss that it was mDo sde's son Thogs med grags (1108-1144) that Zhang met.[1155] With him, Zhang studied the teachings of the rNgog tradition (with no precision). But again, Bla ma Zhang does not figure among Jo thog's disciples. The *Deb ther dmar po* declare that Bla ma Zhang attended the Nya mo gyur council when Mar pa's relics were received by rNgog mDo sde and that Ra mo requested him to preside over the consecration of Mar pa's reliquary. This is possible, all the more because the author of this account received teachings from rNgog Rin chen bzang po hence may have had reliable sources (see part I.1.3.2), but it does not mean that Zhang was mDo sde's disciple before that date.

Thus, although reliable sources—'Gos Lo tsā ba, the *lHo rong chos 'byung* and Per Sørensen—consider that Bla ma Zhang studied with the rNgog, either mDo sde or Jo thog, I doubt it for two main reasons: the rNgog from gZhung are never called sTod lung pa, and Zhang is never mentioned among their students. Given the hazy indications in the sources, and the contradictory claims of the *lHo rong chos 'byung* and the *Deb ther sngon po* (which are, however, perfectly clear with regards to the lists of rNgog's disciples), I would think that

---

[1153] Zhang *gSung 'bum*, 1: 310.

[1154] BA, 712 (*Deb sngon*, 833)

[1155] *lHo rong chos 'byung*, 182.

they too were confused regarding the identity of this rNgog sTod lung pa. Given the list of teachings provided, rNgog mDo sde (or his son) was as good a guess as any other. To my eye, the question remains unsettled.

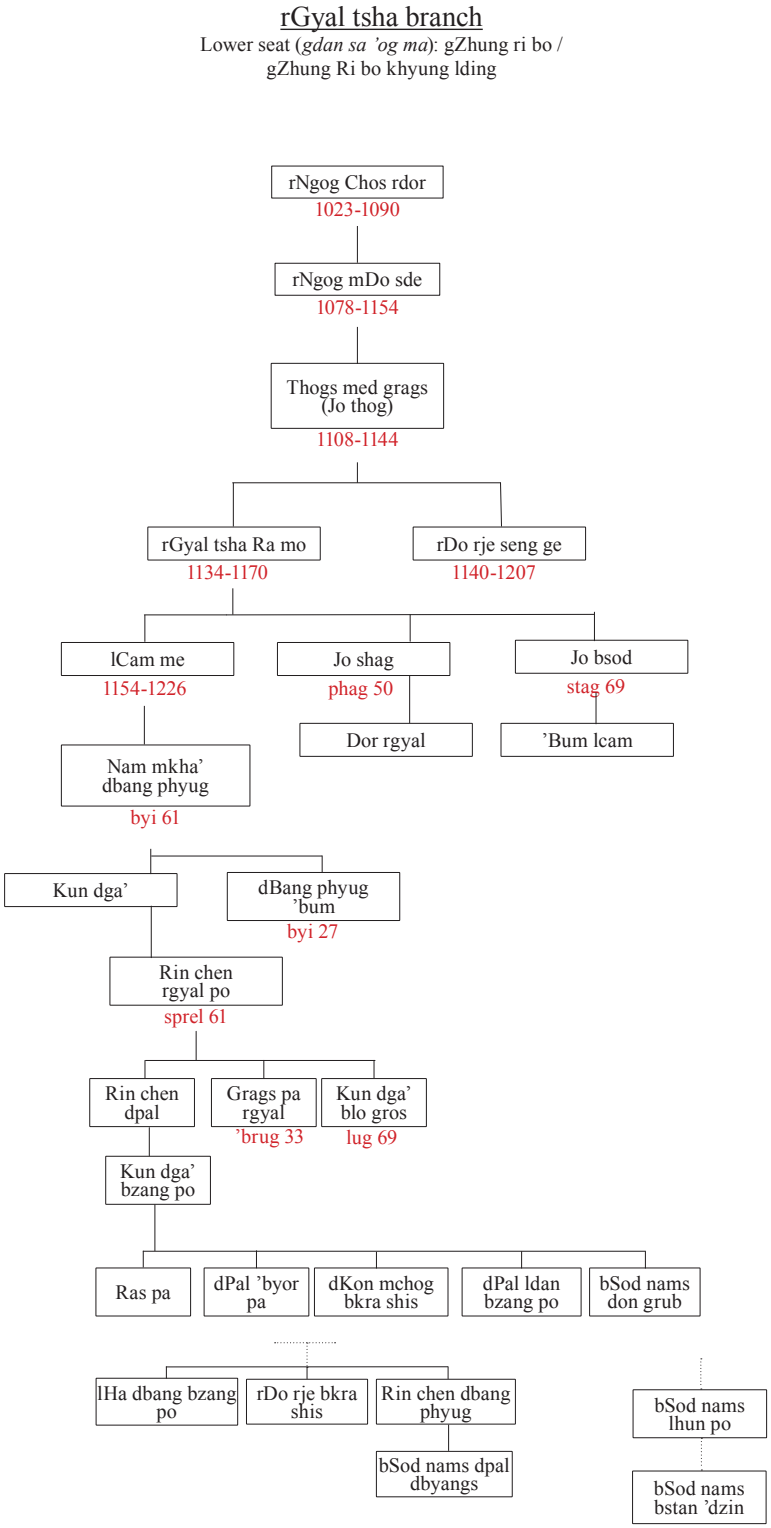

Plate 12: rGyal tsha line according to ST1, ST2, *Tshar chen rnam thar*.

3.3. rGyal tsha branch

> Master[1156] Jo thog *([formed] the lower [rNgog] line, called the rGyal tsha line. With his wife, 'Phrang po lHa cig 'bum rgyan)*, he had two sons, *master* rGyal tsha Ra mo and *master* rDo rje seng ge. Master Ra mo *(and his consort Shi sha dur ma)* had three sons: Master lCam me; Jo shag *(his son was Master rDor rgyal)*; and Jo bsod *([his son] was 'Bum lcam)*. Master lCam me *(and his consort dPal 'bum)* had one son, Master Nam mkha' dbang phyug. He *(and his consort 'Khos mchog **from Ya kha**)* had two sons, Master Kun dga' and dBang phyug 'bum. Master Kun dga' *(and his consort dGa' sham mo **from Yar lungs**)* had one son, Master Rin chen rgyal po. He had three sons, Master Rin chen dpal; Master Grags pa rgyal mtshan; and Master Kun dga' blo gros. [Rin chen dpal] *(and his consort 'Dran brgyan)* had one son, **lama** Kun dga' bzang po. **He had five sons: Lama Ras pa, Lama dPal 'byor ba, mKhan chen dKon mchog bkra shis, Master dPal ldan bzang po, and the Dharma Lord bSod nams don grub pa. Altogether, they had three sons: Master lHa dbang bzang po, Master rDo rje bkra shis and Master Rin chen dbang phyug. The latter's son was bSod nams dpal dbyangs.** They are the successive members of the human line.

The two branches of the rNgog from gZhung, gTsang tsha and rGyal tsha, were formed from mDo sde's two elder sons, who had different mothers. These lines came to be known, perhaps after the foundation of sPre'u zhing, as the "higher branch" and the "lower branch" respectively. Through the next centuries, they continued to live close-by and, as the *Rosaries* evidence, considered themselves as a kin group. In the *Rosaries*, less detail is provided for the rGyal tsha line than for the gTsang tsha line, and their denomination as "lower branch" suggest that it was the sPre'u zhing branch that was most influential. The rGyal tsha maintained the family house of Ri bo khyung lding, while Kun dga' rdo rje founded sPre'u zhing to house the relics of Mar pa and mDo sde. By welcoming the relics, and perhaps also for his personal qualities, Kun dga' rdo rje thus erected what was seen as the legitimate seat of the rNgog although it did not exist during Chos rdor's and mDo sde's lifetime.

Despite the later influence of the gTsang tsha branch, the first two rGyal tsha generations played a crucial role in the transmission of the rNgog tradition, as mDo sde's first born, Jo tshul, had only a distant relationship with the seat, and his son, Kun dga' rdo rje, was only nine when mDo sde died. In the meantime, Jo tshul's brother Jo thog was a successful exegete of the tradition, and his son, Ra mo, took over the seat and its responsibilities at twenty. At the time of mDo sde's death in 1154, he was the only rNgog lineage-holder, and thus oversaw the education of his kin and the continuation of the lineage, although he did not leave any commentaries.

[1156] ST1, 7: 1-2; ST2, 32: 1-2 (underlined) continues the lineage at the point where ST1 breaks off; ST3, 81 (**bold**). The names of the consorts that appear as notes in ST1 are omitted in ST2 but are provided in ST3, which breaks off at the same point than ST1.

As for the later generations, although the names of the wives and sons, and most dates of birth are provided, not much information is available. They probably continued to receive and practice the rNgog teaching, but remained in the shadows as the *Rosaries* were written within the gTsang tsha branch and as they did not leave written traces. Several of them had a religious role. rGyal tsha Rin chen dpal for instance appears as the master of the author of ST1 in a lineage of Dud sol ma. Later, bSod nams don grub gave several transmissions to the neighboring founder of the Gong dkar chos sde Monastery, Kun dga' rnam rgyal (1432-1496), and the last of the known rGyal tsha rNgog, bSod nams bstan 'dzin, taught mNga' ris Paṇ chen Padma dbang rgyal (1487-1542) and Tshar chen bLo gsal rgya mtsho (1502-1566/7). The latter two left writings on *Dud sol ma*. As their life-story is not related in the *Rosaries* and because they were active after Byang chub dpal, their life-story is presented in section II.5.1.

3.3.1. Thogs med grags (1108-1144)

> Master Jo thog gave teachings **(on *Pañjara* and *Hevajra*)** in his twelfth year. He received all instructions, reading transmissions, **(empowerments and commentaries coming from the Venerable Mar pa, Kyi Bye ma lung pa and Khams pa Shes rab rdo rje)** from his father. He listened to the Cycle of the Nobles (*'Phags skor*) from rDog Mun pa can. In Yar lung, he listened to the *Great Commentary on Root Downfalls* from sPug rGya ga ra **dz**a. In 'Phan yul, he requested the Protector with a Club from a disciple of Mar pa mGo yags, and also composed a short commentary on it.[1157]

rNgog mDo sde's second son is known by several names. In the *Rosaries*, he is generally called Jo thog. His complete name is Thogs med grags pa, or more generally Thogs med grags, which corresponds to the Sanskrit Asaṅgakīrti. The Sanskrit name is used in the lineages of ST1 and in some colophons.

According to the *Rosaries*, Jo thog was born in a rat year, 1108 for the *lHo rong chos 'byung* and 1120 for the *Deb ther sngon po*. He was the first born of mDo sde's wife, Jo skyabs, who had three other sons after him, Jo 'od, Jo bsod and Jo bde. mDo sde's daughter, sTon chung dbang mo, may not be the child of Jo skyabs, but that of another wife, Jo non.

With him started the rGyal tsha branch of the rNgog family. Just as the name "gTsang tsha" comes from Jo tshul's mother, who was from gTsang, the name "rGyal tsha" may come from Jo thog's mother's Jo skyabs. No detail on the topic appears in the *Rosaries*; maybe she came from the rGyal valley, in the 'Phan yul region north of lHa sa?

Jo thog's own wife was called lHa cig 'bum rgyan and came from 'Phrang po, a region on the northern bank of the gTsang po, opposing the gZhung valley.[1158] She gave him two sons,

---

[1157] ST1, 14: 7-8; ST2, 40: 3-4, ST3, 82. The *lHo rong chos 'byung*, 57 erroneously attaches this information to the part on Ra mo.

[1158] See Sørensen and Hazod 2007, 1: 180, n. 428, map p. 301). That the name 'Phrang po refers to her region and not to her personal name is made clear in ST3 where she is called lHa cig 'bum rgyan Phrang po ba.

rGyal tsha Ra mo and rGyal tsha rDor seng. Jo thog died in his "obstacle year" (*lo kag*), in 1148, ten years before his father, when his sons were quite young, ten and four respectively, and one year before the son of his half-brother, Kun dga' rdo rje, was born. Jo thog's sons and their cousin studied with mDo sde, and the oldest, Ra mo, took over the education of Kun dga' rdo rje when mDo sde died in 1154.

Although Jo thog died in his thirty-seventh year, he was very learned and composed many manuals and commentaries. According to ST2, he taught specialties of the rNgog tradition such as *Vajrapañjara* and the *Two Segments* already in his twelfth year.

He received all the rNgog traditions (empowerments, commentaries, and reading transmissions on the seven maṇḍalas) from his father, rNgog mDo sde. As shown above (section I.2.), this refers to the transmissions rNgog Chos rdor received from Mar pa (*Hevajra* male and female together with the explanatory tantra of *Vajrapañjara*, *Catuṣpīṭha* male and female, *Mahāmāyā* and *Dud sol ma*) and to *Nāmasaṃgīti*, that Chos rdor received twice, from Bye ma lung pa Chos kyi seng ge and Khams pa Shes rab rdo rje.

On top of the family transmission, he also received teachings from other masters. In particular, he received *Guhyasamāja* of the Noble Tradition (*'Phags skor*) from rDog Mun pa can. *Guhyasamāja*, although an important transmission of Mar pa, was not handed down to Chos rdor but to mTshur ston, and mDo sde also did not request that teaching. Jo thog received it from rDog Mun pa can, whose identity is not completely clear. As mentioned earlier, one of Chos rdor's disciples was called thus, and Chos rdor asked mDo sde to study *Mahāmāyā* with him. Jo thog's master may or may not be the same. It seems likely, however, that rDog Mun pa is rDog Mu ni, alias rDog Nyi ma seng ge, holder of the "rDog Tradition" of the *Guhyasamāja* descending from 'Gos Lo tsā ba Khug pa lHas bstas (see part II.2.2).

In Yar lung, Jo thog listened to the *Great Commentary on Root Downfalls* (*rTsa ltung rgya cher 'gre*l *pa*) from the "Indian King sPug," and composed a commentary, notes and an outline on the subject.[1159] That text, the *Vajrayānamūlāpattiṭīkā* (*Rdo rje theg pa'i rtsa ba'i ltung ba'i rgya cher bshad pa*, tōhoku 2488), was composed by *Mañjukīrti ('Jam dpal grags pa). It explains the root downfalls of tantric commitments. There are two commentaries on it in the NKSB, but neither corresponds to the lineage of transmission mentioned in the *Rosaries*:[1160]

> As for the lineage of the *Large Commentary on the Root Downfalls*: *Mañjukīrti; Vīryapā, Padmapāda; Somakri [?]; Vajrahasa; Vajrayanta; Āryadeva; Candrapā; Lama Can dhe ba [?]; the Newar 'Phan stengs pa [Phamthingpa]; mTha' bzhi'i lo tsā ba; sKu ston Chos rgyal; sPug rgya ga ra dza; Asaṅgakīrti [Thogs med grags]; lHo nag sMon lam khri; guru Ānanda **(Lama Kun dga' rdo rje)**; *Tejaḥkīrti [gZi brjid grags pa]; Siṃhanāda [Seng ge sgra]; Ratnabhadra [Rin chen bzang po]*.

[1159] ST1, 20: *rtsa ltung rgya che 'grel yar lung su spug rgya gar ra bya ba la zhus nas/ de'i ṭi ka/ chan/ sa bcad/*
[1160] ST1, 8.1; ST2, 33.4.

In the first text contained in the NKSB, the lineage starts identically, but after Candrapā it goes to Atisha and his translator, rGya bTson ’grus seng ge.[1161] The reason for the text’s inclusion in the NKSB, especially among Chos rdor’s writings, is unclear, and it is not part of the NKCK. The second text on the topic in the NKSB was composed by Tshe’u bande Dar re. He figures among mDo sde’s disciples in the *Deb ther sngon po* and may have studied with Chos rdor as well. He received the transmission of *Mañjukīrti’s text from sMan chu lung pa.[1162] Thus, it seems that none of the texts in the NKSB is by Jo thog and they are not related to his exact tradition.

Although the lineage of the *Large Commentary on the Root Downfalls* may be traced back to Jo thog, mDo sde is also considered to have composed various writings and notes on the fourteen root downfalls, without further detail. This topic being central for any Vajrayāna practitioner, it is likely that *Mañjukīrti’s text was much studied. It is therefore difficult to pinpoint which was the commentary composed by Jo thog, and the specificity of the lineage he received by the “Indian King sPug.”[1163] The identity of this master too is mysterious. I chose to translate his name as indicated in the *lHo rong chos ’byung* (*spug rgya gar rā dza*), although the possible Sanskrit is transcribed differently in the *Rosaries*.

In ’Phan yul, Jo thog requested the Protector with a Club (*mGon po Be con*) from a disciple of Mar pa mGo yags, and also composed a short commentary on it. As no such work is presently available in the NKSB, it is difficult to ascertain what this practice was and from which lineage it came.

The *Rosaries* mention compositions by Jo thog on all of the rNgog teachings except *Nāmasaṃgīti* and *Dud sol ma*, but only three of his commentaries are reproduced in the NKSB. One is a *Saṃpuṭa* commentary by rNgog mDo sde completed by Jo thog.[1164] The other two are commentaries on *Catuṣpīṭha* and *Mahāmāyā* composed by Jo thog on the basis of rNgog mDo sde’s instructions.[1165] That close relationship suggests that Jo thog worked

---

[1161] “rTsa ba’i ltung ba bcu bzhi pa ’grel pa dang bcas pa’i ṭīkka,” NKSB, 2: 245-311; lineage pp. 249-250.

[1162] “rTsa ltung bcu bzhi pa yan lag dang bcas pa’i bshad pa,” NKSB, 18: 276-314. An abdridged lineage figures on p. 314: *rtsa ba yan lag dang bcas pa ’di/ /rdo rje ’chang gis rgyud du gsungs/ /bha bi la yis rtsa bar bkod/ /’jams dbyangs grags pas bshad pas bkrol/ /sman chu lung pas bdag la gsung/ /bdag gis khyed kyi rjes ’brangs nas/ /’grel chung lam gyi sgron ma sbyar/ /dge bas ’gro kun rgyal gyur cig*. That text is in NKCK, 5: 3-31.

[1163] The name sPug rgya gar rā dza is given in the *lHo rong chos ’byung*, 57. It is written sPug rGya ga ra dza in ST1, 8.1, and dPug rgya ga ra ja in ST2, 33.5.

[1164] *dPal sambhu ṭa’i rnam bshad gzhung gsal ba’i sgron ma*, NKSB, 5: 88-253. The colophon declares: “This was composed by the great master Zhe sdang rdo rje and clarified by the ācārya Asaṅgakīrti (p. 253: *slob dpon chen po zhe sdang rdo rjes mdzad pa mi gsal ba rnams a tsarya asaṅgkīrtis legs par sbyar ba rdzogs so*).

[1165] *gDan bzhi’i ’grel pa*, NKSB, 9: 1-241; *dPal sgyu ’phrul chen mo’i rgyud kyi rnam par bshad pa bla ma’i bka’ yang dag pa gsal ba*, NKSB, 10: 1-65. The name of the *Catuṣpīṭha* commentary (*gDan bzhi’i ’grel pa*) is given here according to the NKCK. It was erroneously called “dPal gdan bzhi pa khri nyis stong pa la rtsa ba’i rgyud le’u bcu drug pa’i rnam par ’grel pa yang dag par gzigs pa” in the NKSB. The *Catuṣpīṭha* colophons states, 239: “The yogi Asaṅgakīrti compiled this in gZhung ri bo on the basis of Zhe sdang rdo rje’s key instructions” (*zhe sdang rdo rje’i man ngag la brten nas/ rnal ’byor pa a sang kirtis [=Thogs med grags] gzhung ri bor nye bar sbyar ba’o/*). The Mahāmāyā colophon is almost identical.

together with his father, and may have played a role in the writing of more of mDo sde's texts, although he is not explicitly mentioned in the colophons.

Jo thog compiled the *Catuṣpīṭha* commentary in gZhung Ri bo. It is likely that he was at the time living in the original rNgog estate higher up in the mountains, while his father had retired to another house, Nya mo kyur, lower in the valley. This was where mDo sde spent at least the last twenty years of his life, as he was informed about the birth of Jo thog's first son Ra mo in 1134 while he was there.

None of the histories mention Jo thog's disciples, which is not surprising as he died before his father mDo sde, who was the one attracting a large number of students. The picture of him that emerges is that of a promising master who inherited his father's transmissions and estate and contributed to the compilation and spread of the family lineage in his shadow. Although he could have figured among the major representatives of the rNgog transmission, it was eventually his sons, Ra mo and rDor seng, who played that role, once the overarching figure of their grandfather was gone.

3.3.2. rGyal tsha Ra mo (1134-1170)

> The son of Master Jo thog is rGyal tsha Ra mo. A wisdom *ḍākinī* declared that he was the rebirth of his aunt sTon chung dbang mo. His grandfather and father only showed him the symbols and he knew the teachings on the tantric cycles of Lord Mar pa, Ra lo, Kyi Bye ma lung pa, Khams pa Shes rab rdo rje, and others. He learned perfectly the teaching cycles on characteristics in gSang phu with master Phya pa. As, in particular, he knew unerringly the empowerments, instructions and tantras, etc., from the lineage of Nāropa, he was famed as an indisputable body of incarnation (*sprul sku*). In the voice of the venerable Zhe sdang rdo rje: "Jo thog is wiser than me, and his son Jo ra is wiser than him. If I had a wisdom such as theirs, I would not have needed to request teachings from the Black Ra." It would seem that lama Zhe sdang rdo rje knew philosophy, as is obvious in his commentary of the *Explanation of the Meaning of the Mantras* (*sngags don rnam gzigs*). This is a teaching with a lineage from Lord Mar pa.[1166]
>
> Master rGyal tsha Ra mo che: when he reached his sixth year, he knew perfectly how to read and write. In his ninth year, he taught Vajrapāṇi sTobs chen. [15] His father died when he was in his eleventh year. At that time, he gave a speech to the assembly: everyone was inspired and he was recognized as an indisputable body of emanation. On that year, he also taught the Two

[1166] ST2, 31.5-8. This part is completely absent from ST1.

Segments. It is said that he received all teachings, reading transmissions and empowerments from his grandfather [Mdo sde].[1167]

Although sTon chung dbang mo did not live beyond thirteen, she knew most of the Dharma, and so it caused much grief to the lama. As everyone was asking Jo mo sgren mo where people were reborn, the lama too sent someone to gTsang to ask her where [his daughter] would take birth. She replied that she would be reborn as his grandson in the following year. The following year, while the lama was staying in Nya mo kyur, it is said that he felt a great surge of joy when he heard that Jo ra was born. It is said that master Jo ra himself became famous for knowing the dharma without having to learn it.[1168]

In [gSang phu] gNe'u thog, he was in a group of four sons of noble families [who studied] with Phya pa. There was bSod nams rtse mo of the 'Khon, rGyal tsha [Ra mo] of the rNgog, Ne rtso of the Khu, and dPal le of the sMyos. Among them, he excelled in higher knowledge. Although he learned to proficiency [teachings] on the pāramitā[yāna], pramāṇa, debate, and so on, he did not compose important manuals, but only writings of various length, *ja rabs*, etc.[1169]

Ra mo's life

The son of Thogs med grags was known as rGyal tsha Ra mo, that is to say Ra mo from the rGyal tsha branch, Jo ra in short. ST1 also calls him Ra mo che, so it is possible that Ra mo is the shortened form of Ra mo che, the temple housing a Buddha statue in lHa sa. Jo ra was mDo sde's first grandson and was considered a reincarnation of his gifted daughter, sTon chung dbang mo, who drowned in the gTsang po when she was twelve. According to the *Rosaries*, he was recognized as sTon chung dbang mo's incarnation by Jo mo sgre mo, the old woman who had identified mDo sde as her master's reincarnation, although she must have been very old in 1134 as she was already active at mDo sde's birth in 1078.

True to his status of reincarnate, Jo ra is depicted as being gifted from a young age, knowing how to read and write at five and teaching at ten. He lost his father Jo thog in his eleventh year, but studied with mDo sde until he was twenty. At that time, he became the lord of rNgog family and lineage, and presided over the funeral ceremonies of his grandfather. He held the seat of Ri bo khyung lding for seventeen years,[1170] between mDo sde's death in 1154 and his own in 1170.

[1167] ST1, 14.7-8; ST2, 40.3-4, ST3, 82.

[1168] ST1, 22.3-6; ST2, 48.1-3.

[1169] ST1, 21.3-4. This part is absent from ST2.

[1170] *Deb dmar*, 77.

From mDo sde, he completely received all the tantric cycles of the rNgog, that is to say the six *maṇḍalas* coming from Mar pa, the *Nāmasaṃgīti*, as well as other transmissions received by Chos rdor and mDo sde, such as *Mahābala* (a wrathful form of Vajrapāṅi that Chos rdor received from Klog skya Shes rab brtsegs), and cycles mDo sde received from Rwa Lo tsā ba, such as *Saṃpuṭa* and *Vajravārāhī*. Ra mo also studied non-tantric materials with Phya pa Chos kyi seng ge (1109-1169) at gSang phu Ne'u thog, and became proficient in the vehicle of perfection, epistemology and logic, which were the specialties of Phya pa.

In Phya pa's biographies[1171] as in the *Rosaries*, Jo ra figures in a group of "the four sons of noble families" (*jo sras bzhi*). This expression shows that in the 12th century, the rNgog figured among the important families of Central Tibet, along the 'Khon and the gNyos.[1172] In this group, he was especially distinguished for his wisdom.

According to the *mKhas pa'i dga' ston*,[1173] he was also a direct disciple of sGam po pa (1079-1153), from whom he received many teachings. When he requested the monastic ordination (*tshangs spyod dge bsnyen*), sGam po pa declined, telling him that he had to continue the family line.

With his consort Shi sha dur ma,[1174] he had three sons. The elder, lCam me, was born in 1154, the year mDo sde died. Jo shag was born in a pig year, probably 1155, and Jo bsod in a tiger year, probably 1158. Nothing is known about these latter two. When Ra mo died, his sons were quite young (lCam me was 16), and it was Ra mo's brother, rDor seng, who took up his charge and possessions. After rDor seng's death, the estate was divided between Ra mo's sons, and especially lCam me, who became the next lord of Ri bo khyung lding, and their nephew Kun dga' rdo rje. The rGyal tsha branch (lCam me and his brothers) inherited the main house and the possessions of the family, and the gTsang tsha branch (Kun dga' rdo rje), inherited Mar pa's relics and other holy objects.

Disciples

> The great disciples of rGyal tsha Ra mo were rGya Pho ba lung ba, bKa' lung snyan sgom, mNga' ris pa Byang tshul, rTsags Yon tan seng ge and rDog jo sras Nyi ma.[1175]

Ra mo's (1134-1170) most important disciples, from the point of view of the later rNgog lineage, was his nephew Kun dga' rdo rje (1145-1222). He was only nine when their grandfather mDo sde died and relied on Ra mo to receive the family transmission. Ra mo had many other students who contributed to the fame of the rNgog lineage.

[1171] See an English version of Phya pa's life in Van der Kuijp 1978, and a Tibetan version in the index to the first 30 volumes of the *bKa' gdams gsung 'bum phyogs bsgrigs* (31: 57-62). The list of his disciple is in BA, 333.

[1172] About gNyos dPal le, the uncle of the famous gNyos Grags pa dpal, see Sørensen and Hazod 2007, 2: 676, n. 17.

[1173] *mKhas pa'i dga' ston*, 779.

[1174] Shi sha dar ya according to ST3, 81, Shi sha dar ma according to the *lHo rong chos 'byung*, 58.

[1175] ST1, 23.8; ST2, 49.5.

rGya Pho ba lung ba

The most famous of Ra mo's students was rGya Pho ba lung ba,[1176] who also attended the First Karmapa Dus gsum mkhyen pa (1110-1193) and Bla ma Zhang (1123-1193), and was an important figure in the transmission of Mar pa's tradition of *Guhyasamāja* and the rNam rdzong sNyan brgyud. In fact, he studied with most of the bKa' brgyud masters of his time, as 'Bri gung skyob pa (1143-1217), Chos dbyung (1103-1199), Phag mo gru pa (1110-1170), Rin chen gling pa (d.u.) and many others also taught him. He also held the Ram tradition of *Hevajra*, which then reached the Third Karma pa, Rang byung rdo rje (1284-1283). Last but not least, he was recognized as a reincarnation of Mar pa mDo sde.

In a biography preserved in the DK-DZO, he is called the "Omniscient rGya."[1177] His childhood name was rDo rje khyung, as indicated in the *Treasury of Lives*.[1178] In the *lHo rong chos 'byung*, he is presented as rGya Yon tan bzang po, his monk name,[1179] and he also appears as Yon tan grags in one of the NKCK texts.[1180] Pho ba lung is the name of the monastery he founded at bZang [ri], in the Ru mtshams region at the frontier between dBus and gTsang,[1181] and therefore close to the gZhung valley. rGya is his family name. The *Deb ther sngon po* states that his secret name was Rol pa'i rdo rje,[1182] and there are several other names in the various versions.

According to his biographies, in his eighth year (1168?) he studied *Nāmasaṃgīti* and *Vajrapañjara* (*rigs bsdus*). This transmission probably took place in gZhung, with Ra mo (who died in 1170).[1183] rGya went there again later to study with rNgog rGyal tsha rDor seng (1140-1207), and still later he taught rNgog gZi brjid grags pa, rGyal po dga' (1193-1272) and the latter's son Seng ge sgra (1211-1284).[1184] Thus, he was a prominent bKa' brgyud

---

[1176] For a bibliographical note about this master, see Sørensen and Hazod 2007, 1: 96, n. 92.

[1177] rGya Thams cad mkhyen pa, DK-DZO, 63: 162-170.

[1178] Evan Yerburgh: http: //www.treasuryoflives.org/biographies/view/Dorje-Khyung/13442 (accessed on 17/11/2015). Yerburgh quotes his source as dKon mchog rgya mtsho, 2004. *'Bri gung chos 'byung*. Beijing: Mi rigs dpe skrun khang, 346, which is based on the DK-DZO biography, and has important differences with the *lHo rong chos 'byung*. Yerburgh reckons that rGya Pho ba lung pa was born in 1161 or 1173 and died in 1249 or 1261. The DK-DZO, 63: 170 only states he died in a bird year at 87.

[1179] *lHo rong chos 'byung*, 154-159. The KGNDdkar chag, 23 calls him rGya Pho ba lung pa Yon tan grags.

[1180] NKSB, 9: 270: *rnog rgyal tsha rdor seng/ rgya pho ba lung pa yon tan grags…* The name also figures in one of the *thob yig* included in the *Gong dkar gSan yig*, 278: […] *mar pa/ rngog chos rdor/ rngog rdor seng / yon tan grags/* […]

[1181] See the location of Ru mtshams gzhu snye in Ryavec 2015, 68. BA, 426,calls his seat Ru mtshams pho ba lung. *lHo rong chos 'byung*, 158, speaks of bZang Pho ba lung. See Sørensen and Hazod 2007, 1: 97 for a discussion of these places.

[1182] BA, 449.

[1183] DK-DZO, 63: 163; *lHo rong chos 'byung*, 155.

[1184] ST1, 16-17. Note that this fits perfectly with the lineage of the *Catuṣpīṭha sādhana* in *Gong dkar gsan yig*, 289: *mar pa/ rngog chos rdor/ de'i sras zhe sdang rdo rje/ de'i sras thog med grags pa/ de'i sras rgya tsha ra mo/ de'i gcung rdo rje seng ge/ rgya pho ba lung pa ston pa yon tan grags/* […]

master at the turn of the 13th century and played a great role in the preservation of the rNgog teachings.

He figures in the lineage of the Combined Families, that is to say the maṇḍala of 49 deities of the *Vajrapañjaratantra*:[1185]

> Lineage of the Combined Families: mDo sde, Ram rDo rje grags, bKa' lung Snyan sgom, mNga' ris pa Byang tshul, rGya pho ba lung pa, to both rGyal po dga' and Seng ge sgra.

This lineage is reiterated in many sources, but it is worth examining. In the *Rosaries*, bKa' lung Snyan sgom and mNga' ris pa Byang tshul are said to be Ra mo's disciples. In this *Pañjara* lineage, however, the three are related in a relationship of successive masters and disciples, while Ra mo is omitted from the lineage and replaced by Ram rDo rje grags. As described above, Ram rDo rje grags from Klu gong was a descendant of the Ram family, and the son or nephew of rNgog Chos rdor's disciple Ram rTsan can. Not much is known about Ram's network, but he figures in another *Pañjara* lineage reaching Bu ston and Ngor chen Kun dga' bzang po.[1186]

The identity of bKa' lung Snyan sgom and mNga' ris pa Byang tshul is mostly unknown. The latter may be sNar thang pa Byang chub tshul khrims, also called mNga' ris dgra bcom Byang chub tshul khrims (TBRC P3994), although the link with the Ram, rNgog or rGya families is unclear; that master is mainly remembered for medical transmissions. He may also be Rin chen gling pa Tshul khrims mdzes (TBRC P0RK308), from whom rGya received Mar pa's tradition of *Guhyasamāja*,[1187] who is called mNga' ris pa Tshul mdzes in the DK-DZO.

However that may be, the lineage is difficult to account for, and it cannot be ruled out that there was a mistake in the compilation of ST1, repeated in the later versions that relied on it. It is especially doubtful that Ra mo's three disciples appear successively in the lineage while he does not. It is obvious that Ra mo received the *Vajrapañjara* (as other rNgog teachings) from his grandfather, and it is similarly likely that he gave it to his nephew Kun dga' rdo rje. The fact that he received and transmitted it of course does not necessarily mean that he figures in the lineage, but I would argue that the rNgog pa lineage of *Vajrapañjara* should be emended as follows:

> […] mDo sde, Ra mo, to the three bKa' lung Snyan sgom, mNga' ris pa Byang tshul and rGya pho ba lung pa, and he (them?) to both rGyal po dga' and Seng ge sgra […]

[1185] ST1, 8.4; ST2, 33.3. Also in *Gong dkar gsan yig*, 414; DL5 *thob yig*, 193b; KGNDZdkar chag, 23.2.

[1186] *Ngor chen thob yig*, 320: […] *rngog chos kyi rdo rje, sras mdo sde, ram klu gong pa, gror bsam phug pa, mnga' ris kyi ston pa dkon mchog 'bar* […]. See section II.3.2.5. He is mDo sde's disciple and Gror bsam phug pa's master.

[1187] KGNDdkar chag, 33.5-6; DK-DZO, 63: 164.

In this case, Ra mo, and not Ram, received the transmission from his grandfather, and gave it to three of his students (whose trace is largely lost). One of them, rGya Pho ba lung pa, was a major master of 13th-century Central Tibet, and gave that transmission back to rNgog scions a generation later.

rTsags Yon tan seng ge

Ra mo's second important disciple was Yon tan seng ge from the rTsags family. His uncle, rTsags *bande* Darma rgyal po, was mDo sde's close disciple. Yon tan seng ge continued the familial tradition of studying tantric transmissions with members of the rNgog family and became an expert in the *Catuṣpīṭha* Yogāmbara lineage. He appears in the lineages of that deity received by Ngor chen and the Fifth Dalai Lama, albeit under an alias.[1188] Tshar chen calls him Guhyasiṃha and the fifth Dalai Lama Mudrasidha, while recognizing that the name is unclear in his sources. In all likelihood, this is a wrong reading of Yon tan seng ge's sanskritized name, Guṇasimḥa.

rDog jo sras Nyi ma

The identity of this purported disciple of Ra mo is unclear. As the name "rDog" is used in the *Rosaries* to refer to the masters of the *Guhyasamāja* lineage coming from 'Gos Khug pa lHas bstas, we may infer that the "noble rDog Nyi ma" belonged to that family, and was more specifically rDog Nyi ma senge, alias rDog Mu ni. The timeframe of the rDog masters is rather unsettled, as is their relationship, if any, with the rNgog masters from gZhung. As explained above, Thogs med grags (1108-1154) studied *Guhyasamāja* with a rDog Mun pa can, who, I surmise, may be rDog Mu ni/Nyi ma seng ge (1100?-1160?).[1189] As a family expert of *Guhyasamāja*, Mu ni was not necessarily old when he taught Thogs med grags, but it would seem strange that he also studied later with Thogs med grags's son, Ra mo (1134-1170). It is not completely impossible as Ra mo was also considered the recipient of a family lineage, but given Mu ni's age, it would have been more logical for him to study with mDo sde.

rDog Mu ni's son was called rDog 'Phags pa skyabs, alias rDog Āryadeva, and was Ra mo's contemporary. rDog Āryadeva's master was his father's disciple, Glan rtsang tsha Nyi ma lcam, thus not from the rDog clan (i.e. not rDog Nyi ma). Āryadeva had three sons, none with the name Nyi ma. The elder was Nam mkha' grags, who gave birth to rDog Chos kyi dbang phyug.[1190] Hence, all in all, I have no clue who this noble rDog Nyi ma may be, and he may well be related to a completely different family than the *Guhyasamāja* rDog, especially as the *Guhyasamāja* transmission is not mentioned specifically.

[1188] *Ngor chen thob yig*, 326; DL5 *thob yig*, 4: 632.

[1189] See part II.2.2. for my estimate of the rDog masters' dates of birth and death.

[1190] See Nam mkha' bsod nams: *rDog rabs gsal ba'i me long*, mainly pp. 22-24.

3.3.3. rGyal tsha rDor seng (1140-1207)

> [Ra mo's] younger brother is rGyal tsha rDor seng. He was born in 1140 (iron male monkey). His father Jo thog died when he was in his fifth year, so he then received almost all of the rNgog teaching cycles from his grandfather, the great lama [rNgog mDo sde]. In his fifteenth year, his great forefather died. Then, he received all remaining teachings, without any missing, from his older brother, Ra mo. When he was in his 31st year, he accomplished perfectly the funeral rites after the passing of his elder brother, and took up the seat.[1191]

Thogs med grags, mDo sde's second child and the one seen as his true heir, had two sons. The first, Ra mo, took up the seat after his father and his grandfather died, when he was respectively sixteen and twenty. The second son, rGyal tsha rDo seng—short for rDo rje seng ge of the rGyal tsha branch of the rNgog—was 6 years younger than Ra mo, but he too received almost all rNgog pa transmissions from his grandfather, mDo sde, and after that from his brother.

Unlike his brother and father, who both died at 36, rDor seng had a long life. Sources differ on whether or not he held the seat of Ri bo khyung lding during the last decades of the 12th century. The *lHo rong chos 'byung* states that he did, but the *Deb ther dmar po* considers that it was not Dor seng but his half-brother, Kun dga' rdo rje, who took up the abbacy.[1192] The *mKhas pa'i dga' ston* adds that when the heritage was shared, Kun dga' rdo rje received Mar pa's relics and Ra mo's three sons the Ri bo khyung lding estate.[1193] It is difficult to establish clearly when this happened. My impression is that rDor seng may have shared the estate with his brother Ra mo, and took over the main responsibility when Ra mo died.[1194] Kun dga' rdo rje, being from a different father, did not share the estate. He had his own wife (Zhig mo) and children (the first, Rin chen rgyal po, was born in 1181), and probably set up his own house quite early. It is possible that he displayed such spiritual qualities that when rDor seng died in 1207, he inherited Mar pa's relics. At that point, he founded the sPre'u zhing monastery, which remained the main rNgog religious seat for centuries to come.

rDor seng was an important conveyor of the rNgog teachings in the late 12th century, as evidenced in several biographies of his contemporaries. Zhang Nyi ma 'bum (1158-1213), the son of the important rDzogs chen master Zhang ston bKra shis rdo rje (1097-1213),[1195] met rDor seng when he came to gZhung in 1177.[1196] gTsang pa rGya ras (1161-1211) also came to gZhung in the late 12th century, where he received several of the rNgog maṇḍalas. He is said

---

[1191] *lHo rong chos 'byung*, 57-58. The *Rosaries* do not contain one specific passage about rDor seng; the information is spread throughout the text. The *lHo rong chos 'byung* compiled these data, while adding some of its own so I translate it here for simplicity's sake.

[1192] *Deb dmar*, 77: *rdor seng gis gdan sa ma mdzad/ gcen jo tshul gyi sras bla ma kun dga' rdo rje'o.*

[1193] *mKhas pa'i dga' ston*, 779

[1194] See a reflexion on how the descent may have happened above in section I.3.

[1195] See Achard 2012.

[1196] See *rNying ma bka' ma rgyas pa*, 46: 363. See also http: //treasuryoflives.org/biographies/view/Nyima-Bum/8912, accessed on 27/01/2016.

to have met the "rNgog brothers," that is to say rDor seng and Kun dga' rdo rje.[1197] rDor seng figures in his lineage of merging and transference.[1198]

Compositions and students

> Master rGyal tsha rDor seng composed the maṇḍala rituals for [*Hevajra*] nine-deity, [*Nairātmyā*] fifteen-deity and *Mahāmāyā*, together with three generation-phase *sādhana*s and commentaries. He composed the ritual of blessing of the fifteen deities.[1199]

An indication of the importance of rDor seng in gZhung is that he authored several manuals, is recorded to have disciples and appears in several transmission lineages. As regards compositions, only two of rDor seng's works are preserved in the NKSB, namely the initiation rituals for the nine-deity *Hevajra* maṇḍala[1200] and for *Mahāmāyā*.[1201] The two are among a few works absent from the NKCK and were probably found by dPal brtsegs between the editorial work for the NKCK and NKSB, together with several works by rNgog Rin chen dpal bzang po.[1202] It is therefore likely that Rin chen dpal bzang po expanded his distant uncle's work, as he too authored *sādhana*s on *Hevajra* and *Mahāmāyā*.[1203] In volume 11 of the NKSB, the two initiation rituals are said to be composed by "badzra siddha" and "badzra siṃha." In the absence of the manuscript version, I can only suppose that "badzra siddha" should be read "badzra siṃha," that is to say rDo rje seng ge.

> The disciples of Master rGyal tsha rDor seng were Dran ston mtha' bral, the *brothers* rNgo tsha dKon mchog dpal and **Grags pa dpal**, Bla ma La drug pa and Bla ma rTag chen pa.[1204]

None of the disciples listed in the *Rosaries* are very famous, unlike gTsang pa rgya ras and Zhang ston Nyi ma 'bum, whose relationship with rDor seng is only mentioned in their biographies but not in the *Rosaries*. The diversity of these disciples, however, shows that gZhung remained an important hub for tantric teachings even after mDo sde's death.

The *lHo rong chos 'byung* adds an important disciple to that list, Master lCam me, who was rDor seng nephew and inherited from him the seat of Ri bo khyung lding.

[1197] See gTsang pa rgya ras's biography, e.g. *lHo rong chos 'byung*, 649: *slob dpon rngog mched gnyis las* […]; *Rwa lung dkar brgyud gser phreng* (W19222), 1: 394: 5: *rngog pa yab mched la* […]; *Pad dkar gsung 'bum*, 3: 23-24: *gzhung spre'u zhing du byon/ mchog gi don gzigs shing/ rgyud sde rgya mtsho'i pha rol son pa'i rdo rje 'dzin pa chen po rngog rin po che kun dga' dang/ rdo rje seng ge gnyis la* […].

[1198] *Pad dkar gsung 'bum*, 22: 14.

[1199] ST1, 21.5; ST2, 47.3

[1200] NKSB, *dPal kyai rdo rje'i dkyil 'khor gyi cho ga nyi ma 'bum gyi gzi brjid*, 11: 241-309.

[1201] NKSB, *sGyu 'phrul chen mo'i dkyil 'khor gyi cho ga*, 11: 134-187

[1202] Like Rin chen dpal bzang po's works, they may have been stored in the Potala. See Potala Catalog, 118-119.

[1203] NKSB, *dpal sgyu 'phrul chen mo'i sgrub thabs*, 11: 188-204; *dpal dgyes pa rdo rje'i mngon par rtogs pa*, 11: 208-240.

[1204] ST1, 23-24; ST2, 49.

Dran ston mtha' bral and rNgo (<sNgo) tsha dKon mchog dpal both figures in the lineage of the Catuṣpītha *maṇḍala* of Jñāneśvarī found in the KGND:[1205]

> […] rNgog Chos sku rdo rje/ rNgog Zhe sdang rdo rje/ rGyal tsha Ra mo/ rNgog (<sNgo) tsha Chos sku/ sNgo tsha dKon mchog dpal/ Dran ston mTha' bral/ Dran ston Shes rab bzang po […].

Although, in the KGND, sNgo tsha dKon mchog dpal is said to be Ra mo's disciple, the *Rosaries* state that he was rDor seng's student. He may have been both, as well as the disciple of his father (or uncle) sNgo tsha Chos sku. The KGND adds that dKon mchog dpal's disciple was Dran ston mtha' bral. The *Rosaries* for their part consider Dran ston mtha' bral to be rDor seng's disciple. It is possible that Dran ston mtha' bral and sNgo tsha dKon mchog dpal were brother (as suggested by ST1) and both studied with rDor seng as well as from each other.

rDor seng also figures in two *Vajrapañjara* lineages in Bu ston's record of teachings received.[1206] In them, he is the master of one Yo lcags jo mdo, himself said to be rTsangs sMra seng's master. The latter may be gTsang ston sMra ba'i seng ge, alias lCe ston mDo sde seng ge.[1207] That master from the lCe clan met mDo sde in his old age, and, later on, the lCe clan invited rDor seng to their seat in gTsang, Sri'u gcung. There, rDor seng taught *Nairātmyā*, *Black Jambhala* and *Dud sol ma*.[1208] It is possible that at that time, older and younger lamas of Sri'u gcung received rDor seng's transmission, which may explain some shuffling in the order of the lineages.

Finally, rDor seng also appears within the lineage of a *Catuṣpīṭha* text in the NKSB composed by one bSod nams rgyal po in 1317,[1209] where he is said to be Jo thog's disciple and rGya pho ba lung pa's master. As far as the latter is concerned, it is recorded in his biographies that as a child he studied *Nāmasaṃgīti* and *Vajrapañjara* with Jo thog.[1210] Later, he studied with rNgog rGyal tsha rDor seng, and still later taught rNgog rGyal po dga' (1193-1272) and Seng ge sgra (1211-1284).[1211]

3.3.4. Later rGyal tsha masters

> From rGyal tsha Ra mo's wedding with his wife Shi sha dur ma, three children were born. [The first] was Master lCam me, who was born in 1154 (fire male

---

[1205] KGNDdkar chag, 32. See also *Gong dkar gsan yig*, 414: […] *chos rdor/ mdo sde/ rgyal tsha ra lo [sic]/ sngo tsha chos sku/ sngo tsha dkon mchog dpal/ dran ston mtha' bral/ dran ston shes rab/ man lungs gu ru/ man lungs kun mkhyen/ 'dzam gling pa sangs rin/ rig pa 'dzin pa tshul mgon/ rin po che byang chub dpal/ des bdag la'o*. Another lineage of Catuṣpītha transiting by sNgo tsha Chos sku figures in Bu ston *gSan yig*, 74.

[1206] Bu ston *gSan yig*, 109.2-3: *rngog mdo sde rgyal mtshan/ lha steng pa/ rngog rgyal tsha rdor seng/ yo lcags jo mdo.* 110.6: *rngog mdo sde/ rngog rgyal tsha/ yo lcags jo mdo/ rtsangs smra seng.*

[1207] See his biography in NKSB, 23: 256-269 and above in the part on mDo sde's disciples.

[1208] NKSB, 23: 259.

[1209] The text is called *gDan bzhi pa'i nges don*. NKSB, 9: 241-270. Colophon p. 270. The same lineage is recorded in a *Catuṣpīṭha sādhana* received by Gong dkar ba Kun dga' rnam rgyal, *gSan yig*, 289.

[1210] DK-DZO, 61: 163; *lHo rong chos 'byung*, 155.

[1211] See above in the part of Jo thog's disciples.

> dog), just when his ancestor, the great lama, died. He learned most of the rNgog teachings from his father [but] his father died when he was in his seventeenth year. Having correctly accomplished the funeral ceremonies for him, he received completely from his uncle rDo rje seng ge all remaining teachings without exception. In his fifty-fourth year, 1154 (hare), he made extensive funeral ceremonies after the passing of lama rDor seng and invested the seat. His younger brothers were Jo shag and Jo bsod. The son of master lCam me was master Nam mkha' dbang phyug. His sons were master Kun dga' and dBang phyug 'bum. The son of master Kun dga' was master Rin chen rgyal po. He had three sons: master Rin chen dpal, master Grags pa rgyal mtshan and master Kun dga' blo gros. The latter's son was Kun dga' bzang po. **He had five sons: lama Ras pa, lama dPal 'byor pa, mKhan chen dKon mchog bkra shis, master dPal ldan bzang po and Dharma Lord bSod nams don grub. They had three sons: master lHa dbang bzang po, master rDo rje bkra shis and master Rin chen dbang phyug. His (their?) son was lama bSod nams dpal dbyangs.** They are known for having been of great service for the doctrine and having displayed a wide activity. They held the exegetical traditions of the Dharma and maintained until now the continuity of the family line.[1212]

Just like for rDor seng, the account of the *lHo rong chos 'byung* is more detailed with regards to the rGyal tsha branch than the *Rosaries*. Additionaly, there is roughly one line and a half missing from the computerized version, which has been supplemented here with the *dbu med* manuscript version of the *lHo rong chos 'byung*. Although Tshe dbang rgyal does not add much information to the *Rosaries*, he emphasizes that the rGyal tsha branch of Ri bo khyung lding continued to transmit the rNgog traditions for generations, as well as continued the "bone-line" (*gdung brgyud*). The account of the line ends with Kun dga' bzang po, at the same point than ST3 (and ST1), which indicates than ST2 was not one of the *lHo rong chos 'byung*'s sources.

Despite this general appreciation of the rGyal tsha line as a whole and the fact that many of them are called "masters" (*slob dpon*)—which indicates their responsibility as lay heads of the family—it seems that Ra mo and rDor seng, Thogs med grags's sons, were the last important spiritual masters of that branch, which is symbolically explained in the *mKhas pa'i dga' ston*

[1212] ST1, 7.1-2; ST2, 32: 2-3 (**bold**); *lHo rong chos 'byung*, 58-59; *lHo rong chos 'byung dbu med*, 0070 (underlined): *rgyal tsha ra mo yum shi sha dar ma bzhes pa la/ sras gsum 'khrungs pa'i slob dpon lcam me ni/ myes bla ma chen po gshegs pa dang dus 'dzoms pas/ shing pho phyi'i lo la sku 'khrungs/ yab la rngog pa'i chos skor phal cher ba gsen/ dgong lo bcu bdun pa'i steng du yab 'das/ de'i gshegs rdzong[s] legs par grub nas/ dgung lo nga bzhi yos la bla ma rdor seng gshegs pa'i gshegs rdzongs rnams rgya chen po mdzad nas gdan sa la bzhugs/ gcung jo shag/ jo bsod dang gsum/ slob dpon lcam mo(<e)'i sras slob dpon nam mkha' dbang phyug/ de'i sras slob dpon kun dga'/ dbang phyug 'bum gnyis/ slob dpon kun dga'i sras slob dpon rin chen rgyal po/ de la sras gsum/ slob dpon rin chen dpal/ slob dpon grags pa rgyal mtshan/ slob dpon kun dga' blo gros/ de'i sras kun dga' bzang po'o/* ***de la sras lnga byon pa/ bla ma ras pa/ bla ma dpal 'byor ba/ mkhan chen dkon mchog bkra shis/ slob dpon dpal ldan bzang po/ chos rje bsod nams don grub pa/ de rnams la sras gsum/ slob dpon lha dbang bzang po/ slob dpon rdo rje bkra shis/ slob dpon rin chen dbang phyug/ de'i sras bla ma bsod rnams dpal dbyangs/*** *bstan pa'i zhabs tog dang 'phrin las rgya chen po byung nas/ chos kyi bshad srol 'dzin pa dang/ gdung rgyud kyi rim pa da lta'i bar du bzhugs zhes grags so/*

by the fact that their heirs kept the house rather than Mar pa's relics, hence were supplanted by the gTsang tsha branch as spiritual leaders of the rNgog pa teaching.

Ra mo had three sons with his wife Shi sha dur ma,[1213] lCam me, Jo shag and Jo bsod. lCam me was born in 1154, the year mDo sde died. He received the rNgog maṇḍalas from his father and, after the latter's death when he was sixteen, from his uncle. He must have been considered the most prominent master in gZhung as he was the one who led the funeral ceremonies of Ra mo and rDor seng. Despite his importance, he only invested the seat of Ri bo khyung lding after his uncle's death in 1207. As stated earlier, this could be explained by the Tibetan tradition of brothers sharing the family estate, a tradition which perhaps prevailed in Ri bo khyung lding during the following generations as well. The genealogic tree (in ST1 and ST2) indeed generally gives only one wife per generation, with children (only sons mentioned) considered the scion of the elder son. An exception to this is Dor rgyal and 'Bum lcam, who were respectively Jo shag and Jo bsod's sons and are only named in ST1. Nothing is known about their own progeny. If they had any children, they did not play any important role in the rNgog religious or familial life.

lCam me's son, Nam mkha' dbang phyug, inherited the estate, which was then passed on for several generations. Nam mkha' dbang phyug's grandson, Rin chen rgyal po, is credited with the composition of several manuals, like the *Inner Lines of the Vajramala[tantra]* as well as this tantra's empowerment.[1214] He was an active member of the rNgog pa religious lineage as ST1 states that he matured disciples all over Central Tibet and mDo khams, but not much else is known about him.

His elder son, Rin chen dpal, authored several texts associated with the *Hevajra* cycle as well as a collection of biographies, called *Bla ma'i rnam thar rnams*.[1215] As he was the master of dPal gyi rdo rje, the author of ST1, it is possible that these biographies were dPal gyi rdo rje's main source for the composition of ST1. Despite Rin chen dpal's importance for the historiography of the clan, nothing particular is known about him.

Rin chen dpal had a son, Kun dga' bzang po, who in turn fathered five sons who were younger contemporaries of the sPre'u zhing's abbot gTsang tsha Byang chub dpal. Among them, rGyal tsha bSod nams don grub played an important spiritual role and revived that branch of the family (see chapter II.5 for details).

[1213] She is called Shi sha dar ma in the *lHo rong chos 'byung*, 58.

[1214] ST3, 85: *rdor phreng gi nang thig dang/ dbang gong ma mdzad do*.

[1215] ST1, 21: 8*;* ST2, 47: 6.

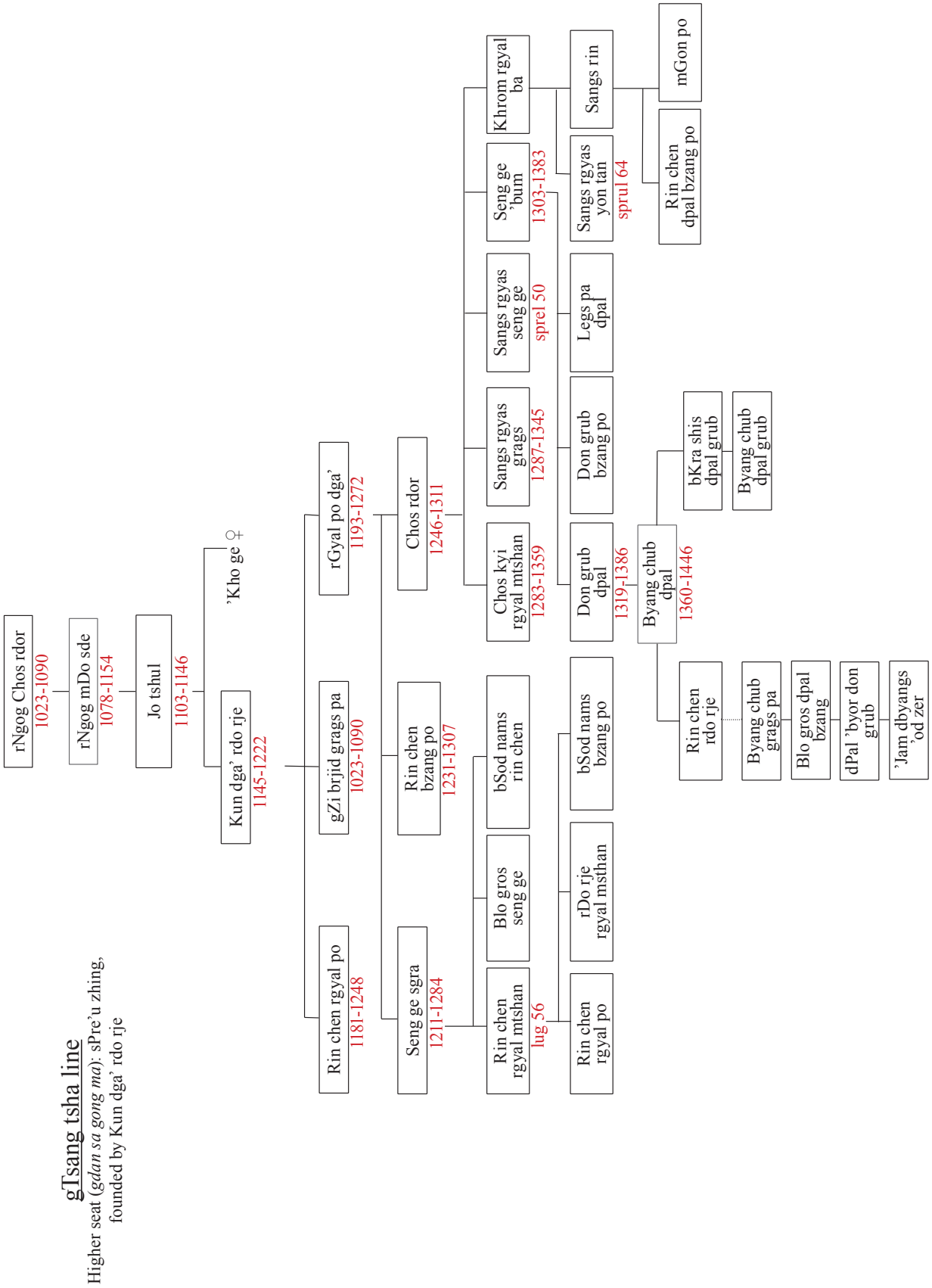

Plate 13: gTsang tsha line according to ST1, ST2, *'Phrin las rnam rgyal gsan yig*

3.4. gTsang tsha branch

3.4.1. rNgog Kun dga' rdo rje (1145-1222)

> When Kun dga' rdo rje was a young infant of seven months, his father died. At eight months, he could go back and forth in front of his mother. In his sixth year, he was able to recite the *Nāmasamgīti* from memory. He brought book-cases to the Dharma assemblies of his grandfather, the great lama, and covered texts with them. He received all dharma transmissions from Lama mDo sde. When he reached his tenth year, his grandfather died, and on that year master lCam me was born. Master Jo ra took over the rest of his education. In his thirteenth year, he taught the Dharma, and it is said that from then on, even though he knew that teaching, he would listen to every single session of Master Jo ra. With regards to texts, he did not rely on all of his father's old copies but carefully wrote the rNgog's Dharma cycles. It is said that he requested a lot from Lama lHo nag sMon lam khri, such as *Catuṣpīṭha*, *Saṃputa*, *Mañjuśrī*, etc.
>
> Before that, Mal nag had gone to Khams, and everyone had asked him: "Are you a student of the rNgog?" Thinking that he should request teachings from the rNgog, he came to dBus in front of the great lama […] and requested instructions. […]Lama Kun dga' came there in his presence and stayed three summers and winters, completely requesting all the instructions of the rNgog. Although he requested vows of pure conduct from him, [Mal nag pa] replied that it was not fitting (as he needed to spread his family line). He told him to depart, not granting him [the vows]. ([So], in his twenty-seventh year, [Kun dga'] went to Khams) [16].
>
> He requested the empowerment of the fifteen goddesses from rTsags 'Khar rgyab pa. He received many key instructions on the long-life practice and so on from **mGos** Ri khrod dbang phyug. He requested Zhi byed from 'Chus pa Dar brtson. He received Vajravidāraṇa from the siddha Shol po ba. He received Vajrapāṇi Covered in Iron (*lcags sbubs ma*) from the glorious rGa lo, and the Pañcakrama from master Mi nyag. It is also said that he received many instructions from several other masters. **(Having gone to mDo khams, thanks to his realization in the rNgog pa fields of knowledge, he provided [disciples] with great offerings and service. He was thus the first hierarch of the rNgog to go to mDo khams).**[1216]

rNgog gTsang tsha Kun dga' rdo rje was the son of Jo tshul, mDo sde's illegimate elder son with a consort from gTsang (hence the name gTsang tsha, also sometimes spelled rTsang tsha,

---

[1216] ST1, 15.1-16.2; ST2, 40.6-41.9. *lHo rong chos 'byung*, 59-60 (*dbu med*, 0070-0072); BA, 409 (*Deb sngon*, 494), *Deb dmar*, 77 and *mKhas pa'i dga' ston*, 779. See above in the part on mDo sde's disciple for Mal nag's lifestory.

and erroneously gTsan tsha). Although Jo tshul spent most of his life away from gZhung, he was there in the end of his life, where he may have settled with his wife, Dar mdzes. They had two children, first a daughter, ’Kho ge, and then a son, Kun dga’ rdo rje. Kun dga’ rdo rje was born in late 1145, and his father died seven months later, in 1146.

According to the *Rosaries*, Kun dga’ rdo rje was a very precocious and gifted child. He could walk at eight months, and knew the *Nāmasaṃgīti* by heart at five (admittedly like most of the rNgog children, and Tibetan monks at large). Like mDo sde before him (who was climbing on his father’s shoulders while Mar pa was giving empowerments), Kun dga’ attended his grandfather’s teachings sessions from a very young age, his own game being to cover books in cloth. Despite mDo sde’s passing when Kun dga’ was only nine, he received most of the rNgog maṇḍalas from his grandfather, and the main rNgog spiritual lineage thus goes directly from mDo sde to him, although he received the transmissions again from his uncle Ra mo.

Given his somewhat outsider position, Kun dga’ must have been a very perseverant and talented master, which insured his final position as mDo sde’s main heir in the lineage. The *Rosaries* insist on the fact that he attended every single teaching of his uncle Ra mo although he knew it already, and copied again all the manuals for the rNgog transmissions, although he had inherited some from his father.

On top of receiving the rNgog maṇḍalas from his grandfather and uncle, he also received them again from mDo sde’s disciples. The first is called Lama lHo nag sMon lam khri in the *Rosaries*. As Kun dga’ received from him the tantras of *Catuṣpīṭha*, *Saṃputa*, *Nāmasaṃgīti* and others—i.e. rNgog pa transmissions—that master was probably mDo sde’s disciple called lHo nag pa, mentioned in all sources without any detail. The *Deb ther dmar po* and *Deb ther sngon po* call him lHo nag la/ra mo’i mTshe’u dar re and may associate him with Tshe’u *bande* Dar re. As mentioned above,[1217] Tshe’u bande wrote a *Hevajra* commentary within the rNgog tradition, but his relationship with mDo sde is not firmly established. As nothing more is known about lHo nag pa or Tshe’u Dar re, it is difficult to reach any conclusion, other than the fact that this master came from the lHo nag region, in the lHo rong district.

Kun dga’ rdo rje’s main master was Mal nag pa, a hermit considered to be the one who had received the most rNgog transmissions (see section II.3.2.5). Kun dga’ rdo rje spent three years in his very secluded mountain retreat, from approximately 1168 to 1171. He wanted to settle there and receive monastic ordination from Mal nag pa, but the hermit declined, arguing that Kun dga’ had to perpetuate his bloodline, just like Ra mo before him was refused the vows by sGam po pa, for the same reason. Kun dga’ rdo rje left the hermitage of Mal nag pa when he was 26 and went to Khams. He was perhaps prompted by the yogi who had himself heard of the rNgog while he was in Eastern Tibet and had travelled to Central Tibet in order to meet mDo sde. The number of years that the young gTsang tsha rNgog spent in Khams is not specified, but it may have been a long period of time, as he had the occasion to attract many disciples from all around Khams (Ri bo che and the Nang chen monasteries of rTa sna

[1217] See section II.3.2.6 in the part on mDo sde.

and Shor dgon are especially mentioned).[1218] Among his disciples was ’Gro mgon Yel pa Ye shes brtsegs (1134-1194), a former student of his grandfather mDo sde and founder of rTa rna mgon,[1219] as well as lHo pa dkar mo and rGya sgom Ye shes ’od, one of the third Karma pa’s teachers.[1220] Sho dgon (<Shor dgon) is the monastery founded by sMar pa Shes rab ye shes,[1221] who had himself been the disciple of rNgog mDo sde before he met Phag mo gru pa. Kun dga’ rdo rje may have returned to gZhung in the late 1170s as his first son, Rin chen rgyal po, was born in 1181.

In Khams, he met a Bla ma Mi nyag. No details are provided, but he was probably a Tangut, as the kingdom was then at its height. As seen above, one of mDo sde’s disciple, Cog ro Chos kyi rgyal mtshan (1108-1176), played a great role in the spread of the rNgog pa teaching there, and it is easy to imagine that Kun dga’ rdo rje was welcome in that powerful kingdom that was so keen on tantric teachings.[1222]

Two of his other teachers are well-known. First, he received the Zhi byed precepts from ’Chus pa Dar ma brtson ’grus (1117-1192), an important master in that lineage.[1223] He also studied under rGa Lo tsā ba gZhon nu dpal, from whom he received a special transmission of *Vajrapāṇi*.[1224] He additionally attended masters about whom nothing is known, such as mGos (or Ghos) Ri khrod dbang phyug, from whom he received the long-life practice of *Amitāyus*, and the siddha Shol po ba, who gave him the purification practice of *Vajravidāraṇa*.

Foundation of sPre’u zhing

The most significant event in Kun dga’ rdo rje’s life is his foundation of the sPre’u zhing monastery, which became the main seat of the rNgog lineage in the following centuries. Strangely enough, no detail on the matter is provided in the *Rosaries*, and the name of the monastery is never mentioned either.

The two *Rosaries* have a strange sentence, to the effect that he “requested the empowerment of the Fifteen Goddesses from rTsags ’khar rgyab pa” (*rtsags ’khar rgyab pa la lha mo bcwo*

[1218] ST1, 24: 1: *rta rna dang/ shor dgon/ re bo che las sogs pa mdo khaṁs stod smad thams cad/ bla ma kun dga’i slob mar gda’o/ lHo rong chos ’byung*, 60: *slob ma yang lho pa dkar mo/ rgya sgom ye shes ’od/ ’gro mgon yel pa/ dang rta rna/ sho dgon sogs…*

[1219] See *lHo rong chos ’byung*, 824-831. See also his short biography by Dan Martin: http://treasuryoflives.org/biographies/view/Yelpa-Yeshe-Tsek/7636, accessed on 2016/03/01.

[1220] See *Rosary of Cristal Gems*, 1: 290. Karma pa Rang byung rdo rje studied *Hevajra* from him.

[1221] see above in the part on mDo sde’s disciples

[1222] This Lama Mi nyag is called Lama Nyi ma in ST2, and Kun dga’ receives the *Pañcakrama* (*rim lnga*) associated with the *Guhyasamājatantra* from him, so the link with the Tangut Kingdom is not definite. See Hou 2017 and section II.3.2.5.

[1223] See his biography in BA, 904-905; Cabezón 2013, 43-45, for his relationship wit Rog *bande* Shes rab ’od (1166-1244).

[1224] See Vitali 2010, 201-204, for a summary of his biography written by his disciple, Bla ma Zhang. Vitali estimates that rGa lo was born before 1105/1106 and died before 1193-1194. He was known for his transmission of *Kālacakra* and the associated practice of *sByor drug*. He spent many years in India, before returning to Central and Eastern Tibet.

lnga'i dbang zhus) right after his return from Khams. It is phrased differently in the *lHo rong chos 'byung*:[1225]

> In his twenty-fifth year, he went to Khams. He made great offerings and service with the rNgog fields [of knowledge], and then came back. Having built the gTsang House, he gave the empowerment of the Fifteen Goddesses.

rTsags 'khar rgyab may be a person, an offspring of rTsags Darma rgyal po about whom nothing is known; it is not impossible that Kun dga' rdo rje may have wanted to request the *Nairātmyā* empowerment from his grandfather's disciple. Another possibility is that, when Kun dga' rdo rje came back with the offerings he received during his teaching tour in Khams, he built a new house, the gTsang tsha House, where he settled with his family, as he did not have any space for his family in Ri bo khyung lding, which was then led by rGyal tsha rDor seng. As the rNgog lineage has an important link with *Nairātmyā* and as Chos rdor is said to have had a vision of her near the place where sPre'u zhing now stands, it is possible that a consecration of the place may be associated with the ritual of *Nairātmyā*.

In any case, the *Deb ther dmar po* states that he built the southern house of sPre zhing and created the seat.[1226] The *mKhas pa'i dga' ston* provides more detail.[1227] According to dPa' bo gTsug lag phreng ba, some time after Kun dga' came back from Khams, presumably at the death of rDor seng, the rNgog estate was shared between Ra mo (and rDor seng)'s three sons on the one side, and Kun dga' rdo rje on the other. The land, house and possession went to the rGyal tsha brothers, and Mar pa's reliquary, together with other holy objects, were Kun dga's share. In the valley, there was a land-holder called sPre'u. He asked Kun dga' to build a house over his field, and this is how Kun dga's house became known as "sPreu's Field" (*spre'u zhing*). Thanks to the presence of Mar pa's relics, it became the main seat of the rNgog, and Kun dga's son, gZi brjid grags pa (1190-1269), became the next lineage and seat holder. gZi brjid grags pa was the first monk in the family and may be the one who turned sPre'u zhing (which was until then a residence, *gzims khang*) into a monastery.

Writings

Bla ma Kun dga' authored red notes on the *Two Segments*.[1228]

There is only one text by Kun dga' rdo rje in the NKSB, a *sādhana* on Hevajra with one face. According to the *Rosaries*, he also compiled "red notes" (*dmar mchan*). This may refer to notes in red ink that he added to his grandfather's commentary on the *Two Segments*, the *Likeness of the Jewel Ornaments* (*Rin po che'i rgyan 'dra*). The version of the text preserved in the NKCK (2: 3-169) indeed bear a substantial number of notes in the first part, but without

---

[1225] *lHo rong chos 'byung*, 59: *dgung lo nyi shu rtsa lnga la khams su byon/ rngog pa'i gdul bya thams cad kyis 'bul ba zhabs tog chen po byas nas slar yang yar byon/ gtsang mkhar rgyab pa las lha mo bco lnga'i dbang dang*. In the *dbu med* version, 71, the last phrase reads *rtsang mkhar rgyab pa la lha mo bco lnga'i dbang gnang*.

[1226] *Deb dmar*, 77: *spre zhing gi gzims khang lho ma btab*.

[1227] *mKhas pa'i dga' ston*, 779.

[1228] ST1, 21.5; ST2, 47.3.

an access to the original manuscript, it is difficult to assess whether they are written in red. In any case, the manuscript is only one of several mentioned in the DC, and unlikely to be the one written by Kun dga' rdo rje; it is not impossible, however, that the notes are his.

3.4.2. rNgog gZi bjid grags pa (1190-1269)

> Lam gZi brjid completely received all rNgog cyles from his father. In his twenty-fifth, he went to sTag tshang in Nyangs stod (in Mon 'gror) and was ordained by Ba phyar mKhan po (this is the stage before full ordination). He requested several instructions from 'Tshe mi Shākya dByang phyug, and received *Saṃputa* and *gSang ldan* from lCe ston Sangs rgyas 'bum. He received *gSang ldan* and *Saṃputa* from Master lHo skya (dKon mchog dpal), and the gCod cycles from Master mDo chen mo. From the Dharma Lord Lo ras pa he requested the Five Capabilities, the Seven Excellent [Interdependent Connections], the Chig chog ma and so on.[1229]

Kun dga' rdo rje had three sons with his wife Zhig mo. The first, Rin chen rgyal po, was born in 1181. Although he lived to the age of 67 and became a fully-ordained monk, nothing is known about him. His younger brother, gZi brjid grags pa (1190-1269), took the responsibility of sPre'u zhing after Kun dga' rdo rje's demise, and their younger sibling rGyal po dga' (1193-1272) shouldered the duty of continuing the family line.

gZi brjid grags pa is the first important rNgog master to be ordained. He received his vows from Ba char ba (also spelled Ba phyar ba) when he was 24 in Nyangs stod sTag tshang, a place in gTsang also called sMon 'gro. Ba char ba was the disciple of Bya 'dul 'dzin pa brTson 'grus 'bar (ca. 1100-1174), founder of a seminary in Zul phu Monastery, as well as an early bKa' gdams master and holder of a *Vinaya* lineage that came from Klu mes.[1230]

gZi brjid grags pa mainly studied with his father, from whom he received all the rNgog transmissions. Additionally, he received *Saṃputa* and *gSang ldan* from Lo skya dKon mchog dpal (Ratnaśrī in ST3) and lCe ston Sangs rgyas 'bum. The former may be a distant disciple of Lo skya Shes rab brtsegs, who is known for his transmission of *gSang ldan* and had ties with rNgog Chos rdor. The latter may descend from lCe ston sMra seng, who figured among rNgog mDo sde's disciples and also studied with rNgog rGyal tsha rDor seng.[1231] gZi brjid grags pa also attended rGya Pho ba lung pa, who had received the rNgog teachings from Ra mo and rDor seng before returning them to gZi brjid gras pa, his brother rGyal po dga' and the latter's son Seng ge sgra.[1232]

[1229] ST1, 16.2-3; ST2, 41.7-8: 1. Are also used for this part: ST3, 86; *Deb sngon*, 494 (BA, 409); *lHo rong chos 'byung*, 60; *Deb dmar*, 77; *mKhas pa'i dga' ston*, 779.

[1230] BA, 80. See Sørensen and Hazod 2007, 2: 695 for a short biography.

[1231] See II.3.2.5. and NKSB, 23: 283.

[1232] See II.3.4.5.

gZi brjid grags pa studied under several other masters. The most famous was Lo ras pa dBang phyug brtson ’grus (1187-1250), one of gTsang pa rgya ras’ (1161-1211) main disciples, from whom he received various sets of instructions typical of his Lower ’Brug pa (*smad ’brug*) school. Mentioned in particular are the Five Capabilities (*thub pa lnga*),[1233] which are esoteric practices associated with the perfection phase, as well as the Seven Excellent Interdependent Connections ([r*ten’brel*] *rab bdun ma*), and the Chig chog ma (or *Tshig chag ma* in ST2*)*.

He also attended less well-known masters, such as sLob dpon mDo chen mo, from whom he received gCod cycles.[1234] The identity of this master is unclear. If we are to believe the *Deb ther sngon po*, he is called sGrol sgom mDo chen pa, which may refer to Grol sgom Chos g.yung (1103-1199), sGam po pa’s disciple. Given the lack of precision in the *Rosaries* and the fact that Chos g.yung died when gZi brjid was nine, this seems unlikely.

gZi brjid grags pa enlarged sPre’u zhing with a “northern mansion” (*gzims khang byang ma*), as opposed to the southern one built by Kun dga’ rdo rje.[1235] He also erected a temple, into which the stūpa containing Mar pa’s relics was enshrined. The *Rosaries* do not elaborate on the names of his main students, although he is said to have had many, foremost among which are gZi brjid’s nephews, Seng ge sgra (1223-1296) and Rin chen bzang po (1231-1307), who continued the lineage after him. The *lHo rong chos ’byung* also mentions someone called Sa phug pa Shag rdor.[1236]

All in all, gZi brjid grags pa seems to have been a solid link in the rNgog transmission chain and a good administrator of the newly founded sPre’u zhing. He and his brothers had a long life; they enlarged the seat while maintaining its tantric traditions and were successful in passing on the teaching and land to the next generation, without being credited with the writing of any manuals.

3.4.3. rNgog rGyal po dga’ (1193-1272)

> **(His younger brother)** Master rGyal po dga’ completely received the rNgog cycles from his father. From Master Lo skya, he requested all *Cakrasaṃvara* cycles according to Mar pa do pa’s tradition, the *Vajrabhairava* cycle according to sKyo’s tradition, as well as the *Later Saṃpuṭatantra*. From rGya Pho ba lung pa, he received empowerments on the Combined Families of *Pañjara* as well as

---

[1233] See Dan Martin http: //www.tibetan-museum-society.org/java/arts-culture-lo-ras-pa.jsp.The Five Capabilities are 1. Being capable of [facing] death: Mahāmudrā (*Phyag rgya chen po ’chi thub*); 2. Being capable of psychic heat (*gtum mo ras thub*); 3. Being capable of the tantric activities done in seclusion (*gsang spyod kyi ri thub*); 4. Being capable of [facing] the disturbances by *’don* spirits: sickness (*nad ’don gyi ’khrug thub*); 5. Being capable of [facing] circumstances: antidotes (*gnyen po rkyen thub pa*).

[1234] ST2 and ST3 speak of *spyod skor rnams*.

[1235] *Deb dmar*, 33b-33a.

[1236] KGNDdkar chag, 41, states that the lineage of the initiation of Dud sol ma passes from gZi brjid grags pa to Drung rma se Blo gros rin chen (1386-1423), founder of the Zur mang rNam rgyal rtse Monastery in Khams. Further study is necessary to clarify the lineage, but there cannot be a direct link between these two masters as they were not contemporary.

> the *Vajrabhairava* empowerment according to sKyo's tradition. From Lama mKhas chen pa, he received the *dug dbang* of Maheśvara. It is said that Master Jo gsal learned medicine.[1237]

rGyal po dga' was only three years younger than gZi brjid grags pa and received approximately the same education. They may have had a fourth brother, named Jo gsal, who became a physician, but nothing more is known about him.

Although rGyal po dga' shouldered the duty of continuing the family line by marrying and having children, he held much of the rNgog teachings and played an important role in their transmission among his sons, and probably also other students. It was his elder brother, the monk gZi brjid grags pa, who held the seat, but rGyal po dga' is provided his own albeit short biography in the two *Rosaries* and in the *lHo rong chos 'byung*, a sign that he was a significative master in the lineage.

rGyal po dga's wife was known as sTan ba skyid (or brTan ma skyid) and they had three children. Until that point, the dates of the *lHo rong chos 'byung* seemed to be more correct than those in the *Deb ther sngon po*, but the reverse holds true for the dates of birth of rGyal po dga's children. The elder, Seng ge sgra, was in all likelihood born in 1235, and his younger brother, Rin chen bzang po, in 1243. The youngest, Chos rdor, was born in 1246, a date on which both sources agree. Thus, rGyal po dga' married quite late and had his children between the age of 42 and 53, which can be explained by the fact that he devoted most of his early life to mastering the rNgog legacy and enriching it with outer teachings.

Like gZi brjid grags pa, rGyal po dga' received all the rNgog maṇḍalas from his father. He also received them from rGya pho ba lung pa, especially *Pañjara*, which rGya had received from rNgog rGyal tsha Ra mo and for which he was a lineage holder. From rGya, he also requested sKyo 'Od 'byung's tradition of *Vajrabhairava*, which he doubled with the same transmission by Lo skya dKon mchog dpal, his brother's teacher.[1238] Lo skya also handed him *Cakrasaṃvara* according to Mar pa do pa's tradition and the *Later Saṃpuṭatantra*.[1239] From the unknown Lama mKhas chen pa, he received the "poison empowerments" (*dug dbang*) of Maheśvara (*dbang phyug chen po*), that is to say protective rituals against poisoning.

3.4.4. rNgog Rin chen bzang po (1245-1319)

> Born from an ocean of innumerable jewels;
> By way of an excellent conduct, from your complete liberation
> You appear, rNgog, without effort and spontaneously:

[1237] ST1, 16.4-5; ST2, 42.1-3. See also *Deb sngon*, 495 (BA, 409); *lHo rong chos 'byung*, 60-61.

[1238] This practice of *Vajrabhairava* with nine or seventeen deities was introduced in Tibet by sKyo 'Od 'byung. Cf "sKyo 'od 'byung nas brgyud pa'i dpal rdo rje 'jigs byed lha dgu 'am lha bcu bdun gyi dkyil 'khor." In *rGyud sde kun btus*, 10: 1-42.

[1239] This may be the *rGyud kyi rgyal po chen po dpal yang dag par sbyor ba'i thig le* (*Saṃpuṭa-tilaka tantra*, Toh 382). A commentary to that text by Sa chen is called *dPal yang dag par sbyor ba'i rgyud phyi ma'i rnam par bshad pa*.

I prostrate to the feet of Excellent Jewel [Rin chen bzang po]![1240]

The biography of rNgog Rin chen bzang po is quite long, albeit its length results mainly from the listing of his masters and transmissions. Despite his apparent importance in the *Rosaries*, there is relatively little detail on his lifestory proper, which may be explained by the fact that there was an autonomous hagiography of him, today unavailable. The above verse of homage, the only one found in any of the *Rosaries* or histories of the rNgog, may be derived from that hagiography. In the rest of this chapter, information on the transmissions received are mostly in notes. No exhaustive effort has been made to identify these teachings as they did not play any significant role in the rNgog lineage.

Masters

Lama Rin chen bzang[1241] po received *all* of his family teachings from his uncle Lama gZi brjid. In his 12th year, he taught the *Two Segments*. From his twelfth to fourteenth year, he also taught *Pañjara*, *Mahāmāya*, *Mañjuśrī*, *Saṃpuṭa*, and so on. He requested from Lama gZi brjid and integrated within his mind the empowerments of the nine deities, the fifteen deities [of the *Hevajratantra*], *Catuṣpīṭha* and *Māya*, the blessings of Nāro and Maitri, the authorization-empowerment (*rjes gnang*) of the protector in union, cycles of practice, and all reading transmission, key instructions, etc. From his father [rGyal po dga'], he received teachings on the Combined Families of *Pañjara*, on *Cakrasaṃvara* according to Mar [pa] do [pa]'s tradition and on the body maṇḍalas from Ghaṇṭāpā's [tradition of Cakrasaṃvara]. [18]

From Lama bZang mo ba, he received the empowerment and teachings of *gSang ldan*. From Master Rin [chen] gzhon [nu], he requested all of Mar [pa] do [pa]'s cycles of *Cakrasaṃvara* and some Dharma cycles of sPar phu ba's tradition. From Master rDo rje rin chen, he requested the *Uttaratantraśāstra*, the *Bodhicāryavatāra*, the *Śikṣāsamuccaya*, the *Twenty Verses on the* [*Bodhisattva*] *Vows* and the *Pramāṇa Summary*. From the Upadhyāya Zul phu ba [Chos grags dpal],[1242] he requested the formulation of the vows (*sdom tshig*), *Remembering the Three Jewels* and the practice of the *Heart Sūtra*. From Master 'Od zer dpal, he requested the liturgical prayer of the Medicine Buddha and the seven-fold practices to generate [*bodhi*]*citta* from the lineage of the Kashmiri Mahapaṇḍita.

[1240] This verse of homage only features in ST2, 42.8. The part on Rin chen bzang po, unless otherwise mentioned, is based on the following sources: ST1, 17.6-18.5; ST2, 43; ST3, 87; *Deb sngon*, 495 (BA, 410-411); *lHo rong chos 'byung*, 61-62. The *Deb dmar*, 65, is an especially important source as Rin chen bzang po had close links with Tshal Gung thang and the Tshal Yang dgon Monastery of the author, the abbot Tshal pa Kun dga' rdo rje (1309-1364).

[1241] ST1, 17.6-18.2; ST2, 43.1-5.

[1242] Name given in the BA, 410.

Rin chen bzang po received all transmissions cumulated by his rNgog ancestors from his uncle, the seat-holder gZi brjid grags, and his father, rGyal po dga'. Like most rNgog masters, Rin chen bzang po is credited with an early mastery of the most important rNgog pa maṇḍalas, such as *Hevajra*, *Mahāmāyā*, *Nāmasaṃgīti* and *Saṃputa*. He received from his uncle the empowerments for all of these, together with the one of the *Catuṣpīṭhatantra*, and *sādhana*s and instructions on the perfection phase. From his father, he received *Pañjara*, which figures among the rNgog maṇḍalas but whose lineage was reintroduced in the family by rGya Pho ba lung pa. He was also introduced by him to Mar pa do pa's tradition of *Cakrasaṃvara*, which rGyal po dga' had received from various sources.

One of the rNgog maṇḍala is that of *Nāmasaṃgīti* according to the *gSang ldan* tradition. Although the transmission continued in the family in previous generations, Rin chen bzang po received it again from a lama called bZang mo ba, who was the lineage-holder of a transmission coming down from rNgog mDo sde, and from then on that lineage reentered the family.[1243] The *Deb ther dmar po* specifies that this master was named 'Phyong pho ba.[1244]

Like his forefathers, Rin chen bzang po supplemented his hereditary transmission with teachings from other masters. From Master Rin gzhon, whose complete name is given as Rin chen gzhon nu in the *lHo rong chos 'byung*, he received Mar pa do pa's cycles of *Cakrasaṃvara* and instructions on sPar phu ba Blo gros seng ge's tradition.[1245] With Master rDo rje rin chen,[1246] he learned treatises of the vehicle of characteristics, such as the *Unsurpassable Continuity* (*rGyud bla ma*), Śantīdeva's *Guide to the Bodhisattva's Way Of Life* (*sPyod 'jug*) and *Compendium of Instructions* (*bSlab btus*), the *Twenty Verses on the [Bodhisattva] Vows* and the *Pramāṇa Summary*. From Master 'Od zer dpal, who figured in his ordination committee in Zul phu, he requested the liturgical prayer of the Medicine Buddha and the seven-fold practices to generate *bodhicitta* from the lineage of the Kashmiri Mahapaṇḍita Śākyaśrībhadra (1127-1225).

Lifestory

> [Rin chen bzang po][1247] was ordained in his eighteenth year while in Zul phu, and received the full ordination in his thirty-third year. In his thirty-fifth year *(in the female earth-ox year)*, he went to mDo khams. After that, he gathered students from all around dBus, gTsang and Khams. At all times, he was uninterruptedly turning the wheel of Dharma *and maturing* [disciples]. He initiated offerings to masters, congregations of the sangha and excellent manners. He commissioned hundreds of volumes [written] in gold and silver of

---

[1243] See section II.3.2.6.1. The lineage is as follows: mDo sde -> rTsags Dar ma rgyal po -> mTshur Dum bu kha pa -> dGe bshes bZang mo ba -> Rin chen bzang po

[1244] *Deb dmar*, 65.

[1245] sPar phu ba was one of Phag mo gru pa's disciple, famous for his knowledge and realization of mahāmudrā. http: //www.treasuryoflives.org/biographies/view/Parpuwa-Lodro-Sengge/6159, accessed on 11/03/2016.

[1246] This master is called Rin chen rdo rje in ST3 and ST2, but also rDo rje rin chen in the *Deb dmar*, 65.

[1247] ST1, 18.2; ST2, 43.5.

> all of the *bKa'* [*'gyur*] and *bsTan* [*'gyur*] without omission, with the tantras of the Secret Mantra, dhāraṇī- and knowledge-[mantras], sūtras and so on. He performed inconceivable offerings to the [three] jewels and service to the temples. The greatness of his qualities and the way he lived are clearly expounded in his detailed hagiography.

As argued above, I generally favour the *lHo rong chos 'byung*'s dates over those provided in the *Deb ther sngon po*, generally one cycle of twelve years earlier. In the case of the birth of the first two children of rGyal po dga', however, the *lHo rong chos 'byung* seem to err by one to two cycles: Seng ge sgra is probably not born in 1211 but rather in 1235, and the chronology similarly makes more sense if Rin chen bzang po is born in 1243 and not 1235. Both sources agree on the date of birth of the third child, Chos rdor, in 1246. Thus, the three brothers would be born in the lapse of 11 years (1235 to 1246), as opposed to the unlikely lapse of 35 years provided in the *lHo rong chos 'byung* (1211 to 1246). It must finally be remarked that ST1, unlike anywhere else in the text, specifies in a note that Rin chen bzang po was thirty-four in the female earth ox year 1289 (that is to say that he was born in 1255). This seems to be mistaken, and is not repeated in any other source.

Thus, in all likelihood, Rin chen bzang po was born in 1243. In 1260, at seventeen, he travelled to the nearby monastery of Zul phu (on the eastern bank of the sKyid chu), which was one of the six important seminary of Central Tibet, where he took initial ordination. This *Vinaya* settlement was founded by Bya 'dul 'dzin brTson 'grus 'bar, with whose disciple Rin chen bzang po's uncle, gZi brjid grags, was ordained.[1248] It was probably there that Rin chen bzang po studied the vehicle of characteristics with rDo rje rin chen. He was fully ordained in 1275, at 32, with the abbot Zul phu ba Chos grags dpal (ca. 1235/1247-1296/1308),[1249] accompanied by 'Od zer dpal (*las slob*) and Ye shes dpal (*gsang ston*).

gZi brjid grags died in 1269. Rin chen bzang po presided over the funeral ceremonies, and became the abbot of sPre'u zhing. A few years later, between 1278 and 1280,[1250] he went to Eastern Tibet, and his elder brother, Seng ge sgra, became the interim abbot, although he was not a monk. In Khams, Rin chen bzang po gathered many disciples. Later, he also went to Tshal Yang dgon, a monastery near lHa sa founded in 1175 by Bla ma zhang, where he transmitted the rNgog cycles at the request of the 11th abbot, Byang chub bzang po.[1251] He taught in the retreat center and to the hereditary lamas of Tshal Yang dgon. Thus, he attracted many disciples from Khams, dBus and gTsang and became an important patron with the

---

[1248] See Sørensen 2007, 38-41 and 167-174, which is an "abbatial succession" (*mkhan rabs*) of Zul phu, with an introduction by Per Sørensen. A short history of Zul phu also figures in BA, 79-81.

[1249] The name of the ordination committee does not appear in the *Rosaries* but in *Deb dmar*, 65: *mkhan po zul phu ba chos grags dpal/ las slob 'od zer dpal/ gsang ston ye shes dpal*. According to Sørensen and Hazod 2007, 2: 696, and Sørensen 2007, 41, Chos grags [Rin chen] dpal was Zul phu's 5th abbot from about 1263 to 1296/1307.

[1250] According to the *Deb dmar*, 65, Rin chen bzang po went to Khams five years after gZi brjid's death, when Rin chen bzang po was in his thirty-second year.

[1251] Sørensen 2007, 108; *Deb sngon*, 495; *Deb dmar*, 65: *'tshal pa'i yang dgon sgom sde dang dbon brgyud kyi bla mar gyur*.

wealth amassed by his teaching activity. He enlarged his own seat by erecting new temples and took part in the trend of the period by commissioning a copy of the canon in silver and gold letters, amounting to several hundred volumes.[1252] He also sponsored the monastic communities of Central Tibet, such as those of sKyor mo lung and Zul phu.

Thus, Rin chen bzang po was a very active throne-holder, and it is likely that sPre'u zhing became an important monastery at his time. The *Deb ther sngon po* states that he was considered an incarnation of Mar pa, and he is credited with authoring a hagiography of Mar pa called the *Hagiography in four stages* (*rNam thar rim bzhi pa*), which remains unavailable.

Works

> Lama Rin chen bzang po composed a maṇḍala-ritual for the Combined Families [*Pañjara*], as well as an *abhisamaya* (*mngon rtogs*) and notes on the empowerment; an *abhisamaya* for *Mahāmāyā* and one for *gSang ldan* as well as the Five-fold Continuous gTor ma and the *Hagiography in Four Stages*.[1253]

According to the *Rosaries* and related sources, Rin chen bzang po composed several rituals on the practices of *Pañjara*, *gSang ldan* and *Mahāmāyā*, that is to say recently reintroduced rNgog maṇḍalas, at least with regards to the former two. As argued earlier, there are a few texts in volumes 10 and 11 of the NKSB attributed to Rin chen bzang po by the editor. These works only partially cover the topics addressed by Rin chen bzang po, and their colophons state that they were compiled by rNgog gZhung pa Rin chen *dpal* bzang po, in the solitary place of Brag dmar chos 'khor gling. This refers to the son of Sang rin and the nephew of Sangs rgyas yon tan. It is likely that this branch of the gTsang tsha family settled in a new house, Brag dmar chos 'khor gling. Thus, these texts are not by Rin chen bzang po but by Rin chen dpal bzang po, a contemporary of Byang chub dpal. As such, the works by Rin chen bzang po, including Mar pa's long biography, remain unavailable.

3.4.5. rNgog Seng ge sgra and his sons

rNgog Seng ge sgra (1235-1308)

> Master Seng ge sgra[1254] completely received the rNgog teachings from Lama gZi brjid and Master rGyal po dga'. More specifically, he requested from his father the empowerment of Lwa ba pa's [tradition of Cakrasaṃvara], the body

---

[1252] See Schaeffer and van der Kuijp 2008, 36-38. At this time, i.e. late 13th-century, the compilation and copy of the Buddhist canon was becoming widespread. The information initially comes from the *Deb dmar* of Tshal pa Kun dga' rdo rje, who himself was instrumental in the compiling of the *Tshal pa bka' bgyur*. Rin chen bzang po's golden *bKa' 'gyur* is also mentioned by Byang chub dpal's disciple Mi bskyod rdo rje in MPSB, 1: 162: *gser gyi bka' 'gyur la sogs pa'i/ sku gsung thugs gyi rten bzhengs pa sogs/*

[1253] ST1, 21.6-7: *bla ma rin chen bzang pos/ rigs sdus kyi dkyil 'khor gyi cho ga/ mngon rtogs/ dbang gi tho yig/ ma ya'i mngon rtogs/ gsang ldan gyi mngon rtogs/ brgyun gtor cha lnga/ rnaṁ thar rim pa bzhi pa rnams mdzad do*/

[1254] ST1, 16.5-17.6; ST2, 42.3-8. See also ST3, 88; *lHo rong chos 'byung*, 61.

maṇḍala from Ghaṇṭāpā's [tradition], and the *abhisamaya* from Lūyipa's [tradition]. He [also received] the *Explanation of the Meaning of the Name-mantra*, the *Later Saṃpuṭatantra*, *Black Jambhala*, *Rahula*, and the *Sa bdag srog 'khor*.[1255]

He requested from Lama bSas pa the seventeen-goddess Tārā empowerment, the *sādhana*s composed by Ravigupta and the *Alikali*. From Lama bKun bsod, he requested Vajratārā's *Body Maṇḍala*, the *Tantra on the Various Tārās*[1256] and Seven-Eyed Tārā. From Lama En ker ba, he requested *White Tārā* and the *Zab mo snang byed*. From Master rDor rin from Srin po ri, he received [*Vajra]vāhāri* of the sPyal tradition, the *Hundred Sādhanas* translated by Ba ri [Lo tsā ba], the *Pramāṇa Summary* [of Phya pa Chos kyi seng ge], the *Unsurpassable Continuity* (*rGyud bla ma*), the *Teaching on the Universe*,[1257] and the *Essential Expositions of the Stages and Paths* (*sa lam stong thun*). [17] From Master Rin gzhon, he requested the *Root Tantra of Cakrasaṃvara*. From rGya pho ba lung pa, he requested the empowerment of the Combined Families of *Pañjara* and *Vajrabhairava* according to sKyo's tradition. From Lama Tshul chen, he requested the cycle of *Vajrabhairava* according to sKyo's tradition and the *Zab mo snang byed*. From Lama lHa pa, he requested Jñānapāda's tradition of *Guhyasamāja*. From Lama Gan ba pa, he requested the empowerment of Mar pa's tradition of *Guhyasamāja*, its root tantra and the *gNyis med rnam rgyal*. From Lama La mo ba, he requested the bKa' gdams *Stages of the Path*. From Master Śākya Seng ge, he requested the *Twenty Verses on the [Bodhisattva] Vows*. At 'Bri gung, he requested from gCung Rinpoche (1210/1-1279/80) his tradition of the six doctrines of Nāropa, and from Rinpoche bKra shis Bla ma (from sTag lung pa), he asked guidance on his own tradition [of the six doctrines], as well as the *Hundred and Eight Names of Tāra*. From the Dharma Lord Rang byung rdo rje (1284-1339), he requested the *Introduction to the Three Bodies*. From Master Tshul rin, he received Mahapandita Śākyaśrībhadra's (1127-1225) tradition of Black Jambhala. From the monk dKon skyabs, he requested *Vajraḍāka*. From the rinpoche from Ra lung,[1258] he requested the *Six Cycles on Equal Taste* and the *Dohas* of Ti phu pa's tradition. From Rinpoche Dul drug pa,[1259] he requested the *Guidance on Loving-*

[1255] Is this the *Sa bdag srog gi 'khor lo zhes bya ba'i rgyud* of the *Rnying ma rgyud 'bum*, 45: 945-948?

[1256] *Sarvatathāgatamātṛtārāviśvakarmabhavatantra* (*De bzhin gshegs pa thams cad kyi yum* ***sgrol ma las sna tshogs*** *'byung ba zhes bya ba'i* ***rgyud***, tōhoku 726)?

[1257] *'Jig rten bstan pa*, third chapter of the *Abhidharmakośa*.

[1258] This may refer to Rwa lung Monastery's fourth throne holder, bKra shis Bla ma (1231-1297). ST2 reads *man lung pa* instead of *ra lung pa*. It is therefore possible that this master of Seng ge sgra was Man lung Gu ru, who was born in 1239 and was an important late 13th-century master. He held the rNgog lineage of *Catuṣpīṭha* that mDo sde had passed on to sNgo tsha Chos sku and that reentered the family with Byang chub dpal.

[1259] Or maybe Legs drug pa, as in ST2?

kindness.[1260] From ’Gro mgon ’phags pa (1235-1280), he requested the *bodhicitta* [vow] according to the Madhyamaka tradition. From Lama bZang mo ba, he requested the empowerment of *gSang ldan*. From Master Jo dBen pa, he received the three traditions of the Pacification of Suffering, those of Rma [Chos-kyi-shes-rab], So[-chung Dge-’dun-’bar] and Kaṃ [Ye-shes-rgyal-mtshan],[1261] the three aspects of Tārā, and sNur tradition’s of *Vajravidāraṇa*. From Ri pa Man lungs pa, he requested the poison empowerment of *Hayagriva*. From Khams pa rDo rje dpal, he requested the *Haphazard Transference*.[1262] From La Drang srong, he requested the weapon empowerment.[1263]
From his forty-third to forty-fifth year, he was the seat-holder [of sPre’u zhing] while the Precious Lama [rNgog Rin chen bzang po] was in mDo khams.

rNgog Seng ge sgra was the first son of rGyal po dga’. Unlike his younger brother Rin chen bzang po, who became a monk, Seng ge sgra had three children, whose name is only recorded in ST1. In fact, a major difference between ST1 and all other sources, is that the former describes in more detail the life of Seng ge sgra and is the only one to describe the life of his son, Rin chen rgyal mtshan, and to give the name of his two other sons and of his three grandsons. This indicates that, at the time of compilation of ST1(1360) the power balance in gZhung was not yet settled in favour of Rin chen bzang po and his heirs, and the compiler, dPal gyi rdo rje, saw himself equally a student of these two branches of the gTsang tsha branch. For him, Seng ge sgra and Rin chen bzang po were on an even foot, as were the former’s son, Rin chen rgyal mtshan, and the latter’s nephew, Chos kyi rgyal mtshan, despite the latter being the abbot of sPre’u zhing. In some ways, there is a parallel between Seng ge sgra and his father, rGyal po dga’, who were both important religious masters and householders, and Rin chen bzang po and his uncle gZi brjid grags pa, who were ordained and played a large role in the development of sPre’u zhing as a monastery. This equal footing disappears from later sources, where the ordained seat-holders rise to prominence while their brother, however equally learned and accomplished, become subordinates.

Despite a rather lengthy biographical account, most details concern the transmissions received by Seng ge sgra and may derive from a record of teachings received, unlike Rin chen bzang po who had his own hagiography. Just as all rNgog masters, Seng ge sgra received his family’s traditional transmissions, the rNgog maṇḍalas, together with the other transmissions received by his predecessors over the years. In his case, although he relied on gZi brjid grags pa, it appears that it was his father who passed on to him most of the legacy. He also relied on rGya Pho ba lung pa, who held several of the rNgog traditions, particularly *Pañjara*, in direct

---

[1260] Text composed by the ’Brug pa master rGod tshang pa mGon po rdo rje (1189-1258)?

[1261] The spelling *sma po skaṃ* is mistaken and should be edited to *rma so kam*; this expression refers to three masters which are part of the middling lineage of Zhi byed.

[1262] This is a practice said to come from Nāropa and Mar pa, also called *Gong du ’pho ba’i man ngag* and part of the *sNyan gyi shog dril bzhi*. See DND, 8: 219-220.

[1263] The exact nature of that *mtshon dbang* is unclear. rNgog Rin chen rgyal mtshan received this transmission from his father under the name *mtshon srung*. It is likely that the two are protective practices against weapons, to be related to similar practices against poisoning called *dug dbang*.

line from rGyal tsha Ra mo (1134-1170). The transmission may have occured in the end of rGya's life and in Seng ge sgra's infancy, as Rin chen bzang po did not receive that transmission.

Seng ge sgra attended several teachings together with his brother. He most importantly received *gSang ldan* from bZang mo ba, who held rNgog mDo sde's lineage. He studied with his father the Indian commentary of that practice, the *Explanation of the Meaning of the Name-mantra*. Like Rin chen bzang po, Seng ge sgra met the hermit from the neighbouring mountain of Srin po ri, rDor rin, from whom he studied several treatises on the path of characteristics. They also relied on Master Rin gzhon, from whom they received Cakrasaṃvara cycles.

Seng ge sgra met many of the great seat-holders of his time. He established a relationship with *sPyan snga* gCung Rinpoche rDo rje grags pa (1210/1-1279/80), who was 'Bri gung's 4th abbot from 1255 to 1278.[1264] He relied on the sTag lung abbot, dBon Mangala Guru, alias bKra shis Bla ma (1231-1297), who held the abbacy from 1273 to 1292, and received some teaching from the third Karma pa, Rang byung rdo rje (1284-1339). He also requested the *bodhisattva* vows from Chos rgyal 'Phags pa (1235-1280), on the throne of Sa skya from 1276 to 1280, and one of the most powerful lamas of Tibet thanks to his relationship with the Mongol emperor Kubilai.

On top of these, Seng ge sgra relied on many other masters. Among the transmissions received, he seemed to particularly cherish the practice of Tāra, which was not mentioned until that point in the *Rosaries* despite being considered quite important for Mar pa. This is surprising insofar as one of the important lineages of the White Tāra practice (*yid bzhin'khor lo*) preserved in the KGND is said to pass through the rNgog.[1265] He also received Mar pa's tradition of *Guhyasamāja*, which was only marginally part of the rNgog pa's legacy until that point.

As mentioned earlier, there is some uncertainty on the dates of Seng ge sgra. The *lHo rong chos 'byung* gives 1211-1284, and the *Deb ther sngon po* 1235-1308. According to ST1, Rin chen bzang po went to Khams for two years in 1289, when he was 34, time during which his brother took up the seat of sPre'u zhing. This pushes the dates one cycle further to 1255-1331 for Rin chen bzang po and 1247-1320 for Seng ge sgra, but this may be an error. Given Seng ge sgra's relationship with Rang byung rdo rje (1284-1339), the *lHo rong chos 'byung*'s dates are too early; ST1's dates, on the other hand, do not fit the periods of earlier and later generations. For instance, the *lHo rong chos 'byung* and *Deb ther sngon po* both assert that the third brother, Chos rdor, was born in 1246 and died in 1311. If ST1's dates are correct, he

---

[1264] See Sørensen and Hazod 2007, 2: 721 and http: //treasuryoflives.org/biographies/view/Chung-Dorje-Drakpa/3902 (accessed 2016/03/15)

[1265] KGNDdkar chag, 14: Tāra Yid bzhin 'khor lo → Vāgīśvarakīrti →Mar pa → rNgog Chos sku rdo rje → rNgog Zhe sdang rdo rje → rNgog Kun dga' rdo rje → rNgog gZi brjid grags pa → rNgog Rin chen bzang po → rNgog Chos kyi rgyal mtshan → rNgog sangs rgyas dpal bzang (or gNag rab Sangs rgyas rgyal mtshan according to some *gsan yig*) → rNgog Byang chub dpal bzang → Byams pa gling pa bSod nams rnam rgyal → Khrims khang lo tsā ba bSod nams rgya mtsho.

would be the elder brother, which is not the case from ST1's own perspective. With regards to the year of Rin chen bzang po's ascension to the seat, both the *lHo rong chos 'byung* and the *Deb ther sngon po* state that this happened when gZi brjid died in 1269, which would then mean that Rin chen bzang po was fourteen at the time, which seems unlikely. Also, his encounter with rGya Pho lung pa, who may have been born around 1160, cannot have taken place much later than 1250, but rather somewhat earlier. Thus, although it seems unfair to reject our prime source's only firm datation (which all later sources do), in this case, the *Deb ther sngon po*'s datings seem more reliable.

To summarize, Seng ge sgra was born in 1235. In his infancy, probably before the birth of his brother in 1243, rGya Pho lung pa came to gZhung where he taught *Pañjara* to all those present. Seng ge sgra studied with his uncle and father, and went on to travel to many places to receive transmissions from many masters, famous or not, sometimes with his brother, sometimes alone. His uncle died in 1269. Rin chen bzang po presided over the funeral ceremony and took up the abbacy. Seng ge sgra married with a woman called lHas dkar, and his first son, Rin chen rgyal mtshan, may have been born in 1271, when he was 36. He had two more children, while carrying on an intense religious life, relying on many of the important masters of the time. From around 1277 to 1279, he was responsible of sPre'u zhing while his brother went to Khams. He died at 73, in 1308.

Despite his wide learning, there are only three texts associated with Seng ge sgra.[1266] The first, an empowerment ritual for *Catuṣpīṭha*, is available in the NKSB.[1267] The most mysterious is the third, the *Rosary of Jewel-[like] Hagiographies*, with a title strangely reminiscent of ST1's own title.[1268] It is possible that he was the author of a rosary of biographies of his family's masters, a text that was later expanded by ST1's compiler, who took over that title. This may explain Seng ge sgra's prominence in this text when compared to other sources.

rNgog Rin chen rgyal mtshan (1271?-1326?)

> Guru Ratnadvaja [Rin chen rgyal mtshan][1269] requested perfectly his forefathers' teachings from his uncle [Rin chen bzang po] and his father [Seng ge sgra]. In particular, he requested from his father all *Catuṣpīṭha* cycles without exception (the empowerment, the tantra, the *sādhana*s together with transference); the cycle of Dud sol [ma]; Gri gug ma;[1270] the six doctrines; the

---

[1266] ST1, 21: 6: *slob dpon seng ge sgra yis gdan bzhi'i dkyil chog/ bstan chos nyi ma'i 'od zer/ rnam thar rin chen phreng ba rnams mdzad do/*

[1267] "dPal gdan bzhi pa'i dkyil 'khor gyi cho ga sing ha na das mdzad pa," NKSB, 10: 153-192.

[1268] "Bla ma rngog pa yab sras rim par byon pa'i rnam thar rin po che'i rgyan gyi phreng ba."

[1269] ST1, 18.8-19.5.

[1270] This may refer to a deity in the Dud sol ma's transmission. There are Gri gug ma sādhanas in the vol. 4 of *gDams ngag mdzod*, but they belong to the bKa' gdams tradition.

cycle of *Mahāmāyā*'s perfection phase; [19] the *Ninefold [profound] Path*;[1271] the *Haphazard Transference*; all types of Tārā without exception together with their empowerment and *sādhana*s; the *Vajrabhairava* cycle together with its empowerment; *Vajravārāhī*'s cycle; the protection against weapons;[1272] the poison empowerments; Mar [pa] do [pa]'s cycle of *Cakrasaṃvara*; the *Guidance on Loving-kindness;* the Fivefold Mahāmudrā;[1273] the Five Capabilities of dBu ri pa;[1274] the *Yoginīsañcāra*;[1275] two former diffusions of *Hevajra* et [*Vajra*]*vārāhī*; *Vajraḍākinī*; the three traditions of the Pacification;[1276] and the cycles of the Prajñāpāramitā's Cutting.

He requested from the Dharma Lord dKar ma pa [Rang byung rdo rje] his commentary on the *Two Segments*,[1277] *Kālacakra*, the threefold cycle of commentaries,[1278] the *Introduction to the Three Bodies*, the perfection phase *gTum mo*, the guru yoga and so on. He requested from the 'Brug pa Rinpoche Seng ge rgyal po (1289-1325)[1279] the *Six Cycles on Equal Taste*, *gTum mo* and *Vārāhī*, the cycle of wisdom protectors, the Coemergent Union, songs, lama-offerings and so on. In lHa pa, he requested (from gZi brjid rgyal po)[1280] the empowerment of the *Guhyasamāja* cycle, the guru yoga, the bodhisattva vows, and so on. From Lama mKhas btsun pa, he requested the *Two Segments*, the [*Tshad ma*] *rigs gter*, the *pāramitā*s, the Four-faced Protector and so on. He requested from both mKhan po Zul phu ba and sKyor mo lung pa the *Vinaya*, *Abhidharma* and *Bodhicāryavatāra*. He requested the Stages of the Path of the bKa' gdams pa from rGya ma pa. He requested much from mKhan po Tshogs chen pa, for instance Tārā, mDo sgrub and so on. He also requested many teachings and instructions from several other lamas and masters.

[1271] This refers to *Mai tri ba'i man ngag zab mo lam dgu phrugs*. A text by rNgog Chos rdor about these key-instructions on the perfection phase is found in NKSB, *mNga' bdag mai tri'i gdams ngag*, 1: 290-308.

[1272] This is probably the same as the *mtshon dbang* received by Seng ge sgra and can be related to the poison empowerment.

[1273] This refers to the 'Bri gung pa's teachings on mahāmudrā.

[1274] This teaching of Lo ras pa (1187-1250) entered the rNgog lineage with gZi brjid grags pa.

[1275] *rNal 'byor ma'i kun tu spyod pa*, Tōhoku. no. 375. Tr. by 'Gos Lhas btsas.

[1276] These are the three traditions of Zhi byed received by Seng ge sgra from Master Jo dBen pa.

[1277] This is the major commentary on the *Hevajratantra* composed by the 3d Karmapa, the *dGyes pa rdo rje'i brtag pa gnyis pa'i 'grel pa dri ma med pa'i 'od.*

[1278] This refers to the "Bodhisattva Trilogy" (*sems 'grel skor gsum*), three major commentaries on *Kālacakra*, *Cakrasaṃvara* and *Hevajra* written by bodhisattvas.

[1279] bCu sum pa Seng ge rgyal po was a disciple of his father sPos skya pa Seng ge rin chen. He became the 6th Rwa lung throne holder in 1313. These dates are those given by the *Deb sngon*. An extensive biography is available in the *Rwa lung gser phreng*, 2: 304-361. Voir aussi Sørensen and Hazod 2007, 1: 192.

[1280] gZi brjid rgyal po (1277-1329) was the 5th Gye re lha khang throne-holder. See Sørensen and Hazod 2007, 2: 679, n. 28

Seng ge sgra's elder son was Rin chen rgyal mtshan, whose life is only narrated in ST1. He was born in a sheep year, maybe 1271, when his father was 36 and he lived to the age of 49. He had two younger brothers, Blo gros seng ge and bSdod nams rin chen, and three sons, called Nam mkha' rgyal mtshan, rDo rje rgyal mtshan and bSod nams bzang po. It is not clear whether or not he was a monk and if he was the father of the three children. He may have been a monk as he went to Zul phu and sKyor mo lung, where he studied *Vinaya* teachings and the path of characteristics, just like his grand-uncle gZi brjid grags pa and uncle Rin chen bzang po did before him. If he was a monk, the sons were probably those of his brothers. The name of their house is not known, and despite his intensive training, nothing is known about his possible compositions.

It is remarkable that he is the final holder of almost all rNgog pa lineages as they are given in ST1. Generally, they go from gZi brjid grags pa to both Seng ge sgra and Rin chen bzang po, and then on to Rin chen rgyal mtshan, and sometimes Chos kyi rgyal mtshan. This clearly indicates that the author considered himself a disciple of Rin chen rgyal mtshan, and by extension of Seng ge sgra. This situation is completely reversed in ST2, where Chos kyi rgyal mtshan and then Don grub dpal, the sPre'u zhing abbots, are given a clear prominence.

Like his forefathers, Rin chen rgyal mtshan received received the rNgog pa legacy enriched with the various teachings each generation was adding to the lore transmitted in sPre'u zhing. He relied on his uncle Rin chen bzang po and his father Seng ge sgra, with a marked preference for the latter. Like him, he also relied on well-known and powerful throne-holders, like the Third Karma pa and the throne-holders of Rwa lung and Gye re lha khang.

3.4.6. rNgog Chos kyi rgyal mtshan (1283-1359)

> Lama Chos kyi rgyal mtshan *Guru Dharmadvaja*[1281] obtained most of his forefathers' teachings and the six doctrines from Lama Rinpoche [Rin chen bzang po]. From Lama Seng ge sgra, he requested the empowerments of the Combined Families of *Pañjara*. At 'Bri gung, he requested from Rinpoche rDor rin his own system of guidance. At Yar lung, he studied the *Vajrāvali* with Lo tsā ba Grags pa rgyal mtshan. At Zul phu, he studied *pramāṇa* with a visiting lama, learned the [*Śikṣā*]*samuccaya* and the *Bodhicāryavatāra* with mKhan po rGyal mtshan dpal, studied the *Vinaya*, the *Pramāṇavārtika* and *Viniścaya* with the Chant Leader Master mDo sde, and he also taught there. He requested from Master bKa' bzhi pa the empowerment of Ghaṇṭāpā's [tradition] of *Cakrasaṃvara*. [ST2, 44:2] He requested practical guidance on the Great Compassionate one from Master Rin byang. He requested many other teachings on infinite vehicles from many other masters, but this is not written here by fear of prolixity.
>
> This holy master spread the teachings of the rNgog as far as Dar rtse mdo in Eastern Khams. (His great qualities and great wonder are inconceivable: he

[1281] ST1, 18.5-7; ST2, 43.8-44.2. See also ST3, 88; *Deb sngon*, 496 (BA, 411); *lHo rong chos 'byung*, 62-63.

> declared that he had a vision of *Cakrasaṃvara* in Khyag pa dkar po, and when he gave the bodhisattva vows in Khams, there was a rain of flowers, and so on.) It is said that until now, there are [people] who circumambulate his teaching throne and make offering [in front of it] at auspicious times. As for the qualities of his accomplished yogic discipline, there are many stories: once he was giving an empowerment at ’Bri gung, a bonfire burnt outside of the building when he displayed the circle of protection; once he was giving an empowerment at sTag lung, an evil ghost was expelled to the rim of the outer sea, and so on.

rGyal po dga’s third son, Chos rdor (1246-1311), is not particularly known for his spiritual education. He took up the duty of furthering the family lineage, and had five sons. The first, Chos kyi rgyal mtshan, also called Chos rgyal, became sPre’u zhing’s fourth abbot after the demise of his uncle Rin chen bzang po in 1319, and is the main link to the next throne-holder, his nephew Don grub dpal (1331-1398). As such, he figures prominently in rNgog pa lineages listed in ST2 and in later accounts such as those passing through rNgog Byang chub dpal and on until the KGND. In these accounts, his cousin Rin chen rgyal mtshan is completely omitted, unlike in ST1 where he ends almost all lineages. Strangely, Chos rgyal’s biography in ST1 stops midway, but is continued in ST2. This gives the impression that ST1 was composed during the life of Chos rgyal, but the colophon states that it was completed in 1360, that is to say one year after Chos rgyal’s death in 1359. It is thus obvious that the author of ST1 favored Seng ge sgra and Rin chen rgyal mtshan, while maintaining a deep reverence for Rin chen bzang po, who is called “Rinpoche”, a name generally given to contemporary masters, but that he was not particularly close to Chos rgyal. This impression is reinforced by the length of Seng ge sgra’s and his son’s biographies. As the reverse is true in ST2, it is possible that some tension appeared between Rin chen rgyal mtshan and Chos kyi rgyal mtshan, or that at least some distance between the two developed, reminiscent of the distance that grew between the gTsang tsha and rGyal tsha branches after sPre’u zhing was founded. This distance could explain errors regarding Chos kyi rgyal mtshan contained in ST1, such as a double sanskritization,[1282] a different lifetime (ST1 states he died at 78 but he is otherwise generally considered to have lived to 76), or the general lack of detail and complete omission of the visions and miracles he is considered to have had in other sources. It is possible that although Chos rgyal was sPre’u zhing’s abbot between 1319 and 1359, some did not see him at the time as the main rNgog propounder.

rNgog Chos kyi rgyal mtshan was born in 1283 and died in his 77th year, in 1359. These dates of birth and death, together with those of his father Chos rdor, are the only ones on which the *lHo rong chos ’byung* and *Deb ther sngon po* agree. Although it is not stated that Chos rgyal became a monk, he certainly did, as he gave the novice vows to his nephew Don grub dpal, had no children of his own and ascended to the seat of sPre’u zhing, which at the time had become a somewhat large monastery. Like his uncle, he went to Zul phu, the neighbouring seminar, where he studied several treatises of the path of characteristics (*pramāṇa*,

[1282] His name is sanskritized as Dharmaketu in the lineages of ST1, and Dharmadvaja at other places (*dharma dho dzas* in ST1, 18), as both *ketu* and *dvaja* can be sanskritizations of *rgyal mtshan* (“victory banner”). ST2 only calls him Dharmadvaja.

abhidharma, and the *Bodhicāryavatāra*) from various teachers. Like his uncle Seng ge sgra, he studied with the abbot of 'Bri gung Monastery, which at the time was bCu gnyis pa rDo rje rin chen rgyal po (1278-1314/5, tenure from 1293/6 to 1314).[1283] This 9th abbot supervised the rebuilding of the monastery following its destruction by the Sa skya-Mongol army in 1290, stayed in long retreats and was famous for his teachings on mahāmudrā and the six doctrines, which Chos rgyal received from him. The young rNgog also relied on Yar lungs Lo tsā ba Grags pa rgyal mtshan, who translated several texts in the canon.[1284] From him he received the *Vajrāvali*, which afterwards continued to be transmitted in sPre'u zhing.[1285]

Like Kun dga' rdo rje and Rin chen bzang po, Chos rgyal is said to travel as far as the bordering city of Dar rtse mdo (ch. Kangding) in Khams, to the far east of the Tibetan plateau. He met many masters there, like the rinpoche from the recently founded sTag lung pa monastery of Ri bo che, and gathered many devoted disciples. Their donations were sent back to sPre'u zhing, and the monastery was enlarged. Several miraculous events are mentioned in his biography, such as having a vision of Cakrasaṃvara at the mount Khyag pa dkar po,[1286] manifesting physical protection fences or expelling demonic forces while granting an empowerment. As far as the Cakrasaṃvara vision is concerned, it must be noted that this deity does not figure among the main rNgog transmissions. It is as if, with time passing and by increasing the amount of transmission they held, the sPre'u zhing abbots were progressively reducing their specificity as holders of a distinct rNgog pa bka' brgyud heritage and became mainstream Tibetan lamas, thus losing their distinctive quality.

Works

> Lama Chos kyi rgyal mtshan compiled extensive notes on the *Two Segments*, a recitation method for *Mañjuśrīnāmasaṃgīti* and some *gaṇacakra* [rituals].[1287]

Chos kyi rgyal mtshan is the author of a large commentary on the *Hevajratantra*.[1288] As is customary in the rNgog tradition, there is a long historical passage at the beginning

---

[1283] See Sørensen and Hazod 2007, 2: 722 and http: //treasuryoflives.org/biographies/view/Dorje-Rinchen/3906 (accessed on 2016/03/18)

[1284] http: //www.tbrc.org/#!rid=P2637 The TBRC gives the dates 1242-1346, although it is likely that he was born later than that. He was the uncle of Bo dong Phyogs las rnam rgyal (1376-1451).

[1285] The *lHo rong chos 'byung*, 62, has it that Chos rgyal studied the *Vajrāvali* with the *sPyan snga* of [gDan sa] thel, Grags pa rgyal mtshan. This seems unlikely (*thel gyi spyan snga grags pa rgyal mtshan la rdo rje phreng ba*)

[1286] This may refer to the Ka ba dkar po mountain, which forms the divide between the Mekong and Salween river basins on the border between Yunnan and Tsha ba rong. It was known from the time of the second and third Karma pa, and rNgog Chos rgyal could have gone there (See Buffetrille 2014). The pilgrimage of Ka ba dkar po is not especially associated with Cakrasaṃvara, however, and the name could therefore refer to another place.

[1287] ST1, 21: 7; ST2, 47: 5.

[1288] *Commentary on the Glorious Hevajra called Ornaments of Jewels* (*dPal kya rdo rje'i 'grel pa rin chen rgyan*) NKSB, vols. 12 & 13, NKCK, 5: 31-604. There are a few more pages in the end of the NKSB version than in the NKCK. The NKCK version is also on TBRC (W1KG11759), with the same pages missing. The text does not come from the gNas bcu lha khang.

concerning the lives of the lineage masters, mainly Tilopa, Nāropa, Mar pa and rNgog Chos rdor (pp. 19-40). Chos kyi rgyal mtshan concludes this presentation by saying that himself received it from lama Rin chen bzang po, without further details but thus establishing his authorship.[1289] He also compiled some manuals on *Nāmasaṃgīti* and unspecified *gaṇacakra*s, but these are not reproduced in the NKSB.

3.4.7. rNgog Don grub dpal (1331?-1398?)

> It is said that when Lama Don grub dpal ba[1290] reached his sixth or seventh year, although he had only partially learned how to read, he knew how to. In his twelfth year, he took the novice ordination from Lama Rinpoche [Chos rgyal] and mKhan chen brTson ’grus dpal ba. From his twelfth to fifteenth year, he became proficient in *Pañjara*, the *Two Segments*, *Mahāmāyā*, *Nāmasamgīti*, and so on. In his twentieth year, he received the complete ordination in Zul phu, in front of the full community of faithful *bhikṣu*s, from the preceptor Byang chub dpal, the assistant bSod nams mgon po, the secret perceptor Rin chen dbang phyug, and others. (From them, he also perfectly received the empowerments of the *Vajrāvali* from [’Khor] lo grags’s lineage,[1291] the *Niṣpannayogāvali*,[1292] the *Jyotirmañjarī*[1293] and others, and he practiced a lot). He requested the *Śadanggayoga* from mKhan chen bKras shis seng pa, the seat-holder of dBe ba can.[1294] From *sPyan snga* Grags pa byang chub, he requested Phag mo gru [pa’]s *Complete Works* and the *Stages of Experiential Instructions* (*nyams khrid kyi rim pa rnams*). From Master dKon mchog [45] pa, he requested the *Essential Instructions [on Avalokiteśvara*] according to Tshem bu’s tradition and the cycle on Cutting from the lineage of Ma gcig lab sgron. From Bla ma dam pa bSod nams rgyal mtshan, he received the bodhisattva vows of the Madhyamaka tradition and the *Profound Instructions on the Three*

[1289] NKSB, 12: 40: *bla ma rin chen bzang pos dbang byin brlabs rgyud gdams pa dang bcas pa rdzogs par zhus shing/ de nyid la bdag gis zhus pas.*

[1290] ST2, 44.5-45.4. See also ST3, 88-89; *lHo rong chos ’byung*, 63-64.

[1291] According to the colophon of the *Vajrāvali-nāma-maṇḍalavidhi* (*dKyil ’khor gyi cho ga rdo rje phreng ba*, Tōhoku 3140), this ritual compendium compiled by the abbot of the Vikramaśila Monastery, Abhayākaragupta, (late 11th c.-early 12th c.), was first translated into Tibetan by the author and ’Khor lo grags. It was revised several times, but according to BA, 1047-1048, it was Chag Lo tsā ba’s version that was favored in the 15th century. Only the syllables *lo grags* are legible in the note added on the bottom of ST2, 44, but it may refer to that original translation, although it was probably quite confidential, as Mahaside 1997, 30-33, does not mention him in his history of the transmission in Tibet.

[1292] *rDzogs pa’i rnal ’byor gyi phreng ba*, Tōhoku 3141.

[1293] *sByin sreg gi cho ga ’od kyi snye ma*, Tōhoku 3142. This text and the two previous ones by Abhayākaragupta are referred to as the *Three Rosaries* (*Phreng skor gsum*).

[1294] Sørensen and Hazod 2007, 2: 696-697: bBe ba can was one of the six main seminaries in Central Tibet. bKra shis seng ge was its 6th and 8th throne-holder and flourished there in the middle of the 14th century.

Aspects.[1295] From the ’Bri khung Rinpoche Chos kyi rgyal po (1335-1407),[1296] he requested the Five-fold Mahāmudrā and from his father, Lama Kun rgyal ba, the Amitāyus empowerment. He requested the Vinaya once from mKhan chen Byang chub dpal, the reading transmission of the Deity of Medicine (*sman lha*) from the assistant preceptor, and the *Parṇaśavarī* cycle from gSang lte ba. He listened to many [teachings] from Master dKon mchog rdo rje, such as [Saraha’s] *Three Cycles of Dohā*, the *Five Dharmas of Maitreya*, the empowerment permission of the *Cakrasaṃvara* Aural Transmission, (Vajragarbha’s commentary,[1297] Nāropa’s great commentary,[1298] the tantra [empowerment] and reading transmission of *gSang ldan*), the [*Abhidharma*]*kośa* and so on.[1299] He said that he requested a lot from the Realized one (*rtogs ldan*) Rin byang pa: the essential instructions on the Five Capabilities, the Five Royal Sūtras,[1300] the twenty-one Tārās, Black Jambhala and so on. Although the qualities and activity of this holy lord of all yogins are inconceivable, only a few are written here.

The biography of Don grub dpal available in ST2 (and repeated in the *lHo rong chos ’byung*) does not provide much detail about his life except the numerous transmissions he received from many masters. As regards his date of birth, there is again the 12-year difference between the *lHo rong chos ’byung* and the Deb sngon, the former stating that he was born in 1319 and the latter in 1331. Remarkably, the two sources agree on the dates of birth and death of his uncle Chos rgyal (1283-1359) and his son Byang chub dpal (1360, one year after Chos gyal’s passing-1446). If we choose the dates of the *lHo rong chos ’byung*, it means that Don grub dpal was born when his father was 16, became abbot at 40, and that Byang chub dpal became abbot at 26, in 1386. According to the *Deb ther sngon po*, this means that Don grub dpal became abbot at 28, had a son at 29, and that his own son Byang chub dpal became sPre’u zhing’s abbot at 38, in 1398. Given that Don grub dpal was a monk and that Byang chub dpal played a large role for the development of sPre’u zhing, the dates advanced in the *lHo rong chos ’byung*, which mean that Don grub dpal became abbot and had a son later in life, and the

---

[1295] The *Tshar gsum khug pa dbang gi gdams ngag* (here *man ngag*) is a one-folio text on devotion to the guru said to be taught by Tilopā to his yogi-disciple. Its first occurrence is in gTsang pa rgya ras’s *gSung ’bum* and it is now also preserved in the *’Brug lugs chos mdzod chen mo*, 56: 11.

[1296] Nyer gnyis pa Chos kyi rgyal po was the tenth throne-holder of ’Bri gung Monastery. His father was ’Bru rgyal Kun dga’ rgyal mtshan dpal bzang po, a brother of the ninth throne-holder. See Sørensen and Hazod 2007, 2: 723.

[1297] This is the *Hevajrapiṇḍārthaṭīkā* (*Kye’i rdo rje bsdus pa’i don gyi rgya cher ’grel pa*, tōhoku 1180), a commentary on *Hevajra* by Vajragarbha.

[1298] This is the *Sekoddeśaṭīkā* (also known as *Paramārthasaṃgraha*, *dBang mdor bstan pa’i ’grel bshad don dam bsdus pa*, tōhoku 1351), a *Kālacakra* commentary by Nāropa.

[1299] *Gong dkar gsan yig*, 423: Rin po che dKon mchog rdo rje also transmitted the empowerment of Amitāyus nine-deity to Don grub dpal. That lineage was then passed on to Byang chub dpal.

[1300] *rGyal po’i mdo lnga*: These are five sūtras that are condensed forms of longer ones (for example the *Heart Sūtra* for the *Prajñāpāramitā in 100.000 Verses*). They are called “royal” by Tibetans because they were recited in the religious services of the early kings. See Lopez 1987, 30.

inverse for Byang chub dpal seems acceptable. The reverse is also possible and makes more sense on a historiographical level: ST1, written in 1360, does not give the name of Seng ge ’bum’s last child, Legs pa dpal, which appears in later accounts. It means that he was either not born or very young in 1360, which, if we accept the *lHo rong chos ’byung*’s dates, would make for a very long gap between the birth of Don grub dpal in 1319 and the birth of his younger brother in the mid to late 1350s. As both versions are acceptable, I settle only with caution on the *Deb ther sngon po*’s dates (1331-1398), which make for a more natural flow of generations.

Don grub dpal was the son of Seng ge ’bum (1303-1383) and the nephew of Chos kyi rgyal mtshan. He had two younger brothers, Don grub bzang po and Legs pa dpal, about whom nothing is known. At eleven, he received the novice ordination from his uncle, Chos kyi rgyal mtshan, and from mKhan chen brTson ’grus dpal, who may have been a lama in sPre’u zhing. Like his uncle and great-uncle, he then went to Zul phu, where he was granted full ordination by the preceptor Byang chub dpal, assisted by master bSod nams mgon po and the secret preceptor Rin chen dbang phyug,[1301] as well as the assembly of monks of Zul phu. There, Don grub dpal also learned the *Vinaya* and other subjects. He had many more teachers, as mentioned in his biography which is more a record of teachings received than a lifestory.

Despite being a monk and having two brothers, Don grub dpal disrobed and married a woman named dKar khrom, with whom he had a son, Byang chub dpal, who became the next throne holder of sPre’u zhing. The reason for this is not clarified; it is possible that his two younger brothers did not produce any heir, although a simpler reason is not to exclude. In any case, the year 1359 was a turning date at sPre’u zhing, with the passing of Chos rgyal, the enthronement of Don grub dpal as sPre’u zhing’s abbot and Byang chub dpal’s birth a year later, on the very year than ST1 was composed. It is possible that these rapid changes unsettled the reputation of sPre’u zhing, as it is said in both the *lHo rong chos ’byung* and the *Deb ther sngon po* that in the early part of the life of Byang chub dpal, the success of the family lineage had waned (see II.4 for details).[1302]

Although Don grub dpal was sPre’u zhing’s abbot, he was not the only significant teacher of the rNgog family at that period. His cousin Sangs rgyas yon tan, the son of his uncle Khrom rgyal ba, also possessed a degree of influence on the later rNgog generations and in other monasteries, although his biography is very short in ST2. Don grub dpal is the last one in all lineages listed in ST2, but in other accounts (*Gong dkar gsan yig* for instance), one can see that although Byang chub dpal received most empowerments from his father, he also relied on his uncle Sangs rgyas yon tan and on other masters such as the 16th sNar thang abbot Grags pa don grub for oral transmission and explanations. It is possible that Don grub dpal held all empowerment lineages but was not an expert in the exegesis of the tradition, or that his authority was contested in sPre’u zhing.

[1301] Although the expected spelling for Rin chen dbang phyug’s title is *gsang ston* for “secret preceptor,” ST2 has *gsang lte ba*, edited as *gsang ste ba* in the *lHo rong chos ’byung*. ST3 calls him gTsang pa dBang phyug.

[1302] *lHo rong chos ’byung*, 65: *rngog pa’i chos skor slar yang bla ma ’di’i sku smad la dar bar byung ngo*. *Deb sngon*, 496-497 (BA, 411): *log sgrub can gyi gang zag ’ga’ res/ bdag po drung chen pa la log par zhus pas/ bka’ bkyon byung ste bya ba rnams ’bring tsam du bzhugs pa la/*

Disciples

> Lama Don grub dpal bzang po[1303] led many disciples [on the paths of] maturation and liberation. In particular, there came many individuals who were illuminated by the hundred lightrays of his experience and realization, such as Chos sGo ba Chos dpal shes rab, rTa rna Rinpoche Blo gros rgyal mtshan, Shākya rgyal mtshan, the powerful yogi Ā Hūm Vajra, rTogs ldan Sangs rgyas ’byung gnas, the Omniscient Yog pa gu ru and others.

Don grub dpal is said to have led many disciples on the paths of maturation and liberation, that is to say that he granted empowerments and instructions of the rNgog traditions. His most important disciple was his son, Byang chub dpal, who continued the family lineage, but he also had disciples who came from all of Tibet, including from gTsang to Khams. Several of his disciples later gave the transmission to Byang chub dpal. Such was the case of Ā Hūm Vajra, who also studied with Sangs rgyas yon tan and passed on the teaching to Byang chub dpal and later to his cousin bSod nams don grub.[1304] As Ā Hūm Vajra is said to have transmited perfection phase practices and to have been a powerful yogi, he must have been a meditationer in retreat in the valley who became an expert in the comtemplative tantric practices associated with the rNgog traditions while the abbots and monks specialized in tantric exegesis. Likewise, Chos sGo ba Chos dpal shes rab from gTsang, a follower of the Shangs pa bka’ brgyud school, received several transmissions from Don grub dpal that he later gave to Byang chub dpal.[1305]

3.4.8. rNgog Sangs rgyas yon tan (14th-15th c.)

> Lama Sangs rgyas yon tan received all rNgog cycles from his spiritual forefathers and died in his sixty-fourth year in a monkey year.[1306] He was adorned by the three trainings and gained mastery other many tantras, reading transmissions and key instructions. Having established disciples on the path of maturation and liberation, he departed again for the pure fields. [I] heard that a rainbow tent and many relics appeared on his remains.[1307]

The last biography in ST2 is that of Sangs rgyas yon tan, often also called Sang(s) yon, who was the son of Khrom rgyal ba, the youngest brother of Chos kyi rgyal mtshan. His lifestory is

---

[1303] ST2, 50: 1. See also ST3, 88-89; *lHo rong chos ’byung*, 63-64.

[1304] *Gong dkar gsan yig*, 420: the *Hevajra* and Mahāmāyā perfection phase lineages go from Sangs rgyas yon tan to Ā Hūm Vajra and on to bSod nams don grub. Ā Hūm Vajra is mentioned among Byang chub dpal’s masters in *lHo rong chos ’byung*, 64.

[1305] See his life-story in BA, 751-752. Some transmissions are mentioned in ZH4 *gSan yig*, 773 *(Saṃputa*); 786-787 (*Mahāmāya rgyud kyang*), 787 and 809 (*Catuṣpīṭha*); 790 (*gSang ba’i spyi’i rgyud*); 807 (Mar pa’s Tradition of *Guhyasamāja* via mTshur ston), and 810 (reading transmission of *Mahāmāyā*). Chos sgo ba also held Sa skya lineages, as evidenced in the *Gong dkar gsan yig*, 416.

[1306] *lHo rong chos ’byung*, 64.

[1307] ST2, 45.4-5.

also included in the *lHo rong chos 'byung*, but not in ST3. He was born on a snake year and died in a monkey year 63 years later, but none of the texts provide the associated element. He and Don grub dpal may have lived approximately at the same period, as the two often share the same master (their uncle Chos kyi rgyal mtshan) and disciples (Byang chub dpal and Ā Hūm Vajra).

It is likely that Sangs rgyas yon tan's and his brother Sangs rin's parents, Khrom rgyal ba and his wife, settled in a new house in the gZhung valley, where a temple was erected and where his branch of the family remained as Sangs yon's nephew, Rin chen dpal bzang po, composed several commentaries in a place called Brag dmar chos 'khor gling.[1308] The name of this house is not completely clear but as Sangs rgyas yon tan is referred to as "Bla ma sNang rab" in a history of Zul phu[1309] and Rin chen dpal bzang po is called "Chos rje sNa ra ba" in the biography of Kun dga' dpal 'byor,[1310] sNang rab (and less likely sNa rab or sNa ra ba) may be the name of the house. It is possible that it was situated in what is now the rNam rab village (see II.5.5).

Despite appearing as a minor master in the rNgog histories, which do not provide his record of teachings received (as they do for the sPre'u zhing abbots), Sangs rgyas yon tan received all the rNgog cycles and played an active role in the transmission of the rNgog tradition, as witnessed by his presence in the main rNgog pa lineage of the *Hevajra* empowerment in the KGND, between Chos rgyal and Byang chub dpal, and in the *Nāmasaṃgīti* lineage reaching Kun dga' grol mchog, Tāranātha and Kong sprul.[1311] Gong dkar ba Kun dga' rnam rgyal, who made use of Byang chub dpal's (today unavailable) record of teachings to compose his own, says he received the empowerments of the rNgog traditions from Byang chub dpal and the reading transmissions and explanations from Byang chub dpal's cousin bSod nams don grub.[1312] Among the latter, several lineages either passed from Chos kyi rgyal msthan to both Don grub dpal and Sangs rgyas yon tan, and these two to Byang chub dpal, or only through Sangs rgyas yon tan.[1313]

An abbatial history of Zul phu, the seminary where the rNgog were traditionally ordained, records that Sangs rgyas yon tan, called "rNgog pa'i Rin po che," gave the *Vajrabhairava* empowerment there in 1371.[1314] Later, he went to Zul phu to a gathering with many other

---

[1308] NKSB, 11: 204: *gzhung brag dmar dpal gyi chos 'khor gling.*

[1309] Sørensen 2007, 172.

[1310] KP *rnam thar*, 15-16: *rngog pa'i dge ba'i gshes gnyen chos rje sna rab ba dang mdom chung ba la sogs pa rnams kyi kyang shin tu dad par gyur nas chos kyi 'brel pa zhus thugs yid 'dres par gyur.*

[1311] KGNDdkar chag, 21, 36.

[1312] See the part on the rNgog tradition in *Gong dkar gsan yig*, 413-423, and more details in part II.4.

[1313] *Gong dkar gsan yig*, 415, 417: Byang chub dpal received explanations on *Hevajra* and Mahāmāyā from both Don grub dpal and Sangs rgyas seng ge. *Ibid*., 419-420: he received explanations on *gSang ldan* and *Saṃputa* only from Sangs gyas yon tan. *Ibid*., 420: Sangs rgyas yon tan also explained the perfection phase practices of *Hevajra* (*bSe 'pho*) and *Mahāmāyā* to Ā Hūm Vajra, who gave them to bSod nams don grub.

[1314] Sørensen 2007, 172: *rngog pa'i rin po che sangs rgyas yon tan gyis 'jigs byed kyi dbang zhus.* […] *rngog sprel zhing gi rin po che don grub dpal/ bla ma snang rab sangs rgyas yon tan/ tshul khang pa ste/ rngog pa'i gdung brgyud kha gsum/*

spiritual friends of Central Tibet, accompanied by two other representatives of the rNgog family: the "rinpoche of rNgog sPrel zhing," presumably Don grub dpal, and another representative of the rNgog tradition, Tshul gang pa. The latter's identity is not certain, but it probably refers to the monk from the monastery of sPre'u zhing who gave the *Catuṣpīṭha* transmission to Byang chub dpal.[1315] Kong sprul calls him Rig 'dzin Tshul khrims mgon po; he is part of the *Catuṣpīṭha* Yum bka' transmission that rGyal tsha Ra mo gave to sNgo tsha chos sku.[1316]

The author of ST2, presumably Byang chub dpal, says that he heard of the miraculous signs that appeared when Sangs rgyas yon tan died, such as rainbow lights and relics appearing on his body. One can note that such remarks are not very common in the *Rosaries*, which generally do not give much extraordinary depictions. There are none for instance for Don grub dpal, though Chos kyi rgyal mtshan too is credited with some miraculous visions and accomplishments.

rNgog Rin chen dpal bzang po (15th c.)

The name of Rin chen dpal bzang po only figures in ST2 as one of the two sons of Sang rin, and the nephew of Sangs rgyas yon tan. In the lineage of *Hevajra* nine-deity in the *gSan yig* of the 5th Dalai Lama,[1317] Rin chen dpal bzang po appears between Byang chub dpal and his grandson Byang chub dpal grub, who was sPre'u zhing's abbot in 1476.[1318] He was still active after the death of Byang chub dpal as he is mentioned in Padma dkar po's *Religious History* as being among the rNgog heirs who took part in the funeral of Byang chub dpal and bequeathed to Kun dga' dpal 'byor some of the rNgog's heirloom.[1319] He may therefore have been born at the turn of the 15th century.

Nothing more than his name is provided in ST2, but several of his works are preserved in vols. 10 and 11 of the NKSB. These texts were not included in the DC and NKCK but figure in the Potala Catalog. As explained in part I.1.4.1, some of the volumes contained in the gNas bcu lha khang were moved to the Potala at the beginning of the 20th century, and this bundle must have been among them. The NKSB editors wrongly attribute these texts to Rin chen bzang po (1243-1319), sPre'u zhing's third abbot, but in several colophons, Rin chen *dpal* bzang po states that he composed these texts in Brag dmar chos 'khor gling,[1320] and not sPre'u

---

[1315] BA, 412 (*Deb sngon*, 498): "By order of the great tsong kha pa who said: "You should at any rate preach (i.e. obtain the permission or lung) of the gdan bzhi", he obtained the permission to read the gdan bzhi from an old monk named the ācārya tshul mgon pa who was an inmate of spre'u zhing gling."

[1316] KGNDdkar chag, 32.: […] rngog *chos sku rdo rje / rngog zhe sdang rdo rje/ rngog rgyal tsha ra mo/ sngo (<rngog) tsha chos sku/ sngo (<rngog) tsha dkon mchog dpal/ dran ston mtha' bral/ dran ston shes rab bzang po/ grub chen man lung gu ru/ man lung kun mkhyen/ 'dzam gling sangs rgyas rdo rje/ rig 'dzin tshul khrims mgon po/ rngog ston byang chub dpal ba.* See also *Gong dkar gsan yig*, 414, where he is called *rig pa 'dzin pa tshul mgon.*

[1317] DL5 *thob yig*, 2: 192b5-193a2.

[1318] BA, 413-414 (*Deb sngon*, 499)

[1319] *Pad dkar chos 'byung*, 15-16. See part II.5. for more details on gZhung after the disappearance of Byang chub dpal.

[1320] NKCB, 10: 292; 11: 70, 111, 118, 204, 240.

zhing. This points to a separation in the family between Seng ge ’bum’s sons, led by Don grub dpal who took the sPre’u zhing abbacy, and Khrom rgyal ba’s sons Sangs rgyas yon tan and Sang rin, who settled in Brag dmar. The links between the two lines of the family were maintained as Rin chen dpal bzang po wrote one of the texts in the “great seat of the venerable Mar rNgog,”[1321] presumably sPre’u zhing, where the relics of Mar pa and the rNgog were held. He also passed some of the teaching between his uncle Byang chub dpal and his descendants, especially sPre’u zhing abbot Byang chub dpal grub.

[1321] NKSB, 11: 133: *rngog gzhung pa rin chen dpal bzang pos/ rje btsun mar rngog gi gdan sa chen por bsdebs pa’o.*

CHAPTER FOUR: Byang chub dpal (1360-1446)

> Lama Don grub dpal had a single son with his wife dKar khrom, Lama Byang chub dpal, who was born in 1360. [Byang chub dpal] studied with his father and with Sangs yon pa, rGya ston, Ā Huṁ Vajra and others all the rNgog cycles of teaching without exception until they penetrated his mind. His life and activity flourished, and he was blessed with remaining a long time: it is said that Lord Mar pa had blessed the rNgog seat during seven generations, and the lama was that seventh. After the death of Lama [Don grub dpal] in 1386 [1398?], he held the seat for 40 years and made one-pointed retreats. Lord [Tsong kha pa] Blo bzang grags pa and *sPyan snga* Chos rje [Rlangs lHa gzigs ras pa] invested him with the responsibility to teach the bKa' brgyud [doctrine], and the rNgog dharma cycles spread again during the second part of the lama's life. He one-pointedly meditated at the hermitage of gZhung ri bo, in the retreat center [located] where Chos rdor had departed from Khecara. He gave many profound and vast teachings to most of the great men, family lineage holders and spiritual friends of Eastern and Central [Tibet]. He died on the 7th of May 1446 (the second day of the fourth month of the fire male tiger year), in his 87th year. His remains were embalmed in a precious reliquary.[1322]

rNgog Byang chub dpal was the son of Don grub dpal. He played a very important role in the rNgog pa lineage at a crucial time in the history of Central Tibet. As argued in Chapter I.3., he was a skilled player in a world that was becoming more complex. He managed to gather together the spiritual capital of his ancestors and complement it with most of Mar pa's esoteric transmissions extant at the time. He skillfully made use of the social capital of Central Tibet, where his religious wealth was highly considered and probably managed to translate it in abundant economic capital. This contributed to the transfer of most of his knowledge and assets to other hierarchs and orders, which eventually contributed to the continuation of rNgog lineage until today, although he was the last of the rNgog to have an actual symbolic power.

[1322] *lHo rong chos 'byung*, 64-65: *bla ma don grub dpal gyis yum dkar khrom khab tu bzhes pa la sras bla ma byang chub dpal gcig pu lcags pho byi ba'i lo la sku 'khrungs/ de yang yab dang/ sangs yon pa dang/ rgya ston/ a hūṁ badzra sogs las rngog pa'i chos skor thams cad lhag ma med par gsan nas thugs rgyud la mnga' bar mdzad cing/ sku tshe dang 'phrin las dar zhing yun ring du gnas par byin gyis brlabs nas rje mar pas rngog gi gdan sa mi rabs bdun du byin gyis brlabs zhes pa'i bdun tshigs ni bla ma 'di yin/ bla ma gshegs rjes me stag lo nas gdan sar lo bzhi bcu tsam bzhugs/ thugs dam rtse gcig tu mdzad cing/ rje blo bzang grags pa dang/ spyan snga chos rje gnyis kyis bka' brgyud kyi bstan pa'i khur khyer ba'i zhal skyong mdzad nas/ rngog pa'i chos skor slar yang bla ma 'di'i sku smad la dar bar byung ngo/ nyid chos rdor mkha' spyod du bzhud pa'i sgrub khang gzhung ri bo dben tsa ru thugs dam rtse gcig tu mdzad cing/ mdo dbus kyi mi chen gdung rgyud dge ba'i bshes gnyen phal cher la zab la rgya che ba'i chos mang du gsungs/ dgung lo brgyad cu rtsa bdun me pho stag lo zla ba bzhi pa'i tshes gnyis la gshegs pa'i sku gdung ni rin po che'i gdung khang du ril por bzhugs so/*

As none of the *Rosaries* contain the life-story of Byang chub dpal, the sources for this chapter are the historical writings of several of his disciples coupled with remarks in disciples' biographies. The two main historical narratives are the above-quoted account of *lHo rong chos 'byung* and 'Gos Lo tsā ba's *Deb ther sngon po*.[1323] Although the former was composed thirty years before the latter, they do not seem to rely on each other. The information they contain was the starting point for the exploration of the life-stories of Byang chub pal's disciples. There is also a growing body of secondary literature dealing with the intertwined political, religious and cultural landscape of dBus gTsang in the 15th century, and especially the part of dBus that constitutes lHo ka, which is to say the southern bank of the gTsang po, from the Yar lung valley to the Gong dkar district. Relevant for this section are Franz-Karl Ehrhard's studies of two of the luminaries of the time, Lo chen bSod nams rgya mtsho and the 4th Zhwa dmar,[1324] and Klaus-Dieter Mathes on 'Gos Lo tsā ba.[1325] While these deal with the religious aspect of the period, Olaf Czaja in Leipzig devoted considerable attention to the history of the Phag mo gru pa Dynasty,[1326] while Mathias Fermer (in Hamburg and then Wien) considered the other regional power of the time, the Yar rgyab family and its rule in the Grwa, Dol, gZhung and Gong dkar valleys.[1327] The latter, in particular, generously shared with me many references. His forthcoming dissertation on the formation and influence of Sa skya monastic communities in the region will certainly provide much needed data on this crucial period in Tibet's history.

4.1. The seven generations

There are two widespread groupings used to label the rNgog lineage, the "seven maṇḍalas" and the "seven generations."[1328] As far as the latter is concerned, the biography of the second 'Brug chen Kun dga' dpal 'byor, among many others, refers to rNgog Byang chub dpal as "the last of seven generations of rNgog jewels."[1329] It is not clear at which point the expression was standardized, but it may be in the 15th century, as the *lHo rong chos 'byung* is the first to clearly name Byang chub dpal as the seventh generation on the rNgog seat blessed by Lord Mar pa (see quote above).

[1323] *Deb sngon*, 496-498 (BA, 411-413).

[1324] Ehrhard 2002a and 2002b.

[1325] Mathes 2007.

[1326] Czaja 2013.

[1327] Fermer 2009 and Fermer 2017.

[1328] See section I.3. for the seven maṇḍalas.

[1329] KP *rNam thar*, 15: *rngog pa'i rin chen bdun brgyud kyi tha ma rin po che byang chub dpal ba*. This expression also appears in the biography of Lo chen bSod nams rgya mtsho in the *Deb sngon*, 948: *rngog bdun rgyud kyi tha ma rngog byang chub dpal ba*. Other examples are *Rosary of Crystal Gems*, 1:71: *bdun brgyud tshun la rdor dril 'dzin shes pas chog pa kho na byung zhing chos brgyud da lta'i bar du kun la khyab pa 'di'o*; Shes rab rgya mtsho, 830: *rngog gdung brgyud bdun pa spre'u zhing rin po che byang chub dpal ba*; Gong dkar ba rnam thar, 78: *yang rje btsun mar pa lo tsā'i brgyud 'dzin rnams kyi nang nas mchog tu gyur pa rngog bdun brgyud kyi tha ma byang chub dpal ba'i bka' drin las rngog lugs kyi rim pa gsan pa la*.

This expression does not figure as such in the *Rosaries*, but in the part on the disciples, the prediction by Nāropa that he would bless Mar pa's lineage for seven generations is quoted.[1330] One can note as well that in both cases, there are only seven members of the rNgog clan named in the "Dharma lineage," starting with Chos rdor and with alternatively Rin chen rgyal mtshan or Don grub dpal as the seventh.[1331] Similar declarations are found in other sources. Mi bskyod rdo rje, a disciple of Byang chub dpal who redacted a biography of Mar pa a few years after Byang chub dpal's death, states for instance that the Venerable Nāropa predicted that for seven or thirteen generations, starting with mDo sde, the rNgog would all know how to hold a vajra and bell in their hands and would be blessed by Nāropa.[1332] The probable origin of this expression is a biography of Mar pa tentatively attributed to rNgog mDo sde, which states:

> [Nāropa says:] when you, Lo-tstsha-ba, will transfer, I will come with many *ḍākinī*s, and will lead you to Khecara. […] Your disciples and their disciples will go to Khecara for thirteen generations.[1333]

Thus, according to this prediction by Nāropa, seven or thirteen generations of Mar pa's disciples are set apart but the identities of the generations are not explicit. They are either blessed by Nāropa, able to hold a vajra and bell (that is to say to practice or transmit tantric practices), or go the Khecara. As far as the latter is concerned, although Chos rdor is considered to have left for the tantric paradise without leaving his body behind,[1334] none of the other rNgog achieved such a feat, and later declaration are understandably less emphatic. Although these expressions were known before the 15th century, they are not used to refer to someone who would be the last one, but to imply that the rNgog, as Mar pa's disciples, are blessed by Nāropa, or particularly able. The first individual to be considered the seventh and last rNgog is Byang chub dpal.

If we try to identify the seven generations in post-15th century contexts (as, perhaps, the authors of these texts did), it can be considered that the seven refer to mDo sde followed by the five sPre'u zhing abbots, (Kun dga' rdo rje, gZi brjid grags pa, Rin chen bzang po, Chos kyi rgyal mtshan, and Don grub dpal), and Byang chub dpal as the seventh. This counting excludes other important masters of the lineage, such as Chos rdor and Thogs med grags, as well as members of parallel lines, such as rGyal tsha Ra mo and rDor seng for the rGyal tsha, and Rin chen rgyal mtshan and Sangs rgyas yon tan for the gTsang tsha. It is likely that the

---

[1330] ST1, 23.4; ST2, 49.2: *khyod kyi bgryud pa bdun tshun chad du/ byin gyi brlob pa la nga rang gis 'ong ba yin.*

[1331] ST1, 7; ST2, 32: Chos kyi rdo rje, mDo sde, Kun dga' rdo rje, gZi brjid grags pa, Rin chen bzang po, Chos rgyal ba, Rin chen rgyal mtshan in ST1 but Don grub dpal in ST2.

[1332] MPSB, 163: *rngog mdo sde nas bzung ste mi rabs bdun nam bcu gsum gyi bar du / lag tur do rje dril bu 'dzin shes pa cig pus chog/ dbang bskur zhing byin gyis brlob pa dang/ bar chad sel ba la nga dang gnas gsum gyi mkha' 'gro rnams mi yong ri zhes dbus sna (<dbu mna') mdzad pa yin pas/*

[1333] Ducher 2017, 289: this quote is in the translation of the biography of Mar pa attributed to rNgog mDo sde that is in DK-DZO, 5: 183.

[1334] For a traditional explanation of Khecara, see Kongtrül & Barron 2011, 345-347.

expression gained currency because of the parallel with the seven maṇḍalas, the two becoming widespread only in the 15th century.

4.2. Education

Byang chub dpal was born in 1360, one year after the death of his great-uncle Chos kyi rgyal mtshan and the start of his father Don grub dpal's abbacy in sPre'u zhing. His name is given as either Byang chub dpal, Byang chub dpal ba or Byang chub dpal bzang; in all likelihood, he is also the Bodhiśrī who authored ST2. In his youth, he extensively studied the rNgog cycles with his father and his uncle, Sangs rgyas yon tan. Although the former is the one that figures in most lineages, the latter is present in the lineage of *Hevajra* Nine Deities and *Nāmasaṃgīti* and seems to be the leading character in the gZhung valley at that time.[1335] Byang chub dpal also studied practices associated with the phase of perfection with the yogi Ā Huṁ Vajra, who had received Don grub dpal's transmission[1336] and attended Tshul khrims mgon po, a monk in sPre'u zhing Monastery who held the transmission of Jñāneśvari, the female form of *Catuṣpīṭha*, said to be incomplete in the family lineage.[1337] In the record of teachings received by the 4th Zhwa dmar, several other masters appear before Byang chub dpal. There is for instance Chos rje Grags pa don grub, the 16th abbot of sNar thang. He was a disciple of mKhan chen Grags pa rdo rje, who himself studied with Chos sgo ba Chos dpal shes rab, who is said to have received transmissions from Don grub dpal.[1338]

All in all, Byang chub dpal made special efforts to receive all the transmissions that had become representative of the Mar rNgog tradition and weave together the threads that became loose over the years, sometimes receiving several times and from several persons the empowerments, reading transmissions and key instructions for each of the rNgog cycles. He also received some of Mar pa's teachings that were not among the rNgog's legacy until that time, such as Mar pa's tradition of *Guhyasamāja* and the *Sras mkhar ma*, a collection of fifteen scrolls expounding Mar pa's core instructions revealed in the 13th century by Guru Chos dbang.[1339] Although the expression "seven maṇḍalas of the rNgog" (*rngog dkyil bdun*)

[1335] ZH4 *gSan yig*, 807; KGNDdkar chag, 21 (*yab*) & 23 (*yum*): In the record of lineages of the 4th Zhwa dmar as in the KGND, Don grub dpal is associated with Hevajra yum bka' (Nairātmyā) and Sangs rgyas yon tan with Hevajra Yab bka' (male form). See also ZH4 *gSan yig*, 786, the Mahāmāyā lineage goes from Sangs yon to Ā Huṁ Vajra and Byang chub dpal; 801: the lineage of *Nāmasaṃgīti* goes from Chos kyi rgyal mtshan to Don grub dpal and Sangs rgyas yon tan, and from them to Byang chub dpal. 808: reading transmission of mDo sde's commentary on the *Saṃputatantra* goes from Chos kyi rgyal mtshan to Sangs rgyas yon tan and Ā Huṁ Vajra, and from them to Byang chub dpal.

[1336] From him, Byang chub dpal especially received instructions on the perfection phase (*bSre 'pho*) and reading transmission and key instructions on practices associated with Mahāmāyā, see ZH4 *gSan yig*, 808 & 811

[1337] BA, 412 (*Deb sngon*, 498); KGNDdkar chag, 32; ZH4 *gSan yig*, 809. See section II.3.4.7. on Don grub dpal.

[1338] ZH4 *gSan yig*, 773 (*Saṃputa*); 786-787 (*Mahāmāya rgyud kyang*); 787 and 809 (*Catuṣpīṭha*); 790 (*gSang ba'i spyi'i rgyud*); 807 (Mar pa's Tradition of *Guhyasamāja* via mTshur ston); 810 (reading transmission of *Mahāmāyā*);

[1339] See Ducher 2016a for details. Byang chub dpal received this transmission from mKhan chen Seng ge dpal (ZH4 *gSan yig*, 812; DL5 *thob yig*, 2: 302–303). In the biography of 'Gos Lo tsā ba (ZH4 *gSung 'bum*, 1: 490), this mKhan po is called dGe 'dun sgang pa'i mKhan chen Seng ge dpal ba. In 1425, 'Gos Lo tsā ba receives Byang chub dpal's teachings together with him.

was not standardized until the end of the 15th century, he certainly was instrumental in reshaping and rebuilding a recognizable rNgog tradition that could from that time onwards be transmitted as a collection rather than as individual tantras. In this way, Byang chub dpal labored to bring together the rNgog traditions and Mar pa's legacy, thus appearing as the legitimate holder of the Mar rngog bka' brgyud lineage and continuing the endeavor started by his ancestor, rNgog mDo sde.

According to Mi bskyod rdo rje, one of his students, Byang chub dpal's disciples considered him to be an emanation of Mar pa, something that he acknowledged as well.[1340] He is said to have had a vision of Mañjuśrī according to the *gSang ldan* tradition when he was thirteen and to have reached the capacity to perceive that he was inseparable from the deity. Similarly, Mi bskyod rdo rje asserts that he saw the deities of the *Hevajra* maṇḍala when consecrating statues of his predecessors, and those of *Catuṣpīṭha* when giving explanations of that tantra.[1341] He adds that when his master died, there were numerous miraculous events, such as a rain of flowers and so on.[1342]

4.3. Abbacy

Byang chub dpal was the only son of Don grub dpal. He succeeded him as sPre'u zhing abbot after his father's death, in either 1386 or 1398. According to the *lHo rong chos 'byung*, Byang chub dpal stayed in retreat much of his life in a site on the slopes opposite the sPre'u zhing temple, which is considered to be the location from which Chos rdor originally departed for Khecara. 'Gos Lo tsā ba states that Byang chub dpal was holding yearly transmissions and marked his copy of the *Hevajratantra* commentary each time he was teaching it: 'Gos Lo tsā ba saw the volume, known as "[Marked] by the Vajra" with 182 such marks.[1343] Unlike many of his ancestors and later hierarchs such as the 4th Zhwa dmar who travelled incessantly, Byang chub dpal is not said to travel much, and most of his disciples came to meet him in sPre'u zhing. This may be because he mostly stayed in retreat, and also because the gZhung valley was located in a central yet quiet place, with easy funding from local rulers.

Byang chub dpal was not ordained and had two sons, Rin chen rdo rje and bKra shis dpal grub.[1344] According to the account given by 'Gos Lo tsā ba,[1345] bKra shis dpal grub (also called bKra shi dpal ba) became a monk as a child and went to study with the Prevost (*chen*

[1340] MPSB, 1: 163.

[1341] MPSB, 1: 162.

[1342] MPSB, 1: 163.

[1343] *Deb sngon*, 497: *brtag gnyis kyi gzhung rdo rje mar grags pa*. Modern accounts of the gZhung valley today state that since sPre'u zhing is under the care of Gong dkar chos sde, there is the custom of annual public empowerments in sPre'u zhing during the first Tibetan month (*spre'u zhing mi dbang*). The custom may come from this tradition that existed already at Byang chub dpal's time.

[1344] ST2, 31 and *lHo rong chos 'byung*, 65, says they are *sras*; *Deb sngon*, 499 states that bKra shis dpal ba was born "in the family of Rinpoche Byang chub dpal" (*rin po che byang chub dpal ba nyid kyi gdung du 'khrungs*). The name of the wife of Byang chub dpal is not known.

[1345] *Deb sngon*, 499*;* BA, 413.

po) Blo gros ’phel ba from rTses thang Monastery,[1346] in particular Buddhist logic. He then received all the rNgog traditions from his father and became very learned. As Byang chub dpal had a long life, bKra shis dpal grub did not teach outer students. He became sPre’u zhing’s abbot during the life of his father, possibly in 1426.[1347]

4.4. From adversity to success in the power hub of Central Tibet

The gZhung valley is located in Central Tibet, in a valley to the south of the gTsang po, near the main roads going to gTsang and to lHa sa, inbetween two valleys (Gong dkar and Dol) inhabited at that period by the powerful lords of the Yar rgyab family, and not very far from the Yar rlungs Valley, from where the Phag mo gru pa dynasty had ruled much of Central Tibet since the mid-14th century. This was the power hub of Tibet at that time.[1348] Despite that situation, Byang chub dpal was not very successful in the early part of his life. The *Deb ther sngon po* explains that he suffered from political problems due to the fact that certain individuals had slandered him to “bDag po Drung chen pa.”[1349] The reason for his bad reputation is not clarified; as mentioned above, it is possible that sPre’u zhing had waned during the time of Don grub dpal and had lost its tantric specificity and appeal. As the term used for the person who hindered Byang chub dpal’s activity is a title (*bdag po* is a “lord” and *drung chen* is a “great secretary”) it is difficult to ascertain who is referred to, but it is likely that the term points to someone having a powerful function in the Phag mo gru pa regime. A possible candidate is Drung chen Nam mkha’ bzang po, the second district officer (*rdzong dpon*) of sNe’u gdong from circa 1400 to 1430 and an important patron of Tsong kha pa.[1350] Another, even more likely, possibility is Drung chen bZhi ’dzom (1372/73-1446), the first district officer of Gong dkar and member of the Yar rgyab family. As the Gong dkar officer, he ruled over the gZhung valley, and he too was a patron of Tsong kha pa involved in the

---

[1346] Czaja 2013, 1: 211, n. 16: the place where bkra shis dpal grub studied may be the lNga mchod grwa tshang in rTsed thang, founded by the ‘prevost’ of the Northern post, Blo gros ’phel ba, who was a disciple of rTsong kha pa.

[1347] *lHo rong chos ’byung*, 65, says that Byang chub dpal remained on the throne forty years after the death of the “lama” in the tiger fire year. If the lama in question is Don grub dpal, and the tiger fire year 1386 (and not 1446, year of composition of the *lHo rong chos ’byung*), it means that Byang chub dpal was sPre’u zhing’s abbot from 1386 to 1426, and his son bKras shis dpal grub succeeded him in 1426.

[1348] Czaja 2013; Fermer 2017.

[1349] *Deb sngon*, 496-497: *don grub dpal ba gshegs rjes gdan sa gzung zhing dus chos [= mchod?] ma chag par gsungs pa la/ log sgrub can gyi gang zag ’ga’ res/ bdag po drung chen pa la log par zhus pas/ bka’ bkyon byung ste bya ba rnams ’bring tsam du bzhugs pa la/ rje tsong kha pa chen po grum bu lung du chos gsung ba’i tshe mjal du byon pas/ rjes bkur sti chen po mdzad/ mkhyen pa’i yon tan rnams la rtsad gcod gnang/ der ngo mtshar che ba’i gsung yang yang bzlas pa mdzad cing/ phyis kyang bsngags pa mang du mdzad pas sde snod ’dzin pa chen po rnams kyang yid lhongs te.* (BA, 411-412): “[Byang chub dpal] held the seat after the death of Don grub dpal pa and gave uninterruptedly seasonal teachings. Some wrongdoers slandered him to Lord drung chen pa (*bdag po drung chen pa*) so that he was blamed and his actions were only mildly effective. He went to meet Lord Tsong kha pa the Great when the latter was preaching at Grum bu lung and the Lord showed him great respect: he probed the quality of his knowledge and repeatedly expressed his great amazement at it. Later, thanks to these numerous praises, the great Basket Holders Tripiṭakadharas also admired him.” (my translation)

[1350] Drung chen Nam mkha’ bzang po funded the construction of ’Bras spungs and sponsored the printing of Tsong kha pa’s works. See Jackson 1990, 109-110; Sørensen and Hazod 2007, 49-52; Czaja 2013, 209-210.

early printing of his complete works.[1351] Thus, although the reason for the trouble is not alluded to, it is possible that Byang chub dpal's fall from grace was due to some tension that may have appeared between the rNgog heir and the powerful founder of the dGe lugs pa order.

Whatever the reason, the life-turning moment in the life of Byang chub dpal is described by 'Gos Lo tsā ba: in 1408, Byang chub dpal went to Grum bu lung, to the south-east of Lha sa, where Tsong kha pa had been invited by the Phag mo gru pa ruler Grags pa rgyal mtshan (1374-1432, r. 1385).[1352] Tsong kha pa taught *yoginitantras* during a few months and planned the sMon lam Chen mo that would be held during the New Year festivities of 1409. Byang chub dpal had long discussions with Tsong kha pa, though the two hierarchs are not recorded as receiving transmission from each other.[1353] Tsong kha pa was very impressed by Byang chub dpal's knowledge and repeatedly praised him.[1354]

After that date, the reputation of Byang chub dpal soared and he attracted many of the powerful figures of Central Tibet. Disciples of Tsong kha pa such as the first abbot of 'Bras spungs 'Jams dbyang chos rje bKra shis dpal ldan (1379-1449),[1355] bDe mo thang pa Blo gros rgyal mtshan (1392-1470),[1356] gTsang chung Chos grags rgya mtsho[1357] and others attended him. Masters of other lineages such as mKhan chen Padma bzang po[1358] and the second abbot

---

[1351] Fermer 2017, 70-74, especially n. 24. According to Fermer, he can be considered one of the most powerful men in Central Tibet at that time.

[1352] See an account of this meeting in the *bKa' gdams gsar rnying chos'byung*, 49, by the 15th dGa' ldan khri pa, bSod nams grags pa (1478-1554) and in the *bKa' gdams chos 'byung gsal ba'i me long*, 436, by Las chen Kun dga' rgyal mtshan (1432-1506). *gZhung pa rngog pa'i gdung brgyud rin po che byang chub dpal* is mentioned in the latter. Drung chen Nam mkha' bzang po is said to be present at that meeting and provided the financial support for the 1409 sMon lam chen mo.

[1353] Byang chub dpal is not mentioned in Tsong kha pa's *gsan yig* (*gSung'bum*, 1: 185-230). Tsong kha pa held several lineages coming from the rNgog, such as *Catuṣpīṭha*, *Nāmasaṃgīti* Mahāmāyā (*gSung'bum*, 1: 202; 213; 223 respectively), but they went out of the rNgog lineage early and he is not said to receive them again from Byang chub dpal although it is likely that this was the subject of their conversations. Tsong kha pa is also not mentioned among Byang chub dpal's teacher. One finds the name of Byang chub dpal and his cousin Rin chen dpal bzang po in a listing of Tsong kha pa's students, see Thuken 2009, 269: "The two descendants of the one who reached the ḍākinī realm were the Treshing trulku Jangchup Palwa and Rinchen Palwa."

[1354] *Deb sngon*, 497; *bKa' gdams chos 'byung gsal ba'i me long*, 436: 3-4.

[1355] TBRC P35; http://www.treasuryoflives.org/biographies/view/Tashi-Pelden/5849. The above-mentioned Drung chen Nam mkha' bzang po sponsored the founding of 'Bras spungs in 1416.

[1356] TBRC P429. bDe mo thang pa Blo gros rgyal mtshan founded a monastery near lHa sa and especially received *Dud sol ma* from Byang chub dpal. See A khu ching, 832: *sems dpa' chen po bde mo thang pa blo gros rgyal mtshan gyis kyang gzhung du chos rje rin po che byang chub dpal ba las rngog pa'i chos skor mang du gsan zhing bka' srung dud sol lha mo yang blangs zhes rnam thar las 'byung*.

[1357] Sansg rgyas rgya mtsho 1989, 77: gTsang chung Chos grags rgya mtsho was a disciple of the 5th dGa' ldan khri pa, dPal ldan chos skyong (1389–1463), and a scholar of astronomy (http://www.tibet-encyclopaedia.de/phugpa.html).

[1358] TBRC P9795. According to a lineage record of the *gDams ngag mdzod*, Padma bzang po was a major figure in the transmission lineage of mahāmudrā in the 'Ba' ra ba bKa' brgyud (Source: TBRC).

of ’Phen po Nā lendra, Dwags po bKra shis rnam rgyal (1398-1458),[1359] also received teachings from him.

4.5. The royal court, ’Gos Lo tsā ba, and Lo chen bSod nams rgya mstho

The Rlangs lha gzigs family

With this turn of event and the support of his disciple ’Gos Lo tsā ba, Byang chub dpal gradually entered the Phag mo gru circle and established religious links with lamas and lords of the Rlangs Lha gzigs family. One of his disciple was *sPyan snga* bSod nams rgyal mtshan (1386-1434), the influential 12th abbot of gDan sa mthil Monastery and the brother of the Phag mo gru pa ruler Grags pa rgyal mtshan, who encouraged him to teach more widely.[1360] bSod nams rgyal mtshan was the uncle of Grags pa ’byung gnas (1414-1445). After the death of the ruler Grags pa rgyal mtshan in 1432, there was a struggle between Grags pa ’byung gnas and his father Che sa Sangs rgyas rgyal mtshan (1389-1457), who was also bSod nams rgyal mtshan’s brother. bSod nams rgyal mtshan backed his nephew, but Grags pa ’byung gnas faced some difficulties establishing his rule after his uncle’s death in 1434. He finally asserted his power over sNe’u gdong rtse and became a sponsor of many religious leaders,[1361] including Byang chub dpal, who was invited to the court in 1441.[1362] Grags pa ’byung gnas’s father was sent into exile in Yar rgyab, where he also received transmissions from Byang chub dpal.[1363]

[1359] Karma ’Phrin la pa’s *bkra shis rnam rgyal gyi rnam thar*, p. 273-274: *rngog byang chub dpal ba la dkyil ’khor bdun gyi dbang/ ma rgyud gsum dang/ mtshan brjod rnams cha lag dang bcas pa’i bshad pa/ rgyud sde rnams kyi rdzogs pa’i rim pa mang dag dang/ bka’ bsrungs dud sol gyi chos skor tshang ba la sogs pa/ rngog pa la [274] grags pa’i thun mong ma yin pa’i chos ’khor dag bum pa gang byo’i tshul du gsan zhing/ shog dril rnams la sogs pa mar pa’i zab chos gzhan yang mang du gsan/ zhang gi bka’ ’bum dang / bka’ rgya ma la sogs pa tshal pa la grags pa’i chos skor mtha’ dag dang/ gsang ba snying po la sogs pa rnying ma’i chos skor ’ga’ zhig dang/ rgyud pa gzhan las byung ba’i bsgrub thabs las rim man ngag la sogs pa mang du gsan nas thugs su chud par mdzad.*

[1360] *Deb sngon*, 497: *drung bsod nams rgyal mtshan*. A khu ching, 831: *spyan snga nyer gnyis pa lha gzigs ras pa drung bsod nams rgyal mtshan sogs mkhyen rab can gyi slob ma mang du ’dus*. See Ducher 2017, 122-123 for a presentation of bSod nams rgyal mtshan and his religious history, the *Mig ’byed ’od stong* (Text A in Sørensen 2007). In the *Mig ’byed ’od stong* (Sørensen 2007, 103), bSod nams rgyal mtshan declares that writings of the rNgog lineage figure among his sources: *rngog chos rdor nas brgyud pa’i gsung sgros* […] See his biography in Czaja 2013, 214-215, n. 24 and BA, 589-595.

[1361] See Czaja 2013, 218-222 for an account of Grags pa ’byung gnas’ rule; See Ehrhard 2004, 249-251, for Vanaratna’s invitation to the court in 1433 and 1435; Heimbel 2014, 427-430, for Ngor chen’s invitation in 1441.

[1362] Ehrhard 2002b, 38 and Zh4 *gSung ’bum*, 283:

[1363] *Deb sngon*, 497, states that “Chos Sangs rgyas rgyal mtshan too received empowerments of the rNgog tradition.” BA, 412, translates this as “Che sa Sangs rgyas rgyal mtshan,” so it is likely that there is a spelling mistake in the 2002 Tibetan edition. Czaja 2013, 220-222, indicates that Sangs rgyas rgyal mtshan was led into exile in Yar rgyab after having been defeated by his son between 1435 and 1444. According to Akester 2016, 255, the place name “Yar rgyab” in historical literature of the mid-15th century refers to the Gong dkar/Gwra nang region, that is to say the valleys bordering that of gZhung where the Yar rgyab was ruling. It is possible that it was at this time that Sangs rgyas rgyal mtshan studied with Byang chub dpal, but no further detail is known about this meeting.

The biography of Lo chen bSod nams rgya mtsho, who was a brilliant young scholar protected by Grags pa ’byung gnas, describes the travel of Byang chub dpal to the Phag mo gru pa court:[1364]

> In his eighteenth year, [Lo chen Bsod nams rgya mtsho] learned [*Prajñā*]*paramitā* literature with ’Gos Lo tsā ba in sNa mo chos rdzong. Afterwards, while he was staying in Chos bar, emissaries from the Ruler’s palace came to invite him [to rTsed thang]. [Grags pa ’byung gnas’s message] said: “I invited rNgog Byang chub dpal and preparations are being made in order to receive the rNgog teachings. I want to request the empowerments for the seven maṇḍalas of the rNgog. As this Dharma-Lord is the last of the lineage of seven rNgog, I think it is very important if one can receive them from him, so I sent someone to call you.” [Lo chen] went, and received the empowerments while serving as the Ruler’s personal attendant. Afterwards, [Lo chen] said: “At that time, I had entered the *bla brang* as a young monk and my studies were in progress. To receive or not to receive the empowerments for the seven maṇḍalas did not depend on me; even though I had begun my studies, that very intention was really [a mark] of the affection the Ruler had for me!”

Thus, at seventeen, Lo chen received the empowerments for all rNgog maṇḍalas from Byang chub dpal. Although he is not said to have met Byang chub dpal later on, that transmission was significant for him and for the future of the rNgog pa teaching as it created a direct link between the old rNgog master and the young scholar. The latter then passed on the transmission to his disciple, the 4th Zhwa dmar. Lo chen further studied the rNgog traditions with ’Gos Lo tsā ba.

’Gos Lo tsā ba gZhon nu dpal

From the religious point of view, one of the most significant disciples of Byang chub dpal was ’Gos Lo tsā ba gZhon nu dpal. He spent many months in sPre’u zhing and extensively received the rNgog teachings, thus witnessing in person what he relates regarding the rNgog family in the *Deb ther sngon po*.

According to the biography of ’Gos Lo tsā ba composed by the 4th Zhwa dmar,[1365] ’Gos Lo tsā ba first did not know whether it would be better to receive the rNgog traditions from “the Rin po che himself,” that is to say from sPre’u zhing’s abbot Byang chub dpal, or from sNang

---

[1364] ZH4 *gSung’bum*, 1: 283: *dgung lo bcwa brgyad pa’i stengs su sna mo chos rdzong du rje ’gos lo tsa ba gzhon nu’i zhabs kyi drung du phar phyin gsan/ de’i rjes su chos bar la bzhugs thog/ dpon sa nas ’bod mi gnang byung bas/ thegs pa na/ rngog byang chub dpal ba spyan drangs/ rngog chos rnams gsan rtsis kyi grabs mal mdzad de/ nged rngog pa’i dkyil ’khor bdun po’i dbang zhu rtsis yin pa/ chos rje ’di rngog bdun brgyud kyi tha ma yin pas/ ’di la zhu thub na khyad che ba cig ’ong bsam/ khyod ’bod du btang ba yin gsung ba phebs te/ dpon sa’i zhabs phyir dbang rnams gsan/ phyis de’i ’phros gnang nas/ de dus btsun chung gi blar song/ slob gnyer byed du bcug chog ste bsam pa shar na’ang/ dpon sa de bdag la thugs brtse ba rang yin pas*. See *Ibid*, 1: 504 for ’Gos Lo tsā ba’s account of the event. ’Gos lo did not go to the court to receive the seven maṇḍalas from Byang chub dpal at that time.

[1365] Zh4 *gSung ’bum*, 1: 489-491 (Mathes 2007, 139). I summarize here the content of the transmissions and the stories about ’Gos lo and Byang chub dpal related by the 4th Zhwa dmar.

ra ba, that is to say his older cousin Sangs rgyas yon tan. A lama famous for his prediction told him to rely on Byang chub dpal, so he first spent some time in sPre'u zhing in 1424-1425, in the residence of the chant master called bKra shis dpal. Together with the mKhan chen of dGe 'dun sgang called Seng ge dpal, he received from Byang chub dpal a series of 53 teachings. They started with the empowerments of the three maṇḍalas related to the *Hevajratantra* (*Hevajra*, *Nairātmyā*, *Pañjara*). These were followed by teachings on the commentaries on *Hevajra* and *Pañjara*. Then, they received instructions on the six doctrines as they are practiced according to these tantras; fifteen texts in particular are mentioned, mostly available in either the MPSB or NKSB. This session on *Hevajra* was concluded by the study of four *sādhana*s. It was followed by the empowerment, exegesis and key instructions on *Mahāmāyā*, *Saṃputa*, *Catuṣpīṭha*, and *Nāmasaṃgīti* (see Chapter I.2 for details). Byang chub dpal then taught the bDe mchog snyan rgyud, together with the hagiographies ranging from the Wisdom Ḍākinī to rGya pho ba lung pa, as well as key-instructions related to that. It was followed by the transmissions of treasures discovered by Rin chen gling pa and several other instructions and empowerments. 'Gos lo stayed in sPre'u zhing until the spring of 1425, and then made a retreat in the dBu ra'i phug, with the financing of sTag rtse ba. He returned to sPre'u zhing several years later, in 1431.[1366] At that time, he once again received many teachings from Byang chub dpal, on *Nāmasaṃgīti* as well as on other cycles, both related and unrelated to the traditional rNgog traditions. Byang chub dpal gave reading transmissions of the *rGyud 'bum* several times. Although 'Gos Lo was worried that it may be too much for his teacher's health, Byang chub dpal said it was fine. He requested 'Gos Lo tsā ba to write his biography, but 'Gos Lo tsā ba replied that he was unable to do so and did not write an extensive account apart from the sketch in the *Deb ther sngon po*.[1367]

4.6. Passing on the legacy

In the last years of his life, Byang chub dpal offered the rNgog traditions to young hierarchs who became important figures in the religio-political scene of the late 15th century, and who spread the rNgog traditions in other lineages. Although the rNgog lineage had always been open to outer disciples, until then it had managed to keep Mar pa's legacy more or less intact within the family. For various reasons, however, the most significant lineages after Byang chub dpal were not the ones preserved in his family but those of his other disciples. Among these, one can mention the lineage that passed to 'Gos Lo tsā ba, Lo chen and then to the fourth Zhwa dmar, who in turn had a towering influence on many lamas of the early 16th century and played a great role in the diffusion of the rNgog tradition in the Karma, sTag lung and 'Bri gung bKa' brgyud orders. The second rGyal dbang 'brug pa similarly imported the rNgog traditions in the 'Brug pa order; the sTag lung abbot Ngag dbang grags pa further brought them into the sTag lung order; and Gong dkar Kun dga' rnam rgyal and his Yar rgyab family made a link with the Sa skya order and the continuity of the rNgog traditions in lHo ka. Thus, while the next chapter describes the end of Byang chub dpal family lineage, the present one clarifies the continuity of the rNgog religious lineage outside of the family. Eventually,

---

[1366] Zh4 *gSung 'bum*, 1: 495 (Mathes 2007, 140).

[1367] Zh4 *gSung 'bum*, 1: 495: *rin po che des thugs rjes shin du 'dzin pa'i stobs kyis khyed kyis bdag gi rnam thar cig cis kyang gyis gsung yang bdag gis ma nus pa yin gsung.*

all the loose threads of the rNgog traditions were gathered together again by Kong sprul in his 19th-century *bKa' brgyud sngags mdzod*.[1368]

4.6.1. Kun dga' dpal 'byor (1428-1476) and the 'Brug pa bka brgyud

Byang chub dpal's last disciple may have been Kun dga' dpal 'byor (1428-1476), who was recognized as the second rGyal dbang 'brug pa, the first being gTsang pa rgya ras (1161-1211). At that period of transition between family lineage and incarnation lineage, Kun dga' dpal 'byor embodied the two trends: he was on the one hand the heir of the rGya family ruling on Rwa lung monastery (he was the 13th abbot), and on the other hand the second incarnation of gTsang pa rgya ras—the founder of the 'Brug pa bka' brgyud lineage and of Rwa lung monastery as well as an ancestor of the rGya family.[1369]

According to Kun dga' dpal 'byor's biography, the young 'Brug chen met Byang chub dpal when he went to the gZhung valley in the spring of 1446.[1370] The old rNgog hierarch told him that he had been expecting him and that he was putting into his hand the responsibility of his teaching. He granted Kun dga' dpal 'byor the empowerments and key instructions for the rNgog maṇḍalas such as *Hevajra*, *Pañjara*, *Mahāmāyā*, *Catuṣpīṭha*, *Nāmasaṃgīti*, and other Mar pa traditions such as *Buddhakapāla*. Byang chub dpal further announced that he would soon die, and that he wanted Kun dga' dpal 'byor to head his funeral. Then, the young 'Brug chen went back to 'Brug but was summoned back in sPre'u zhing a month later as Byang chub dpal died on May 7, 1446, in his 87th year. The last will of Byang chub dpal was respected by his heirs (see section II.5.1) who bequeathed to Kun dga' dpal 'byor the "empowerment vase of the seven generations" (*bdun brgyud kyi dbang bum*) made of silver as well as Nāropa's bone ornaments, although these may have counted among their most cherished heirlooms. Nāropa's bone ornaments remain until now one of the main assets of the 'Brug pa lineage, exhibited by the rGyal dbang 'brug pa every twelve years.[1371]

As the rNgog biographical accounts stop before Byang chub dpal, it is difficult to know how the rNgog heirs reacted to the situation. In the 'Brug chen's biography, Kun dga' dpal 'byor is presented as Byang chub dpal's doctrine's holder (*chos bdag po*), and the presentation makes obvious that Byang chub dpal chose him as his successor. Despite this seemingly important transfer of power, only a few rNgog traditions were in effect transmitted within the 'Brug pa bka' brgyud lineage on the long term. In the KGND for instance, only the Cakrasaṃvara Vajrasattva 37 deities (*bde mchog zhi ba rdor sems lha so bdun pa*) lineage passes through

---

[1368] See section I.1. for Kong sprul's sources.

[1369] For summaries of his life in English see http://treasuryoflives.org/biographies/view/Drukchen-02-Kunga-Peljor/11986 (accessed on July 4, 2017) and Smith 2001, 81-82.

[1370] KP *rnam thar*, 15-16: it is stated that he was then in his 20th year, that is to say that it was in 1447. As reliable sources state that Byang chub dpal died in 1446, Kun dga' dpal 'byor may rather have been 18 (= in his 19th year). See another biography in *Pad dkar chos 'byung*, 609-618 (part on Byang chub dpal, p. 610-611); 'Phrin las rgya mtsho, 163.

[1371] The last time was in 2016. See e.g. http://www.naropa2016.org/about.php#Ornaments (accessed on July 4, 2017).

Kun dga' dpal 'byor, and it is not one of the seven maṇḍalas.[1372] Another example of Kun dga' dpal 'byor's somewhat ambiguous religious importance is that of gTsang chen Chos rje from Zhwa lu.[1373] That yogin had settled in Tsā ri, an important pilgrimage place for the bKa' brgyud schools, especially the 'Bri gung pa and 'Brug pa, where he had founded the Rin phug Monastery and was in charge of several caves. When getting old, he wanted to hand them over to Kun dga' dpal 'byor, but finally offered all religious institutions under his supervision to the 4th Zhwa dmar.[1374] This shows that Kun dga' dpal 'byor may initially have benefitted from an important symbolic capital that somehow decreased later in his life.

4.6.2. Ngag dbang grags pa and the sTag lung bka' brgyud

One of his students was the 12th sTag lung abbot, Ngag dbang grags pa (1418-1496), who came to sPre'u zhing in 1443 in order to receive all initiations, commentaries and key-instructions of the Mar rngog lineage from Byang chub dpal.[1375] Not much is known about the details of their encounter, but the rNgog traditions seem to have been considered highly in the sTag lung lineage. Both the 1st abbot of sPre'u zhing, Kun dga' rdo rje (1145-1222) and the 4th one, Chos kyi rgyal mtshan (1283-1359), are reported to travel to sTag lung monastery in Central Tibet and Ri bo che in Khams (see section II.3.4). It is said that the latter offered several empowerments there, and displayed miracles. Later in the 15th century, the 4th Zhwa dmar granted rNgog traditions during a visit in sTag lung in 1493,[1376] and Kun dga' grol mchog (1507-1566) also gave the rNgog maṇḍalas he had received from rNgog Blo gros dpal bzang to the 16th sTag lung throne-holder, dBon Rin po che Kun dga' bkra shis (1536-1599/1605). It is a task of future research to assess in more detail the nature of the relationship between the rNgog pas and the sTag lung pas.

4.6.3. The Yar rgyab family and the Sa skya

In the 15th century, the gZhung valley and sPre'u zhing were in the sphere of influence of the Yar rgyab family, which had been the regional rulers of the Yar rgyab and Gong dkar districts since the reign of Grags pa rgyal mtshan (1374-1432).[1377] During the abbacy of Byang chub dpal, the governor of Gong dkar was Drung chen bZhi' dzom. The possible tensions between the two were mentioned above. After the meeting between Byang chub dpal and Tsong kha pa, however, these tensions disappeared, and several members of the Yar rgyab family became disciples of Byang chub dpal.

[1372] KGND dkar chag, 23-25.

[1373] Ehrhard 2002b, 17-18.

[1374] See Erhahrd 2002, 18, n. 11 for bibliographical references, especially *mKhas pa'i dga' ston*, 1120.

[1375] *sTag lung chos 'byung*, 1: 611: *gzhung spre'u zhing du rngog ston rin po che byang chub dpal ba'i drung du mnga' bdag mar rngog nas brgyud pa'i dbang bka'/ bshad bka'/ man ngag gi bka' thams cad ma lus pa gsan te thugs su chud.* See Sørensen and Hazod 2007, 745-746;

[1376] Zh4 *gSung 'bum*, 6: 973.

[1377] See a map and a description of the territory of Gong dkar and Yar rgyab in Fermer 2017, 79. Gong dkar was comprised of the valleys of Byang thang, sKul and 'Ching ru (where Gong dkar chos sde is located), and gZhung. Yar rgyab was composed of the valleys of Dol and Grwa (where Byams pa gling is located).

One of them was the *Kālacakra* master Byams pa gling pa bSod nams rnam rgyal (1400-1475),[1378] the nephew of Drung chen bZhi ’dzom. He became the abbot of Byams pa gling Monastery in the lower part of the Grwa nang valley when the monastery founder, his younger brother dGe bsnyen lHun grub bkra shis, became the Yar rgyab ruler in the early 15th century. Byams pa gling then became the Yar rgyab family monastery and was very important throughout the 15th century.[1379] A monumental stūpa was built in 1472/73 with the assistance of Lo chen bSod nams rgya mtsho and Great Prayer Festivals (*smon lam chen mo*) were held annually.[1380]

Byams pa gling pa bSod nams rnam rgyal received from rNgog Byang chub dpal the seven maṇḍalas as well as several other transmissions during an extended visit in sPre’u zhing in 1432.[1381] In the record of teachings received by the 4th Zhwa dmar, Byams pa gling pa figures in the *Catuṣpīṭha sādhana*s reading transmission lineage between rNgog Byang chub dpal and Lo chen.[1382] Byams pa gling pa’s biography describes how, while he was in sPre’u zhing, he fell sick and was cured by an emanation of Dud sol ma.

Byams pa gling pa was the ordination master and an important lama of his nephew, Gong dkar ba Kun dga’ rnam rgyal (1432-1496), who also met Byang chub dpal and received the seven maṇḍalas from him in the 1440s.[1383] Later on, Kun dga’ rnam rgyal completed his transmission of the rNgog tradition with rNgog bSod nams don grub (see section II.5.3). Kun dga’ rnam rgyal held the office of Yar rgyab *dpon chen* between 1444 and 1446 and went on to found a powerful monastery, Gong dkar chos sde, which would later be granted the land of sPre’u zhing and the responsibility to look over the precincts (see section II.5.4).

[1378] See his biography in Fermer 2010, 49-52. See Akester 2016, 275-277; Ehrhard 22002a, 79, 83-85, Fermer 2017, 82.

[1379] Fermer 2017, 74.

[1380] Czaja 234-235, n. 93.

[1381] Byang chub rnam rgyal dge legs’s *Byams pa gling pa’i rnam thar*, 19a-20a: *de nas dgung lo sum cu rtsa gsum pa/ yongs ’dzin zhes bya ba chu pho byi ba’i lo la [=1432]/ zhwa lu rin po che yar lung nas yar phebs pa’i lam zhor la/ byams pa gling du phebs pa’i tshe/ bcom ldan ’das rnam par snang mdzad mngon par byang chub pa’i rdul tshon gyi dkyil ’khor du dbang bskur ba dang / de nyid kyi dkyil chog gi lung gsan/ de nas gzhung spre zhing du thegs te/ rin po che byang chub dpal ba la/ dgyes pa rdo rje lha dgu/ bdag med ma lha mo bco lnga/ gur rigs bsdus/ gdan bzhi rnal ’byor nam mkha’/ ye shes mkha’ ’gro ma/ sgyu ’phrul chen mo/ ’jam dpal gsang ldan te/ rngog lugs kyi dkyil ’khor bdun gyi dbang dang / dud sol lha mo’i rjes gnang / brtag gnyis/ mkha’ ’gro ma rdo rje gur/ saṁ pu Ta/ gdan bzhi rtsa rgyud/ bshad rgyud le mangs/ mantra aṁ sa/ dkyil chog snying po mdo bsags/ ma hā mā ya/ ’jam dpal mtshan brjod/ sgrub thabs gsang ldan/ sngags don rnam gzigs la sogs rngog lugs kyi bka’ mtha’ dag sgros? che chung dang bcas pa gsan/ gzhan yang / de nyid ’dus pa la sogs pa rgyud mang po dang / man ngag snye ma sogs ’grel gzhung mang po yang gsan zhing / sprel zhing du bzhugs dus sku ’brum shin tu mthug pa zhig byung nas sku khams mnyel ba’i tshe/ mnal za zi’i ngang zhig la/ bud med cig dbu sngas mgor byung nas/ da lta jo gdan bye rdzing tshogs pa gzhung mda’ na yod pa la sku rim zhig mdzad na phan par ’dug ces zer ’byung ba bzhin/ mang ja dang na bza’i ’gyed gnang bas/ ’phral du sku khams bde ba’i skyed che bar byung ste/ bud med de dud sol lha mo’i sprul pa zhig yin pa ’dra/ de’i tshe nad ngo bo las grol nas/ gzugs po gso dgos pa’i skabs su/ nang so rnams skyid mo bshongs na phyag tsha ’debs pa la bzhugs yod pa’i sa na/ dpon mo bas za ma bzang po mang po skyel btang byung bas shin du skabs su bab pa byung zhes gsung ngo.*

[1382] Zh4 *gSan yig*, 809-810

[1383] Fermer 2010, 128.

Thus, rNgog Byang chub dpal attracted many of the powerful figures of the Yar rgyab family and was thus instrumental in the continuation of the rNgog tradition within the Sa skya order, especially within the Gong dkar branch, and more broadly in its regional implantation. Evidence of his long-lasting influence on the local religious landscape is the omnipresence of Dud sol ma statues in the monasteries and temples of the rNam rab and Gong dkar valleys.[1384] The large amount of funding available to him at that period may have contributed to the revival of sPre'u zhing, and it is likely that most of the rNgog texts now available were copied then.

4.7. The fourth Zhwa dmar Chos grags ye shes (1453-1524)

The most instrumental of Byang chub dpal's disciples in the further spread of the rNgog traditions were 'Gos Lo tsā ba and his disciple, Lo chen bsod nams rgya mtsho, who passed on the teaching to one of the greatest religious figures of the late 15th-early 16th century, the 4th Zhwa dmar Chos grags ye shes, who was born a few years after Byang chub dpal's demise.[1385]

The 7th Karma pa Chos grags rgya mtsho (1454-1506) and the 4th Zhwa dmar pa Chos grags ye shes (1453-1524) were born one year apart. In the absence of the two heads of the Karma bka' brgyud order, the central figure of the lineage was the mTshur phu abbot, the first rGyal tshab dPal 'byor don grub (1427-1489). He recognized the young Zhwa dmar and gave him the novice ordination.[1386] In his youth, the 4th Zhwa dmar toured Eastern Tibet in order to visit the monasteries and retreat hermitages founded by his predecessors and received teachings from many masters. He travelled to Central Tibet at 22, in 1476. He visited mDan sa mthil Monastery, where he was welcome by the abbot, *sPyan snga* Ngag gi dbang po (1439-1491), the son of Grags pa 'byung gnas (1414-1445). He then paid his respect to 'Gos Lo tsā ba and Nam mkha' blo gros of rTsed thang, who were the preceptors of the Rlangs lha gzigs family, that is to say the Phag mo gru pa dynasty. He took his final ordination with them, and received many teachings from 'Gos Lo tsā ba during a period of six months.[1387] It was also at that time that he met Lo chen bSod nams rgya mtsho, from whom he received, among others, "Mar pa's tradition."

[1384] Field trip, June 2014.

[1385] For a visual representation of the 4th Zhwa dmar, see http://www.himalayanart.org/items/2 (and references in Jackson 2009, 86-89).

[1386] Ehrhard 2002b, 14-15. For biographical accounts of the 4th Zhwa dmar's life and activity, see his autobiography (*gSung 'bum*, vol. 6, pp. 931-996); *mKhas pa'i dga' ston*, 1115-1148; *Zla ba chu shel gyi phreng ba*, 11: 689-718; Ehrhard 2002b, 11-27; Czaja 2013, 233-256, Fermer 2017. The focus of Ehrhard 2002b is the religious formation of the 4th Zhwa dmar, especially with Lo chen bSod nams rgya mtsho, until the death of the latter (1482). The focus of Czaja is the political history of Central Tibet, and he therefore approaches the 4th Zhwa dmar from the perspective of his relationship with the Phag mo gru pa regime.

[1387] *mKhas pa'i dga' ston*, 2: 1121-1122; Czaja 2013, 233-234; Zh4 *gSung 'bum*, 1: 560-561. The rNgog cycles are not included in the list, although some of their transmissions are (*Mahāmāyā* and *Catuṣpīṭha*). 'Gos Lo tsā ba, called rJe Yid bzang rtse pa in this account, was 84 at the time, but his numerous teaching session and the simultaneous release of the *Deb sngon* point to a very active lama.

’Gos Lo tsā ba and Lo chen bSod nams rgya mtsho were very close. They were the preceptors of many officials of the Rlangs lha gzigs and Yar rgyab families ruling all over south Central Tibet (lHo ka),[1388] and enjoyed a central position in the religious landscape of the period. When the 4th Zhwa dmar arrived in Central Tibet, he was directly introduced to the court and had access to funding from many of the wealthy patrons of the period, especially rDo rje bde ma from Yar rgyab (d. 1491, the wife of dPon chen Rin chen bzang po deceased in 1475/76)[1389] and her two sons. rDo rje bde ma participated in the commission of several statues for the Zhwa dmar monasteries of gNas gnang and dGa’ ldan ma mo.[1390]

In 1478, Chos grags ye shes met again with ’Gos Lo tsā ba and Lo chen. He spent time with Lo chen at lHun grub lha rtse, the residence of the Yar rgyab rulers in the lower part of the Dol valley and received the rNgog traditions. These transmissions induced deep experiences in him, and he developed a great aspiration to go and meditate in Mar pa’s seat in lHo brag.[1391] He made offerings and meditated at many of the places related to Mar pa, staying one year in bKra shis dge ’phel, the hermitage he founded there.[1392]

He came back to dBus in 1481,[1393] and met ’Gos Lo tsā ba one last time. He gave teachings on the rNgog traditions to the gDan sa mthil abbot Ngag gi dbang po, who became the ruler of sNe’u gdong later that year, and met for the first time Don yod rdo rje, the ruler of the Rin spungs pa family who was gaining power over the Phag mo gru pa. Before the 1482 new year, ’Gos Lo tsā ba died and the 4th Zhwa dmar attended the funeral ceremonies together with Lo chen. In 1482, the two welcomed the 7th Karma pa, Chos gras rgya mtsho, in the palace of the Yar rgyab rulers in Dol. Then, the two Karma bka’ brgyud hierachs went to mTshur phu, and the 4th Zhwa dmar came back after several months, stopping at sPre’u zhing on the way.[1394] After some time, there was a final meeting with Lo chen in the latter’s hermitage of bSam gtan gling in the Dol valley. The 4th Zhwa dmar received some teachings from Lo chen, and the two consecrated together ’Gos Lo tsā ba’s reliquary. Finally, while the Red-Hat lama was again in his hermitage in lHo brag, he heard the news of Lo chen’s passing. Four days later, on the 21st day of the 9th month of 1482, he was back in the Dol Valley and performed the funeral rituals on behalf of his Yar rgyag patrons. One evening, he had a vision of ’Gos Lo tsā ba and Lo chen in front of him in the sky, with masses of fire penetrating his body and

---

[1388] Fermer 2017.

[1389] Fermer 2017, 81-82

[1390] *mKhas pa’i dga’ ston*, 2: 1122; Ehrhard 2002b, 21.

[1391] Ehrhard 2002b, 22; *mKhas pa’i dga’ ston*, 2: 1123: *dol lhun grub lha rtser rje lo chen la rngog chos rnams gsan tshe nam mkha’ la lha’i rnga grag pa dang mtsho chen po zhi lhag med tu gsol ba’i ltas gzigs/* […] *rje mar pa’i sgrub gnas gzigs par bzhed pas lho brag la phebs te sa mo phag lo shar ba na sras dro bo lung du phebs te mchod bstod mdzad.* Zh4 *gSung ’bum*, 6: 951: *g.yor po dol gyi lhun grub lha rtse ru/ /dpal ldan bla ma kun mkhyen lo chen gyi/ /brtse ba’i thugs kyis legs par bzung nas kyang / /lho brag mar pa nas rgyud rngog dkyil drug /’khor los bsgyar drug sangs rgyas thod pa dang / /smri ti las rgyud ’jam dpal gsang ldan dbang / /de dag rnams kyi rgyud kyi bshad pa dang / man ngag so so’i bka’ babs gnang ba’i tshe/ /mkha’ la lha yi rnga sgra sgrog pa byung / /rmi lam nyid du mtsho chen gang ba yang / /snod kyi chu bzhin mtha’ dag btung byas pa’i/ /ltas kyi khyad par ya mtshan che ba snang.*

[1392] Zh4 *gSung ’bum*, 6: 952.

[1393] Zh4 *gSung ’bum*, 6: 953; Ehrhard 2002b, 23.

[1394] *mKhas pa’i dga’ ston*, 1125-1126; Ehrhard 202b, 25; Czaja 2013, 236-238. Zh4 *gSung ’bum*, 6: 958.

transferring to him their realization of the wisdom body as it is taught in the *Kālacakra* system. Soon afterwards, he went to the Gong dkar valley where he met Kun dga' rnam rgyal, the son of his patron rDo rje bde ma, who had himself received the rNgog teachings from Byang chub dpal and later from rNgog rgyal tsha bSod nams don grub.[1395] Later that year, he composed a long biography of Lo chen.

In the absence of his two masters, the 4th Zhwa dmar continued to play a central role in the political maelstrom of dBus and gTsang, as he had ties with officials in the Phag mo gru pa and Rin spungs pa courts, who were vying with each other for power (largely at the expanse of the former). The Rin spungs pa also strongly opposed the dGe lugs pas, who were developing their rule over the lHa sa zone. In 1491, the Phag mo gru pa ruler Ngag gi dbang po, who was also mDan sa mthil abbot, felt he was close to death. He went to gDan sa mthil with the 4th Zhwa dmar and transferred to him the responsibility of the Monastery. Chos grags ye shes gave the lay vows to Ngag gi dbang po's three-year-old son, Ngag dbang bkra shis grags pa (1488-1563/4). When Ngag gi dbang po died later that year, the Rin spungs pa gained a *de facto* power during the minority of Ngag dbang bkra shis grags pa, but unrest erupted in the Yar klungs region. In 1493, after some mediation by the sTag lung hierach Ngag dbang grags pa (1418-1496), the 4th Zhwa dmar consented to become the *sPyan snga*, i.e. "abbot," of gDan sa mthil. Henceforth, he was called *sPyan snga* Chos grags ye shes, and the gDan sa mthil Monastery remained under the jurisdiction of the Zhwa dmar incarnation line, escaping any destruction until the middle of the 20th century.[1396]

The Zhwa dmar pa remained a powerful figure until his death in 1524, travelling incessantly between the various monasteries and hermitages he was in charge of, and relating to most of the important religious hierarchs of his time. In that way, he spread the rNgog maṇḍalas (as well as all the other traditions he held) far and wide.

'Brig gung bka' brgyud

As mentioned in Chapter I.1., among the many disciples of the 4th Zhwa dmar, two are particularly noteworthy in the present context, namely the 16th 'Bri gung abbot Kun dga' rin chen (1474-1527) and his younger brother and successor on the seat of 'Bri gung mthil Monastery, Rin chen phun tshogs (1509-1557). It is stated in Kun dga' rin chen's biography that he and the 4th Zhwa dmar were invited together to the court of the Rin spungs ruler Don yod rdo rje and that Kun dga' rin chen later invited the 4th Zhwa dmar to 'Bri gung mthil.[1397] Kun dga' rin chen's brother took monastic ordination with the 4th Zhwa dmar and spent several years in the Zhwa dmar monastery of Yangs pa can, where he received numerous transmissions.[1398] Thus, strong ties were built between the Karma and 'Bri gung bKa' brgyud lineages at that time, which benefitted the spread of the rNgog Traditions. The *Hevajra* lineage received by the 'Bri gung hierarchs from the 4th Zhwa dmar, for example, continued

---

[1395] *mKhas pa'i dga' ston*, 1127; Ehrhard 2002b, 27; Fermer 2010, 150-151.

[1396] Czaja 2013, 241-244; Czaja 2013, 40.

[1397] *'Bri gung gdan rabs*, 168-170 and 174.

[1398] *'Bri gung gdan rabs*, 187-188.

all the way to the present Che tshang Rin po che and became an important tantric practice in that lineage. It was also through the ’Bri gung lineage, and especially Khra lebs Rin po che, that Kong sprul received the reading transmission of the Complete Works of the 4th Zhwa dmar, which proved indispensable for his compilation of the *bKa’ brgyud sngags mdzod*.

CHAPTER FIVE: the gZhung valley after Byang chub dpal

As argued in the previous chapter, rNgog Byang chub dpal (1360-1446) is often considered the last influential master to live in sPre'u zhing, a fact represented by the declaration that he is the last of seven generation having been blessed by Mar pa and/or Nāropa. In the end of his life, he gave to the second rGyal dbang 'Brug pa many treasures in his possession and he appointed him as the one to head his funeral, thus depriving his heirs of their full legitimacy. Although the symbols of the rNgog tradition are thus described by some sources as leaving the family, the gZhung valley did not immediately stop being inhabited by rNgog clan members. Several of the lineages now available in fact trace to descendants of the family that lived into the 17th century. Their traces, however, become more elusive as they are dispersed in the biographies of those who entertained spiritual bonds with them and often not very detailed. Despite lacunas, some idea can be gained of the activity in gZhung until approximately the early-17th century.

5.1. The situation at Byang chub dpal's death

After the death of Byang chub dpal in 1446, his remains were enshrined with those of Mar pa and his predecessors in a reliquary in sPre'u zhing, but very little detail is provided on the events surrounding his succession.[1399] The only source to provide a description is Padma dkar po who states in his *Religious History* that three masters of the rNgog family attended Byang chub dpal's funeral. Although their identity is not completely certain, they presumably represent the heads of the three branches of the rNgog family that had developed by the 15th century:[1400]

- **bKra shis dpal grub** of the gTsang tsha branch is the son of Byang chub dpal and sPre'u zhing's abbot since at least 1426 (see part II.4. for details). Padma dkar po gives the name Byang chub dpal grub (bKra shis dpal grub's son), but this is likely to be an error, as the *lHo rong chos 'byung*, composed in 1446, wishes bKra shis dpal grub a long life, which indicates that he was not dead and thus probably in charge of sPre'u zhing at that time.[1401] His son Byang chub dpal grub may have been quite young as he was still active in the end of the 15th century and is listed among Kun dga' rnam rgyal's disciple (see below).

[1399] *lHo rong chos 'byung*, 65.

[1400] *Pad dkar chos 'byung*, 610-611 (biography of Kun dga' dpal 'byor): *rngog rin po che bdun brgyud kyi dbang bum 'di'ang khong la phul zhig gsung/ de bzhin rngog byang chub dpal grub pa/ rin chen bzang po/ don grub dpal bzang rnams kyi[s] mdzad*.

[1401] If it is an error, it is not a scribal one as Padma dkar po indicates elsewhere that Byang chub dpal grub was the abbot when Byang chub dpal died: *Pad dkar chos 'byung*, 465: *rang lo brgya cu rtsa bdun pa la gshegs/ gdan sa dbon byang chub dpal grub pas bzung.* The *lHo rong chos 'byung*, 65, considers however that bKra shis dpal grub was in charge: *chung ba gdan sa bkra shis dpal grub bo/ yun ring zhabs brtan par gyur cig.* See more details on Byang chub dpal grub below.

- **Rin chen dpal bzang po** was his cousin of the gTsang tsha branch. He is the nephew of Sangs rgyas yon tan and a prolific author.[1402] In two colophons, he indicates that he wrote in Brag dmar chos ’khor gling, which was probably the name given to the temple associated with the new house founded by his grandfather, Khrom rgyal ba. Rin chen dpal bzang po may be the one referred to as “Chos rje sNa ra ba” in the biography of Kun dga’ dpal ’byor.[1403] His uncle, Sangs rgyas yon tan, was called “Bla ma sNang rab” in a history of Zul phu,[1404] and it is therefore likely that sNang rab, or sNa ra ba, was the name of the house founded by Khrom rgyal ba. This place may be located in the village that is now rNam rab, the main settlement of the valley (see the second part of this chapter for details). No detail is known about any of his successor.
- **Don grub dpal bzang**. This may be the person called mDom chung ba in Kun dga’ dpal ’byor’s biography and lDum chung ba Don grub dpal ba, one of Byang chub dpal’s disciples, in the *Deb ther sngon po*.[1405] His identity is not clear but in all likelihood it refers to bSod nams don grub of the rGyal tsha branch who gave important rNgog transmissions to Kun dga’ rnam rgyal in the 1460s (see below).

These three masters thus represent the three main branches of the rNgog who retained a religious influence in the 15th century. According to Padma dkar po, the three were present and active when Byang chub dpal died. They accepted his last will and testament, and let the ’Brug chen Kun dga’ dpal ’byor direct the ceremony, a role traditionally held by the sPre’u zhing abbots.

5.2. Succession in the gTsang tsha branch: sPre’u zhing

5.2.1. rNgog Byang chub dpal grub

’Gos Lo tsā ba states in the *Deb ther sngon po* (compiled in 1476) that bKra shis dpal grub was installed as sPre’u zhing’s abbot during his father Byang chub dpal’s life (presumably in 1426) and that his son, Byang chub dpal grub, was the abbot in 1476.[1406] rNgog Byang chub dpal grub remained abbot for a few decades and sustained an activity in sPre’u zhing. gTsang smyon He ru ka (1452-1507) visited “sPrel zhing ri bo khyung lding” in the 1480s. At that time, he stayed in retreat in Mi la ras pa’s cave for a few months, and participated at a *Nairātmyā gaṇacakra* together with Byang chub dpal grub and his disciples.[1407] A few decades later, his disciple rGod tshang ras chen (1482-1559) also spent three months in Mi la

---

[1402] See above part II.3.4.8. for biographical details.

[1403] KP *rnam thar*, 15-16: *rngog pa’i dge ba’i gshes gnyen chos rje sna rab ba dang mdom chung ba la sogs pa rnams kyi kyang shin tu dad par gyur nas chos kyi ’brel pa zhus thugs yid ’dres par gyur.*

[1404] See above part II.3.4.8.

[1405] *Deb sngon*, 497.

[1406] *Ibid*., 499.

[1407] See gTsang smyon’s biograpy by his disciple rGod tshang ras chen sNa tshogs rang grol, p. 118. See a presentation of this biography in Smith 2001, 59-80. The part in sPre’u zhing is in chapter 10, described in Smith 2001, 65. The events take place just before gTsang smyon started his biography of Mi la ras pa, which was published in 1488. See also Ehrhard 2010, 141, n. 22.

ras pa's cave in the gZhung valley.[1408] During his retreat, he received several transmissions from rNgog Byang chub dpal grub, including *Hevajra*, *Mahāmāyā* and *Dud sol ma*. He was also granted transmissions associated with the *Cakrasaṃvaratantra* that Byang chub dpal grub had received from his grandfather Byang chub dpal.[1409] Interestingly, rGod tshang ras chen mentions in the autobiography that he also studied biographies of the bKa' brgyud masters, especially the *gDung rabs*. This genealogy may be ST2.

In 1482, sPre'u zhing was visited by the 4th Zhwa dmar.[1410] Although the Karma bka' brgyud hierarch had a strong appreciation for the rNgog traditions, he obviously came there more to visit the place than to meet its master. He only mentions in his autobiography that he was invited by the "seat-holder" (presumably Byang chub dpal grub), and that he gave him some teachings as well as offerings, apparently not requesting any transmission. This may indicate that in the eyes of the 4th Zhwa dmar, the legitimacy of the rNgog traditions lay more in the hands of 'Gos Lo tsā ba and Lo chen bSod nams rgya mstho than in the blood lineage of rNgog Byang chub dpal.

5.2.2. rNgog Byang chub grags pa

rNgog Byang chub grags pa is listed as a disciple Gong dkar ba Kun dga' rnam rgyal, where he is said to be the nephew (*dbon po*) of the sPre'u zhing's abbot rNgog Byang chub dpal grub.[1411] As Byang chub dpal grub is not known to have had any siblings, Byang chub grags pa may either be the son of an unknown brother or sister, or the son of Byang chub dpal grub's uncle Rin chen rdo rje, which seems more likely. Nothing is known about him.

5.2.3. rNgog Blo gros dpal bzang and the transmission to Kun dga' grol mchog

rNgog Blo gros dpal bzang was the disciple of Byang chub grags pa, and probably his son. He lived in the early 16th century. He is listed in four lineages (*Mahāmāyā*, *Nāmasamgīti*, *Vajramahākāla* and *Dud sol ma*) of the KGND as the master of Kun dga' grol mchog (1507-1565, called Ye shes rdo rje by Kong sprul).[1412] It is written in Kun dga' grol mchog's

---

[1408] Ehrhard 2010, 141, for the translation and p. 152 for the Tibetan version of rGod tshang ras chen's autobiography.

[1409] The lineages of these transmissions are provided in rGod tshang ras chen's commentary on the tantra, *bDe mchog spyi bshad theg mchog bdud rtsi'i dga' ston ye shes chen po'i sman mchog* (W21140), 6-13. They were later also recorded in the *rGyud sde kun btus*, 30: 36.

[1410] ZH4 *gSung 'bum*, 958: *gzhung gi sprin zhing gnas mchog mjal du phyin/ /rje btsun lho brag mar pa'i gdung khang dang / /rje btsun mi la ras pa'i sgrub phug sogs/ /rten gsum rnams la mchod pa'i bye brag phul/ /gdan sa pa yis thog drangs der 'dus la/ /chos dang zang zing dngos pos sbyin gtong byas/*

[1411] Fermer 2009, 324-346. The three rNgog disciples of Gong dkar ba are listed on p. 339, nos. 60-62. *Gong dkar ba rnam thar*, p. 171: *gangs can gyi ljongs 'dir sgrub brgyud kyi bstan pa'i bdag por gyur pa rngog ston byang chub dpal grub dang/ de'i dbon po rngog ston byang chub grags pa/ rngog tshang 'og ma rngog ston bsod nams lhun po*.

[1412] KGND dkar chag, 1: 31, 36, 40 and 41. In each case, the lineage is referred to as the Jo nang one, that is to say the lineage coming from Kun dga' grol mchog and Tāranātha until Kong sprul. An alternative is the Kam tshang lineage passing through the 4th Zhwa dmar. Note however that Kong sprul inverses the order of bKra shis

biography that the Jo nang throne-holder (he was Jo nang Monastery's abbot from 1546 to his death) was invited to gZhung sPre zhing by the "family lineage holder," identified as Blo gros dpal bzang in a note.[1413] There, he was given the empowerments of the seven rNgog maṇḍalas, the explanation and reading transmission of the *Rin chen rgyan 'dra*, merging and transference, the *Six Doctrines from Sras mkhar*, several perfection phases of *Catuṣpīṭha* and *Mahāmāyā*, and the empowerment and reading transmission of the protective deity Dud sol ma. After appropriate offerings and service, Kun dga' grol mchog received the transmissions again.

This event may have occurred in the middle of the 16th century. The biography continues by saying that after his visit to sPre'u zhing, Kun dga' grol mchog returned to sTag lung Monastery. There, he gave the seven maṇḍalas to gCung Ras chen ba, that is to say 'Gros mgon Ras pa chen po (1532-1603),[1414] the brother of the 15th throne-holder Chos skyong bkra shis, who held the seat temporarily between 1550 and 1552. This may have been the time of Kun dga' grol mchog's visit as he refers to Ras chen ba as "gCung Rin po che." At that time, Kun dga' grol mchog also granted pure lay vows to the future throne-holder, dBon Rin po che Kun dga' bkra shis (1536-1599/1605, tenure 1555-1579/1585). In another biography of Kun dga' grol mchog, it is stated that he also gave him the seven maṇḍalas.[1415]

One of Kun dga' grol mchog's important compositions was the *Jo nang khri brgya*, a collection of 108 techniques associated with various perfection phases now mainly conserved in the vol. 18 of the *gDams ngag mdzod*.[1416] Among these, three come from the rNgog, namely the perfection phases associated with the *Hevajratantra* (*bSre'pho*) and those associated with the *Mahāmāyā*- and *Catuṣpīṭhatantra*. Kun dga' grol mchog transmitted these to one of his important disciples, Brag stod pa lHa dbang grags pa, who in turn gave them (along with many other transmissions) to Tāranātha (1575-1634), who was considered Kun dga' grol mchog's incarnation.

Tāranātha played an important role in the codification of some of the rNgog maṇḍalas, for instance that of the gSang ldan tradition of *Nāmasaṃgīti* that came from rNgog Blo gros dpal bzang and Kun dga' grol mchog's lineage. He composed a manual for the ritual and initiation of gSang ldan that was used as a basis for further elaboration and clarification by Kong sprul

---

dpal grub and his son Byang chub dpal grub: *rngog byang chub dpal ba, rngog byang chub dpal grub, rngog bkra shis dpal grub, rngog blo gros dpal bzang, ye shes rdo rje*.

[1413] *Kun dga' grol mchog gsung 'bum*, 2: 575: *gzhung spre zhing gi gdung rgyud pa (blo gros dpal bzang) spyan drangs nas rngog dkyil bdun gyi dbang/ rin chen rgyan 'dra'i bshad lung bsre 'pho chos drug sras mkhar ma/ gdan bzhi dang/ ma hā mā ya'i rdzogs rim mtha' dag dang/ bka' bsrungs dud gsol ma'i dbang lung la thug gi bar rdzogs par zhus/ 'bul ba dang zhabs tog cha mthun bsgrubs nas skyar log bgyis*. The name Blo gros dpal bzang is given in brackets. In another version of the same text (*Kun dga' grol mchog phyi nang gsang gsum gyi rnam thar*, Pecin: Mi rigs dpe skrun khang, 1995, 203) the name is not specified.

[1414] Sørensen and Hazod 2007, 2: 747.

[1415] *Kun dga' grol mchog gsung 'bum*, 2: 633. Thanks to Cyrus Stearns (private mail conversation, May 2014) for pointing out for me the references about the rNgog in Tshar chen and Kun dga' grol mchog's biographies.

[1416] The DND is being translated by the Tsadra foundation, and an electronic bersion is available online: http://dnz.tsadra.org/index.php/Gdams_ngag_mdzod_Shechen_Printing/Volume_18. See also Barron 2013, 112.

in the KGND,[1417] and which constitutes a good example of Kong sprul's *modus operandi* for his compositions.[1418]

It can therefore be concluded that although Blo gros dpal bzang's influence was probably quite limited—the second dPa' bo gTsug lag phreng ba (1504-1566) states in the *mKhas pa'i dga' ston* (composed between 1545 and 1565) that the activity of the rNgog had completely waned in the gZhung valley[1419]—he was still considered a full holder of the rNgog lineage, and important hierarchs came to receive his transmission.

5.3. Succession in the rGyal tsha branch: Thar pa gling

5.3.1. rNgog bSod nams don grub

bSod nams don grub of the rGyal tsha branch was active in the decades following the death of Byang chub dpal and is given the title *chos rje* in ST2,[1420] which indicates that he was already considered a legitimate spiritual master during the life of Byang chub dpal. As mentioned above, he is also known by the name lDum chung ba Don grub dpal ba; lDum chung may be the name of his house, presumably different from the traditional rGyal tsha seat Ri bo kyung lding.[1421] He is mentioned in the *gsan yig* of the fifth Dalai Lama[1422] and in the biography of the founder of the neighboring monastery of Gong dkar chos sde, Kun dga' rnam rgyal (1432-1496).[1423] He was probably, therefore, one of the most active rGyal tsha masters in the mid to late 15th century and is the author of a commentary on the *Mahāmāyātantra*, two rituals associated with *Catuṣpīṭha* and several others related to *Dud sol ma* in the volume 14 of the *rNgog slob brgyud dang bcas pa'i gsung 'bum*.[1424] Three of these commentaries were composed at gZhung Ri bo khyung lding.[1425] The other, the external *sādhana* of Dud sol ma,

---

[1417] The text by Tāranātha is "'Jam dpal gsang ldan gyi dkyil chog," In *gSung 'bum dpe dur ma*, 12: 181-239. This was divided into two by Kong sprul: "rGyud thams cad kyi bdag po 'jam dpal mtshan brjod rigs bsdus pa'i sgrub thabs ye shes 'bar ba'i ral gri," KGND, 4: 375-409 (= Tāranātha *gSung 'bum dpe dur ma*, 12: 181-202) and "'Jam dpal rigs bsdus kyi dkyil 'khor gyi cho ga gsang ba kun 'byung gi glegs bam," in KGND, 4: 411-463 (= Tāranātha *gSung 'bum dpe dur ma*, 12: 202-239).

[1418] Although a detailed study of the difference between the compositions by Tāranātha and Kong sprul goes beyond the reach of the present study, examples of differences are the long introduction by Kong sprul or the detailed *sa bcad* with which he outlines the *sādhana* as if it was a philosophical commentary. As far as the *sādhana* itself is concerned, Kong sprul largely copies Tāranātha's wording. Sometimes, when Tāranātha refers to the possible addition of a prayer, or abbreviates it, Kong sprul includes that prayer, or quotes it *in extenso*.[1418] These characteristics are representative of Kong sprul's aim when compiling the KGND, that is to say clarify the traditions and make their transmission easier in order to safeguard them.

[1419] *mKhas pa'i dga' ston*, vol. 1, p. 779. The last master mentioned is rNgog Byang chub grags pa.

[1420] ST2, 32.

[1421] *Deb sngon*, 497.

[1422] DL5 *thob yig*, 1: 369a (lineage of the external *sādhana* of *dud sol ma*): *rngog byang chub dpal/ rngog khra tshang ba bsod nams don grub/ rngog mdo sde yang zer*. The fact that Don grub dpal was also known as rNgog mDo sde is not reported in any other source.

[1423] Fermer 2009, 126-129.

[1424] NKSB, 14: 1-261.

[1425] NKSB, 14: 142, 183, 252: *gzhung ri bo khyung lding gi dgon pa*.

was compiled at the "great Ri bo chos lding seminary in gZhung," which may have been a seminary attached to the seat of the rGyal tsha branch. It was composed in 1469, which indicates that there was still substantial activity in the rGyal tsha seat at the time.[1426] His compositions and the ones of his cousin Rin chen dpal bzang po are the latest recorded in the rNgog collections.

Kun dga' rnam rgyal's biographer rGya ston describes him as Byang chub dpal's *gcung po*, "brother," but it should be clear from the genealogy in ST2 that bSod nams don grub was only a cousin. The two are referred to as the *rNgog pa rnam gnyis*, "the two rNgog." Kun dga' rnam rgyal received from him the explanations and reading transmissions for the rNgog maṇḍalas, having earlier received the empowerments from Byang chub dpal.[1427]

5.3.2. rNgog bSod nams lhun po

rNgog ston bSod nams lhun po is the third rNgog disciple of Kun dga' rnam rgyal and was therefore a contemporary of Byang chub dpal grub and Byang chub grags pa of the gTsang tsha branch. He was from the lower seat, and was therefore related to bSod nams don grub although their exact relationship is uncertain. In ST2, it is said that bSod nams don grub and his four brothers had (collectively?) three sons, lHa dbang bzang po, rDo rje bkra shis and Rin chen dbang phyug, and that the latter's son was bSod nams dpal dbyangs, which could be another name of bSod nams lhun po.[1428] In the lineage of Dud sol ma received by the 5th Dalai Lama, a Shākya don grub intercedes between bSod nams don grub and bSod nams lhun po,[1429] so he could possibly be a great-nephew.

The Dalai Lama calls bSod nams lhun po "Thar gling pa," which may refer to the fact that bSod nams lhun po did not reside in the old rGyal tsha seat, gZhung ri bo or gZhung ri bo khyung lding, but that he (or one of the brothers in the previous generation) had moved to another place called Thar [pa] gling. As mentioned below, the location of the new seat is not conclusively identified, but it may have been down in the valley. bSod nams lhun po's son, rNgog bSdod nams bstan 'dzin, was also officiating in Thar pa gling and was thus called Thar pa gling pa by the Dalai Lama.[1430]

[1426] NKSB, 14: 261: *rngog gzhung pa bsod nams don 'grub gyis sa mo glang gi lo sa ga zla ba'i yar tshes gsum la/ gzhung ri bo chos lding gi chos grwa chen por sbyar ba'i dge bas 'gro kun 'dod don chos bzhin grub par gyur cig.*

[1427] *Ibid*, 128, n. 412.

[1428] ST2, 32: *de la sras lnga byon pa/ bla ma ras pa/ bla ma dpal 'byor ba/ mkhan chen dkon mchog bkra shis/ slob dpon dpal ldan bzang po/ chos rje bsod nams don grub pa/ de rnaṁs la sras gsuṁ/ slob dpon lha dbang bzang po/ slob dpon rdo rje bkra shis/ slob dpon rin chen dbang phyug/ de'i sras bla ma bsod rnaṁs dpal dbyangs/*

[1429] DL5 *thob yig*, 1: 369a.

[1430] *Tshar chen rnam thar*, 557: *gzhung rngog tshang 'og ma thar pa gling*.

5.3.3. rNgog bSod nams bstan ’dzin and Tshar chen Blo gsal rgya mtsho

rNgog bSod nams bstan ’dzin is the last rNgog master about whom something substantial is known. His name is not mentioned in any of the lineages received by Kong sprul but he was the master of several 16th-century masters.

The biographies of mNga’ ris Paṅ chen Padma dbang rgyal (1487-1542) describe that while this great rNying ma master and upholder of the Vinaya was in lHa sa, he aspired to receive the rNgog and Zhi byed teachings, maybe, in the former case, because his father claimed ancestral descent from Mar pa.[1431] He received a prophecy from Tāra that this would take place, and that he should first go to Gung thang. He did, and then proceeded to the gZhung valley. At the entrance of the valley, he had a vision that he was greeted by Dud sol ma. He then went to “gZhung sPre’u zhing and especially Thar pa gling,” where he received the seven rNgog maṇḍalas from rNgog bSod nams bstan ’dzin. In this version of the biography, he is said to be in his forty-third year, which would correspond to 1529. As however he also received *Red Yamāri* from Zhwa lu Lo chen Chos skyong bzang po (1441-1527) at approximately the same time, it may be wiser to accept the dates for mNga’ ris Paṅ chen’s journey to gZhung given by bDud ’joms Rin po che,[1432] namely that it occurred “starting from his 38th year,” i.e. from 1524 onward. From this account, we can deduce that in the mid-1520s, bSod nams bstan ’dzin was famous and active in the gZhung valley, and that he was not living in sPre’u zhing but in Thar pa gling.

Another famous disciple was Tshar chen bLo gsal rgya mtsho (1502-1566/7). His lineage was later received by the 5th Dalai Lama (1617-1682) who wrote his biography and largely relied on Tshar chen’s account to compose parts of his voluminous record of teachings received. In Tshar chen’s biography, one finds two passages describing the way Tshar chen received bSod nams bstan ’dzin’s transmission.[1433] The first event took place in 1523, while Tshar chen was in his twenty-second year. On that occasion, he received in gZhung the seven maṇḍalas, the protector Dud sol ma and the *Mi tra brgya rtsa*.[1434] The meeting is not very detailed.[1435]

Tshar chen met rNgog bSod nams bstan ’dzin again in 1540.[1436] At that time, he received the outer *sādhana* of Dud sol ma, and fell an irreversible trust in the lama. We are informed that bSod nams bstan ’dzin was worried because there was in gZhung an enemy that he could not

---

[1431] See *bKa’ ma mdo dbang gi bla ma brgyud pa’i rnam thar [Account of Eminent Masters in the Transmission Lineage of the ’Dus pa mdo Tantra]*. Leh: S.W. Tashigangpa, 1972, pp. 304-335. The particular passage about bSod nams bstan ’dzin is on p. 322.

[1432] Dudjom 1991, 805-808, especially p. 807 for the passage on bSod nams bstan ’dzin.

[1433] Thanks to Cyrus Stearn who guided me through Tshar chen’s biography and indicated the pages mentioning bSod nams bstan ’dzin (private communication, April 2014). According to him, the story about rNgog bSod nams bstan ’dzin and Tshar chen is very famous in the Sa skya order.

[1434] See Tanaka 2013 for a presentation of that set of empowerments.

[1435] *Tshar chen rnam thar*, 486-487. The year is given on p. 482.

[1436] *Tshar chen rnam thar*, 556-561. The date is given p. 562: *dbus phyogs su lo gnyis la nye bar gzhugs nas lcags byi’i mjug gtsang la chibs kha bsgyur*. “Having stayed two years in Central Tibet, he rode back to gTsang in the end of the iron mouse year (1540).

do away with. According to Tshar chen's biography, bSod nams bstan 'dzin said that there was no sign of success in his subjugation practices, and that this may be due to the fact that the enemy also propitiated Dud sol ma in the protector chapel (*mgon khang*). bSod nams bstan 'dzin is not specific on who the enemy was, but the fact that he too propitiates Dud sol ma, his being in gZhung and the new location of Thar pa gling point to the possibility that the enemy might be a lama from another branch of the rNgog, with whom a competition about true ownership of the transmission may have flared up, possibly rNgog Blo gros dpal bzang of the gTsang tsha branch (Kun dga' grol mchog's master). Informed about this situation, Tshar chen decided to help bSod nams bstan 'dzin. He went to the Cakrasaṃvara temple of Drang srong srin po ri,[1437] where he practiced Dud sol ma for several months. He had many signs of success and of the presence of Dud sol ma. When he came back to Thar pa gling after eight to nine months, rNgog bSod nams bstan 'dzin told him signs of success had appeared. Delighted, he granted him the secret *sādhana* of Dud sol ma, stating that in the rNgog tradition one only gave this practice to someone who would definitely be a holder of the rNgog teachings. After that, Tshar chen dreamt that his negativities were purified, and he felt even more trust and certainty in the lama, considering his subjugation of rNgog's enemy as a guru-yoga practice.

This description of the trouble in gZhung in 1540 suggests that the situation of the rNgog family had deteriorated. Although rNgog bSod nams bstan 'dzin is described as a powerful lama able to aptly transmit the rNgog transmission, he was not unanimously recognized in the valley. If the enemy was indeed his cousin, rNgog Blo gros dpal bzang, it means that there were strong rivalries between the two branches of the family that had contributed to its success for centuries. From a traditional point of view, this means that *samaya*s within the lineage were sorely strained, hence that practice in gZhung and by the people involved could no longer be effective. More generally, if rNgog bSod nams bstan 'dzin entrusts the secret transmission of Dud sol ma to Tshar chen, it means that he does not have any worthy spiritual heir at Thar pa gling, and that he is not collaborating with the sPre'u zhing's abbot the way his ancestors did for centuries. There is no allusion in accounts related to rNgog Blo gros dpal bzang that could confirm the hypothesis of a rivalry with rNgog bSod nams bstan 'dzin, but there is also no evidence of any collaboration between the two, although they lived at approximately the same time.

5.4. Last traces of the rNgog and transmission to Gong dkar chos sde Monastery

Despite this grim outcome, the familial lineage continued for a few decades, albeit at a very low scale, and it is possible that some rNgog heirs became followers of other lineages rather than remaining in gZhung. An example of this is Karma Blo bzang, a disciple of Grub mchog dbang po (1563-1618) and the 6th Zhwa dmar pa Cho kyi dbang phyug (1584-1630).[1438] It is stated in the autobiography of one of his disciples, Kun bzang klong yangs (1644-1696), that

[1437] Akester 2016, 359-362; Fermer 2017, 77. The monastery is located to the north of Gong dkar chos sde, on the opposite side of the gTsang po.

[1438] See Ehrhard 2001a (2013), 229-236, for a biographical sketch based on Karma Blo bzang's biography. There is no mention of Karma blo bzang's rNgog origin in the article, and it is not clear whether or not it appears in the autobiography (an 84-folio manuscript entitled *mKhas grub chen po karma blo bzang ba rnam thar mchod sprin rgya mtsho*).

Karma Blo bzang was from the family (the "bone," *gdung*) of rNgog Chos rdor.[1439] None of the transmissions of this lama, however, are specific to the rNgog tradition.

5.4.1. rNgog 'Jam dbyangs 'od zer

A final trace of the rNgog is found in the record of teachings received by Gong dkar 'Phrin las rnam rgyal (fl. 17th c.). 'Phrin las rnam rgyal's lineage of the male form of *Catuṣpīṭha* comes from rNgog Byang chub dpal, and then rNgog Rin chen dpal bzang (= Rin chen bzang po), rNgog Byang chub dpal grub, rNgog Byang chub grags pa, rNgog Blo gros dpal bzang, rNgog dPal 'byor don grub, and rNgog 'Jam dbyangs 'od zer—all members of the gTsang tsha branch. rNgog 'Jam dbyangs 'od zer gave this transmission to mGon po bSod nams mchog ldan (1603-1659) and Rab 'byams pa Rin chen rgya mtsho from Gong dkar chos sde; the two gave it to Gong dkar 'Phrin las rnam rgyal.[1440]

Nothing is known about rNgog dPal 'byor don grub. His disciple (and possible son) rNgog 'Jam dbyangs 'od zer is the last known rNgog family member living in the gZhung valley. The little we know about him comes from his interaction with mGon po bSod nams mchog ldan (1603-1659), recorded in the latter's biography.[1441] bSod nams mchog ldan belonged to the Sa skya order and was born in the gNas gsar ba family that maintained an incarnation lineage of Tshar chen.[1442] He was based in Gong dkar chos sde for a long time, was one of the 5th Dalai Lama's tutors, and also gave transmissions to the rNying ma master of the 5th Dalai Lama, Zur chen chos dbyings rang grol (1604-1669). Around 1628, rNgog 'Jam dbyangs 'od zer gave to mGon po bsod nams mchog ldan the seven maṇḍalas as well as several other

---

[1439] Unpublished manuscript entitled *Rang gi rtog pa brjod pa kun bzang dgongs ba rang shar zhes bya ba*, 8v: *lo bco lnga 'gro skabs rngog chos sku rdo rje'i gdung chos rje kar rma blo bzang zhes pa* […]. This manuscript was discovered by Charles Ramble in the archive of the Kun bzang chos gling nunnery in 2016.

[1440] 'Phrin las rnam rgyal gsan yig, 57: […] *rngog byang chub dpal ba/ rngog rin chen dpal bzang / rngog byang chub dpal grub/ rngog byang chub grags pa/ rngog blo gros dpal bzang / rngog dpal 'byor don grub/ rngog 'jam dbyangs 'od zer/* [xxx] *de la rtsa ba'i bla ma paN chen bsod nams mchog ldan dang / bla ma rab 'byams pa rin chen rgya mtsho gnyis/ de gnyis ka la bdag gis thob*. At the point marked [xxx], there is a note with an alternative lineage longer than that of mGon po bsod nams mchog ldan (see also DL5 *thob yig*, 1: 193a).

[1441] A khu'chings refers to it, cf. Shes rab rgya mtsho, 833: *mgon po bsod nams mchog ldan gyis kyang rngog ston 'jam dbyangs 'od zer las rngog dkyil bdun gyi dbang rdzogs par thob tshul rnam thar dad pa'i rlabs phreng las 'byung ngo*. For the biography of bSod nams mchog ldan written by the 5th Dalai Lama, see *mGon po bsod nams mchog ldan rnam thar*. His record of teachings received is presently unavailable.

[1442] Dongthog 2016, 162-164; Fermer 2009, xv, n. 3 and 336, n. 1254 (P3256 in TBRC).

transmissions.[1443] bSod nams mchog ldan records going to gZhung sBrel shing in 1657 in order to pay homage to the remains of ’Jam dbyangs ’od zer.[1444]

For what we know, the death of ’Jam dbyangs ’od zer may marks the end of the rNgog’s presence in sPre’u zhing. Nothing certain is known about how the care of the monastery was transferred to Gong skar chos sde, but in all likelihood this happened in the mid-17th century, after ’Jam dbyang ’od zer was dead.[1445] The *Gong dkar chos sde’i gnas yig* states that sPre’u zhing had completely waned in the 17th century, and that the Fifth Dalai Lama entrusted it to mGon po bSod nams mchog ldan (1603-1659).[1446] This is not mentioned in the autobiography of the Fifth Dalai Lama,[1447] and I also do not find any trace of this in bSod nams mchog ldan’s biography. Matthew Akester says that sPre’u zhing became a branch of Gong dkar chos sde at the time of the Gong dkar lama Nyi ma gling Tshul khrims bkra shis, who was a teacher of bSod nams mchog ldan.[1448] The source for this declaration is equally unknown, and this Tshul khrim bkra shis was contemporary with ’Jam dbyang ’od zer. One last opinion, said to derive from oral accounts, is provided in a Tibetan study on sPre’u zhing published in a Tibetan journal in 2012.[1449] According to the authors, at the time of the 5th Dalai Lama, sPre’u zhing was first put under the care of “Gong dkar chos ’khor gling, which was of the same order [than sPre’u zhing].” This refers to Chos ’khor gling, a branch of bDe chen chos ’khor gling, a ’Brug pa bka’ brgyud monastery located on the other side of the gZhung valley. The monks tried to hold regular rituals of the seven maṇḍalas in sPre’u zhing but for some reason

---

[1443] *mGon po bsod nams mchog ldan rnam thar*, 303: *rngog ston ’jam dbyangs ’od zer gyi zhabs kyi rdul dmar dbu’i gtsug tor du bsten nas/ dgyes rdor lha dgu/ bdag med lha mo bco lnga/ rdo rje gur lha zhe dgu/ rnal ’byor nam mkha’ lha dgu bcu rtsa bdun/ gdan bzhi yum bka’ lha bcu gsum/ sgyu ’phrul chen mo lha lnga/ ’jam dpal gsang ldan lha nga gsum ma ste rngog dkyil bdun gyi dbang man ngag gi yi ge ’ga’ zhig ’khrid bcas/ mai tri tri pa’i phyag yig dgu phrugs kyi byin rlabs/ dud sol ma’i gsang sgrub kyi rjes gnang/ gter ston nyi zla sangs rgyas kyi ’pho ba ’jag chugs ma/ tshe dpag med grub rgyal ma’i byin rlabs rnams gsan/ rim gyis ’dar du rdo rje ’chang gi zhabs drung du phebs nas dbang chos ci rigs gsan*.

[1444] *mGon po bsod nams mchog ldan rnam thar*, 367. The year is not completely certain as 1659 (*sa phag*) is indicated on the previous page, but this is the year of bSod nams dpal ldan’s death. It may be wiser to accept that ’Jams dbyang ’od zer’s death occured between 1657 (*me bya*, p. 365) and 1658 (*sa khyi*, p. 368).

[1445] Gene Smith already noted in 1969 that the rNgog lineage disappeared during the 17th century (see his preface to “A Fifteenth Century Tibetan Compendium of Knowledge: the *bSád mdzod yid bzhin nor bu by Don-dam-smra-ba’i-seṅge*” (Sharada Rani, New Delhi. 1969. pp. 5-32.), Smith 2001, 325, n. 740).

[1446] sKal bzang chos ’phel, 93: *phyis dus rabs bcu bdun nang nyams rgud du song ste rgyal mchog lnga pa chen pos gong dkar chos sde’i mkhan thog bzhi pa mgon po bsod nams mchog ldan la gnang zhing dus de nas gong dkar chos sde dgon gyi rgyun bzhugs dge ’dun bkod sgrig mdzad* […]. bSod nams mchog ldan was not Gong dkar chos sde’s abbot however. This may be a confusion with lCang lo can pa bSod nams mchog ldan, who was Gong dkar ba Kun dga’ rnam rgyal’s disciple (see Fermer 2009, 336 and sKal bzang chos ’phel, 86).

[1447] Karmay 2014. The Great Fifth only states that mGon po bSod nams mchog ldan was among those who encouraged him to write his autobiography (p. 18). He mentions several teachings received by him, and that at bSod nams mchog ldan’s death in late 1659, he made many offerings and prayers for “the lama of Gongkar Monastery” (p. 412). In the chapter on “conferring of religious estates and allocating territories,” (p. 429) the Dalai Lama says that “Nesarwa of Gongkar [received] the estates from Sinpori and Sheltrong Shagpa, which were formerly held by Nangchenpa.” This may not refer to bSod nams mchog ldan however, but to the scribe mentioned in Karmay 2014, 524).

[1448] Akester 2016, 266. See Fermer 2009, 183-184, for an identification of Tshul khrim bkra shis.

[1449] Phur bur rdo rje and Ngag dbang dkon mchog. Thanks to Mathias Fermer for drawing my attention to this article.

the situation was judged unsatisfactory, and sPre'u zhing's responsibility was then transferred to Gong dkar chos sde. However this transfer of responsibility may have occurred, from that time and until the Cultural Revolution, the community of Gong dkar chos sde is said to have held in sPre'u zhing an annual event from the 23d to the 29th day of the first Tibetan month called the "sPrel zhing me dbang," during which group retreats (*sgrub mchod*) on the seven maṇḍalas were performed. A retreat center affiliated to Gong dkar chos sde was built on the hill where rNgog Chos rdor is said to have left for Khecara, called dBen gnas ("solitary place") in the rNgog accounts, and dBen gnas bSam gtan gling in later times.[1450]

5.4.2. Pilgrims

The temple of sPre'u zhing and the stūpa of Mar pa's relics continued to attract pilgrims for centuries. One such pilgrim was Tāranātha (1575-1634).[1451] In his autobiography, he records that he stayed for a week in rNam rgyal rab brtan in gZhung, that is to say in the rNam rab village a few kilometers away from sPre'u zhing.[1452] One day, he visited sPre'u zhing. Although Tāranātha may have lived at approximately the same time as rNgog 'Jam dbyangs 'od zer, he does not mention his presence, but only that of Mar pa's relics, of a statue of Chos rdor and another of Dud sol ma. He also visited Mi la ras pa's cave and the solitary place where rNgog Chos rdor departed for Khecara. Later on, he went to the 'Brug pa monastery of Chos 'khor gling, where he met someone claiming to be knowledgeable in the rNgog tradition but knew only about the new 'Brug pa traditions. Thus, even though all rNgog masters had not disappeared yet, it seems that not much was left of the rNgog traditions in the valley apart from Mar pa's relics.

In the 18th century, the rNgog seat received the visit of bSod nams dbang phyug (1660-1731), the abbot of Yang tsher and Tha kar.[1453] bSod nams dbang phyug says that he visited Mar pa's relics in Ri bo khyung lding (sPre'u zhing). Like other visitors, he records being filled with devotion in front of the wonderful religious objects gathered there.

Another visit took place in 1848, when 'Jam dbyangs mkhyen brtse dbang po (1820-1892) visited sPre'u zhing while touring Central Tibet.[1454] In his travelogue, he too mentions the stūpa containing Mar pa's relics, Dud sol ma's statue and the solitary place where Chos rdor departed for Khecara. In his biography, it is stated that when riding up towards sPre'u zhing, he had a vision of Mar pa and Chos rdor granting him his blessing.[1455] This event prompted him to request Kong sprul to compile the rNgog traditions in the KGND.

[1450] Phur bur rdo rje and Ngag dbang dkon mchog, 26; sKal bzang chos 'phel, 93. Jackson 2015, 246, no. 21.

[1451] Tāranātha's *gSung 'bum dpe dur ma*, 1: 240-241.

[1452] See Fermer 2017, 75, for a description of this place and how it led to the expression "rNam rab" replacing "gZhung" to refer to the valley. rNam rgyal rab brtan was the private estate of Kun dga' rnam rgyal's attendant brGya byin pa.

[1453] Snellgrove 1967, 255.

[1454] Ferrari, p. 55 and 134, n 334; Akester 2016, 254 (264-267 for Akester's commentary).

[1455] mKhyen bsrte's biography by Kong sprul, in *rGya chen bka' mdzod*, 15: 506, quoted by Akester 2016, 266.

The 39th Sa skya throne-holder, Drag shul Phrin las rin chen (1871-1935), visited sPre'u zhing ("gZhung sPan zhing") in 1909.[1456] Like earlier visitors, he was impressed by the stūpa with Mar pa's relics, and saw the reliquaries of some of the rNgog and the small Dud sol ma statue, in front of which he makes offerings and prayers. He alludes to motifs found in gTsang smyon He ru ka's biography of Mar pa, stating for instance that Nāropa's six bone ornaments and his ruby rosary are inside Mar pa's statue.[1457] On the way down, he saw many ruined houses and wondered whether they may not be the result of Tshar chen's subjugation of rNgog bSod nams bstan 'dzin's enemy.

The most descriptive account is that by Kaḥ thog Si tu Chos kyi rgya mtsho (1880–1924), who went there in early 1919:[1458]

> […] Up at the seat of the rNgog, there is a yellow four-pillar temple. At its center is a bronze human-sized Buddha statue, flanked by two smaller ones. On top of it is bKa' gdams stūpa said to contain Mi la ras pa's robes. Two armspan [further] there is human-size clay statue of Vajradhara made by rNgog, surrounded by human-size statues of the rNgog family lineage, Mi la ras pa, and the bKa' brgyud forefathers. There are also eighteen statues of various sizes, and human-size ones of Padmasambhava and Śantarakṣita. There are around three hundred incomplete volumes of the *100.000*-[*verse Prajñāpāramitā*], the *bKa' 'gyur*, and others. On the upper floor is a protector chapel of Dud sol ma left in darkness. On the floor below, there is lifesize statue of rNgog and an armspan handmade statue of Dud sol ma. Further down, in the second floor [of a chapel] is the Red Stūpa of Innumerable Relics said to contain the skull of Mar pa from lHo brag. In the temple below are visible a Vajradhara at the place where Mi la ras pa first met rNgog, which looks damaged by water dropping, seven lifesize statues of successive generations of rNgog, clay statues of Mar pa, Mi la ras pa, and others, as well as a lifesize statue of Dud sol ma. I felt sad as they were left without care. Furthermore, the soil is clean and rich, and there are grasses and small trees growing. On the opposite slope is visible a mansion with broken walls at the

---

[1456] *Diaries of Drag shul Phrin las rin chen*, 1: 696-697. He calls the place *gzhung span zhing dgon pa.*

[1457] Cf. Tsangnyön 1982, 190.

[1458] See Everding 2011 for an assessment of this travelogue, and especially p. 368 for the date of the visit to sPre'u zhing; see also Akester 2016, 266. *dBus gtsang gnas yig*, 119-120: *rngog gi gdan sa ltag na lha khang ser po ka bzhi mar/ dbus su thub sku li ma mi tshad che/ g.yas g.yon de las chung gnyis/ rje mi la'i na bza' bzhugs zhes pa'i bka' gdams mchod rten thog sleb gcig/ yang 'dom gang tsam gnyis/ rngog gis bzhengs pa'i rdo rje 'chang sku 'jim mi tshad tsam/ rngog gi gdung brgyad/ mi la / bka' brgyud gong ma skor mi tshad tsam dang/ de las che chung ci rigs bco brgyad tsam/ u rgyan rin po che mi tshad tsam pa* [120] *za hor ma gnyis / 'bum bka' 'gyur sogs ma tshang ba pod gsum brgya tsam/ thog khang dud sol ma'i mgon khang bcas/ grong nag dbus yin/ de 'og thog khar rngog gi sku mi tshad tsam dang/ phyag bzos lha mo dud sol ma khru gang tsam/ ltag tu lho brag mar pa'i dbu thod sogs bzhugs zer ba'i gdung 'bum dmar po mtshal zhugs pa thog so gnyis pa/ de 'og tu lha khang thigs pas 'jigs bzhin pa rngog la mi la thog mar mjal sar rdo rje 'chang sku/ rngog gi gdung rabs sku bdun tsam mi tshad / mar pa mi la sogs 'jim sku dang/ dud sol ma mi tshad tsam snang yang zhabs tog med pas yid skyo'o/ lhag par sa dwangs skyid/ rtswa dang shing tshal cung skyes pa/ pha rir rngog mkha' spyod du gshegs sa yin skad pa'i gzims khang rtsigs ral song ba snang ngo/*

place where rNgog is said to have departed for Khecara. In the gorge below is the cave where Mi la made hail fall.[1459]

5.5. sPre'u zhing today

Names

The origin of the name sPre'u zhing is not very clear. rNgog sources such as the *Rosaries* never give the name of their seat, only referring to gZhung Ri bo, which is the name of the place rather than that of the institution. According to the second dPa' bo, the name sPre'u zhing means "the field of sPre'u," who was a local villager who offered his land to rNgog Kun dga' rdo rje in order to build a temple around Mar pa's relics.[1460] The name is spelled variously in sources, sPre'u zhing, sPrel zhing or sPe zhing. This led to its actual appellation, dPe shing.[1461]

The valley as a whole is still called gZhung or gZhung rnam rab among locals. The new name, rNam rab, appeared sometime after the 15th century but is never used in old textual sources to refer to sPre'u zhing. According to Mathias Fermer,[1462] Gong dkar ba Kun dga' rnam rgyal was ordained in 1463 by Byams pa gling bSod nams rnam rgyal (1400-1475) in the private estate of one of his close attendant located in the middle of the gZhung valley, called rNam rgyal rab brtan. This estate later gave its name to the rNam rab village (now the most important settlement of the valley, where the Dwags po grwa tshang Monastery is located), which in turn gave its name to the valley. The rNam rab valley opens a few kilometers to the south-east of Gong dkar Airport, the most important one of the TAR, located in present-day Gong dkar County (Ch. Gònggá xiàn).

Like almost everywhere else in Tibet, the rNam rab valleu and the sPre'u zhing sub-valley today do not compare to what they may have been in the early 20th century, which was already very different from the situation in the mid-17th century. One first destruction happened when the Dzungars invaded Central Tibet in 1717.[1463] They primarily destroyed rNying ma and bKa' brgyud monasteries, and sPre'u zhing was burned down in 1718 together with the other 'Brug pa monastery in the valley.[1464] Given, however, that the temple remained large and adorned with many statues during Si tu's visit in the beginning of the 20th century, it is likely that the temple was only damaged but not completely burned down. Destructions during the Cultural Revolution (1966-1976) were much more radical, and nothing was left afterwards. rNam rab Ngag dbang thub bstan, the present abbot of Dwags po grwa tshang monastery, who was born in the valley, describes in the *rNam rab Guide* that when the stūpas from sPre'u zhing were destroyed, the villagers saw that there were relics (*ring bsrel*) on the

---

[1459] *dBus gtsang gnas yig*, 119–120 […]

[1460] See above II.3.4.1. and *mKhas pa'i dga' ston*, 779. See Akester 2016, 265, n. 25, for other oral etymologies.

[1461] See rNam rab ngag dbang thub bstan, 176, and Akester 2016, 265, n. 25, for an explanation of the process that led to this name, and the new etymology.

[1462] Fermer 2017, 75.

[1463] See Petech 2013a (1950) and 2013b (1950).

[1464] *rNam rab Guide*, 171; Akester 2016, 266.

bones kept inside.[1465] Everyone was very impressed, and an old man, bKal bzang rnam rgyal, tried to hide them. He was denounced and beaten up, and the relics were dismembered and thrown away. Today, some villagers still have bits and pieces. I was personally shown a very small part of a bone by a Dwags po grwa tshang monk. Statues were crushed, texts were burned, and the temple was destroyed. Although a visit to the seat of the rNgog today does not bring much fresh evidence on its historical past, there are still ruins and oral narratives that can allude to how the valley may have been a few centuries ago. Although it is difficult to assess the reliability of the information provided by the *rNam rab Guide*, it can be seen as the window to the locals' view on their past.

rNam rab in the 21st century[1466]

The bottom of the rNam rab valley, which opens on the south bank of the gTsang po, is a fertile region that produce a high agricultural outcome. The central point of the north-facing valley is the mountain at its center, called the lHa ri (God Mountain). Beyond the passes at the south side of the valley lies the Yar 'brog g.yu mtsho, the large turquoise lake said to embody Tibet's life force. There are several small villages in the valley today. The most important one, rNam rab zhol, holds Dwags po grwa tshang, a Sa skya monastery said to be founded by Dwags po paṇ chen bKra shis rnam rgyal in the 15th century.[1467]

According to the *rNam rab Guide* (p. 180), when one ascends the rNam rab valley from rNam rab zhol (which is at the mouth of the sPre'u zhing valley) one first comes across the ruins of Se lung monastery, which was the residence of rNgog Chos rdor's first guru, dGe bshes sGyer chung ba. On a mountain south-east from Se lung is the residence of one of the heirs of the rNgog clan together with a big stūpa, which partially remains today. On the north slope is a blessed cave with many small stūpas nearby. Three kilometers towards the south (p. 182), a little bit higher in the valley, is a place called "Ri chung sgang" or "Ri chung gdangs," which was the residence of one of the thirteen generations of rNgog, called bSam gtan gling. To the west, there are the ruins of the residence of another rNgog and of a small monastery. Nearby,

---

[1465] *rNam rab Guide*, 174-175. Ngag dbang thub bstan consulted many written sources for his account and is an expert of the region. Many of the places inhabited by the rNgog, however, are deserted for centuries and none of them are mentioned in old sources, so the account understandably has to rely on oral, generally vague, accounts. It is not clear whether the "biography of rNgog ston" (*rngog ston gyi rnam thar*) mentioned by the author is an unheard-of biography of rNgog Chos rdor (which seems unlikely). The description given in the *rNam rab Guide* nonetheless provide an informed local view on the valley and its history, hence is a useful source to relate to the geographical implantation of the rNgog.

[1466] I rely for this presentation on the information provided by Mathias Fermer, who visited gZhung and Gong dkar for his research on the historical geography of the region (Fermer 2017), on Matthew Akester's descriptions of sPre'u zhing (Akester 2016, 264-268), and on my own fieldtrip in rNam rab in June 2014. I also rely on three modern Tibetan writings: sKal bzang chos 'phel (date unknown), a picture book with some text on Gong dkar monastery and a chapter on affiliated monasteries; the *rNam rab guide* (rNam rab Ngag dbang thub bstan 2014); and a Tibetan journal article (Phur bur rdo rje and Ngag dbang dkon mchog 2012). Thanks to Mathias Fermer and Matthew Akester for sharing their work and expertise with me.

[1467] *rNam rab Guide*, 24-25. On this figure, see Jackson 1989, 9-10, and in section II.4. (he received the seven maṇḍalas from Byang chub dpal).

there are a few stūpas. On the mountain above, there is a cave where the Dwags po Grwa tshang monks used to go to make rain-falling rituals.

Further south, near a village in the right upper part of the valley, is a place called Sras thog bla brang (p. 184). It used to be a large ’Brug pa bka’ brgyud monastery affiliated to bDe chen chos ’khor gling lower in the valley and is now a large ruin. The old villagers say that it was there that rNgog mDo sde stayed, hence the name “residence of the first son” (*sras thog [ma] la brang*). Given its location up in the valley and within view of the pass to the Yar ’brog g.yu mtsho, it may have been an important place of passage. Today, no reconstruction is allowed and only ruins remain. On the way down towards the gTsang po (p. 185), on the west side of the right upper valley, are the ruins of the residence of another rNgog, an unknown Phying ba rdo rje (?), called Sras mgon bla brang. Around it are many caves where some of the rNgog are said to have meditated. Down in the valley, in a lateral valley opposite sPre’u shing, is the village of Bog. In the mountains to its north-west is a place called ’Bu gdang (p. 187), which, some elders say, was rNgog Chos rdor’s birthplace.

Finally, at the entrance of the rNam rab valley, on the west side, is a village called Thar pa gling. In the *rNam rab Guide* nothing is said about the rNgog at this place, and none of the villagers I questioned knew anything about any of them staying in that village. As this was the name of the place where rNgog bSod nams bstan ’dzin resided, it is not impossible that the monastery was there. Today, there is a small temple with an important shrine to Dud sol ma (as most temples in the valley) maintained by Gong dkar chos sde.[1468]

All the places described until now are only ruins. Although the rNgog obviously left a lasting trace in the whole of the gZhung valley, the two seats created in the late 14th and late 15th century (Brag dmar chos ’khor gling and Thar pa gling) cannot be accounted for with any certainty, and places associated with the rNgog may as well have nothing to do with them. One place, however, that can be located is the “higher seat” sPre’u zhing, located in a north-west facing valley opening on the east side of the rNam rab valley (pp. 172-180).

To get there, one first crosses the village of rNam rab zhol, where the Dwags po grwa tshang Monastery is located, and then enters a side valley approximately 700 meters wide at its mouth. There is a gorge in its middle, some ten meters deep at places. When I was there (late June 2014) only a small stream flowed, but sometimes the current can be violent, as evidenced by the breadth and depth of the gorge. About three kilometers upstream, there is a small hamlet in which the temple of sPre’u zhing has been rebuilt, at an altitude of 3975 m, surrounded by a dozen houses.[1469]

If one goes further up the gorge, there is another side valley to the right. Google Earth (see map below p. 447) shows that there are ruins there, but I have been unable to visit them. This is the possible location of gZhung Ri bo khyung lding, Chos rdor’s house and later that of the

---

[1468] See reference in Jackson 2015, 245, no. 6: Thar pa gling lha mo khang (Thar pa gling, Gong dkar rdzong). On the hill above the village is a cave that is regarded as a residence of Atiśa (see Akester 2016, 268).

[1469] Latitude: 29°12’38.33"N; longitude: 90°57’51.15"E.

rGyal tsha branch. Several rNgog, including Chos rdor, had visions of Nairātmyā at that place, and a shrine was erected.[1470] Several names and etymologies are provided for the place: the Second dPa' bo states that since a *garuda* was seen hovering in the sky directly above it, the temple was called 'Hovering Garuda' (*Ri bo Khyung lding*).[1471] 'Be lo Tshe dbang kun khyab considers that the residence was built over a round meadow which resembled a garuda, hence was known as "the round garuda" (*zlum kyung*).[1472] Ri bo khyung lding is generally referred to as the "lower seat" (*gdan sa 'og ma*), although it was older, and, if my hypothesis is correct, geographically higher, which indicates the leadership of the gTsang tsha branch in later generations. After being deserted by the rNgog, this place became a rDzog chen retreat place affiliated to the rDo rje brag Monastery, a large rNying ma monastery on the other side of the gTsang po.[1473]

The "higher seat" (*gdan sa gong ma*), sPre'u zhing, founded by Kun dga' rdo rje was located where the new temple now stands.[1474] After being completely destroyed during the Cultural Revolution, a small temple was rebuilt in 1985. A villager called Nang chung had preserved a statue of Vajradhara "Blazing with majestic brilliance" (*gzi 'od 'bar ba*) and another of Dud sol ma, which he returned to the temple. In 2012, another temple was erected as the first was about to collapse. It is made up of a three-storey central temple and a few rooms enclosing the courtyard. In 2014, the main shrine was still empty. It is flanked by two chapels, with the small statue of Dud sol ma on the left, and the statue of Vajradhara, a human-size statue of rNgog and some texts on the right. Although the Chos rdor statue looks new, the other two may be the ancient ones rescued and heavily repaired so as to look new. The statue of Dud sol ma, in particular, is small when compared to the other statues in this temple and other Dud sol ma statues in nearby temples, so it is not impossible that it is an ancient statue. The rebuilding and care of the temple is under the responsibility of the Gong dkar chos sde Monastery. Two nuns from mNga' ris were in charge of the daily rituals and maintenance of the place in 2014. At the time of writing, the temple may be complete, and it is therefore possible that more of the religious items and relics in the possession of villagers have been returned to the temple.

About hundred meters down the valley is a ruin of what used to be a large house. According to Matthew Akester,[1475] this is known locally as the "house where (Mar pa's wife) bDag med ma was born," also mentioned by Kaḥ thog Si tu. I do not find any evidence for this story about bDag med ma being born in the gZhung valley. It is more likely to refer to rNgog Chos rdor's wife dPa' mo chos mo, the sister of sPa lBa ba can. At this level of the gorge, around fifty meters away from the ruins of the house, there used to be Mi la ras pa's cave. A dam was

---

[1470] *mKhas pa'i dga' ston*, 777. Akester 2016, 264 says that "This temple was built on the site where Ngok and his disciples had set up a platform for the arrangement of deity Maṇḍala-s and [had] once seen visions of the master's tutelary Nairātmadevi with a retinue of 15 goddesses." See also description in *rNam rab Guide*, 173, where the name gZhung gdang or gZhung steng is provided.

[1471] *mKhas pa'i dga' ston*, 777.

[1472] *Zla ba shu shel gyi phreng ba*, 1: 71.

[1473] *rNam rab Guide*, 173.

[1474] *rNam rab Guide*, 172-176.

[1475] Akester 2016, 266.

built in the late 1990s to protect it but it was flooded away in the beginning of the 21st century.[1476]

On the mountain on the opposite side of the gorge, on the southern side of the valley, is the place where rNgog Chos rdor made three koras, left a foot-print on a boulder and flew away to Khecara.[1477] There used to be a large monastery but only ruins remain today. There are also the rests of several stūpas. One of them was known to be rNgog Chos rdor's meditation spot and the place where he would go to make retreats. In the middle of this quiet and beautiful place grows a large walnut tree in which bird sing, reminding one that this now deserted and forlorn place used to be the heartland of the rNgog pa bka' brgyud transmission.

[1476] *rNam rab Guide*, 177.

[1477] *rNam rab Guide*, 178-180.

Conclusion

I started my research on the rNgog lineage wondering why the rNgog seemed so central in the transmission and codification of Mar pa's tantric legacy while generally being pictured as having a supporting role only. The most telling anecdote to illustrate this seeming paradox is the way I presented my dissertation topic to people having some familiarity with Tibetan Buddhism but not a far-reaching understanding of its history. I typically started with gTsang smyon's story in the *Life of Mi la ras pa* of Mar pa not teaching Mi la ras pa, and the way Mi la ras pa left Mar pa's home in desperation. When he left, I said, he went to visit rNgog Chos rdor, another disciple of Mar pa. There, he practiced for one year on *Hevajra* but to no avail. Mi la ras pa finally returned to Mar pa's seat together with Chos rdor when it was discovered that Mar pa had not allowed him to leave, and he was finally granted transmissions. Afterwards, he became the famous yogi that even people not closely associated with Tibetan Buddhism know. This rNgog Chos rdor, I continued, started a hereditary lineage that preserved and transmitted Mar pa's teaching, and particularly *Hevajra*. Nowadays, this lineage's transmissions are the main ones compiled in one of Kong sprul's five treasuries, the *Treasury of bKa' brgyud Mantras*, and as such represent one of the most cherished traditions of the bKa' brgyud schools in general and their common legacy. So, I concluded, I am writing the history of this religious lineage, called rNgog pa bka' brgyud and sometimes Mar rngog bka' brgyud, as well as the history of the hereditary rNgog lineage.

The two names of the rNgog lineage, rNgog pa bka' brgyud and Mar rngog bka' brgyud, epitomize the place occupied by the rNgog in the Tibetan religious landscape. The rNgog lineage is the one that seemingly transmitted Mar pa's teaching the most faithfully, not mixing his teaching with that of others and continuing Mar pa's style. I say "seemingly" because not much is known about Mar pa's teaching that is not mediated by later lineages, and especially the rNgog one. Various sources like Mar pa's biographies written in different orders and his works now available in several editions indicate that indeed Chos rdor continued his master's legacy without changing its style, except for the *Nāmasaṃgīti* transmission that he received from someone else. Like Mar pa, rNgog Chos rdor and his heirs ranked the *Hevajratantra* highest among their transmission and relied on Dud sol ma as their protective deity. The lineage was exclusively known for its transmission of practices associated with the creation and perfection phases of the tantra, and among the later the cycle of merging and transference, that is to say the six doctrines according to the *Hevajratantra*. This adherence to Mar pa's teaching and the symbolic power accrued from it was materialized by the presence in the rNgog seat of the greatest part of Mar pa's relics. Later, in the historiography of the rNgog lineage, it was also evidenced by the fact that Mar pa's biography and genealogy started those of the rNgog.

The rNgog interpretation of Mar pa's teaching was of course not the only one. There were in the 12th century several other traditions that claimed descent from him. An interpretation that may have been quite similar to that of the rNgog was that of Mes ston, also centered around

Hevajra but that did not continue independently more than a few generations and for which no historiography is known. Another was Mi la ras pa's, followed by the sNyan rgyud lineage, with several sub-currents but two main figures in the early 12th century in the persons of Ras chung pa and Ngam rdzong Ras pa. As their name indicate, they were *ras pa*s, cotton-clad yogis, who emphasized the practice of *Cakrasaṃvara*, *Vajrayoginī* and the six doctrines of Nāropa. Yet another movement was that of mTshur ston, focusing on the *Guhyasamāja* practice and exegesis. The exclusively tantric character of Mar pa's legacy embodied by these diverse currents evolved with the progressive importance taken by Mi la ras pa's disciple sGam po pa. Unlike other lineages that were non-celibate, sGam po pa was a monk and founded a monastery, uniting Mar pa's legacy with that of the bKa' gdams pas. With the stabilizing influence of a seat that was also a monastery and a more progressive teaching suited for a larger audience, sGam po pa attracted many disciples. They also initiated their own movement largely characterized by monasticism, and bKa' brgyud orders soon proliferated, each with a distinct style but all emphasizing their three common forefathers, Mar pa, Mi la ras pa and sGam po pa. With time and the many biographies emphasizing these three written in these Dwags po bka' brgyud lineages, the other movements lost in visibility, eclipsed by the number and institutionalization of sGam po pa's disciples' lineages.

Although rNgog masters adapted to the trend of monasticism that characterized Tibet from the late 12th century onwards, they remained a compact organization with a religious filiation mostly regulated by kinship. As tantric masters, however, they had many disciples not belonging to their blood, so that the religious lineage was progressively absorbed in other orders as the hereditary lineage was losing its symbolic power. This process of diffusion of the rNgog tradition within other orders started early, and important lineages were transmitted outside of the family already from the 13th century although the continuity was also kept within the lineage. An example is the *Hevajra* lineage held by the Third Karma pa Rang byung rdo rje (1284-1339) that exited the rNgog family after Kun dga' rdo rje.[1478] Other examples are the lineages of *Catuṣpīṭha Jñāneśvarī* and *Nāmasaṃgīti* that exited the family transmission after rNgog mDo sde but reentered at a later stage. The last rNgog lama holding perfectly all transmissions was rNgog Byang chub dpal in the early 15th century. He lived at a vibrant time and place, and played an instrumental role for the integrity and continuation of Mar pa's legacy, just like mDo sde did before him. Afterwards, however, the decline of the family line accelerated and the rNgog transmissions were not seen as being quintessentially transmitted within the rNgog kinship lineage. Although Byang chub dpal had a son who took responsibility of the seat, he also granted the rNgog transmissions to several hierarchs who were among the most powerful of the period, such as 'Gos Lo tsā ba, Lo chen bSod nams rgya mtsho and the Second 'Brug chen Kun dga' dpal 'byor, to mention only the most important ones. The former two taught to the 4th Zhwa dmar, who in turn was one of the most powerful political agent of the early 16th century, as well as an important exponent of the rNgog teachings. Byang chub dpal's great-great-grandson Blo gros dpal bzang gave several transmissions to Kun dga' grol mchog (1507-1565), and another one, bSod nams bstan'dzin, gave Dud sol ma to Tshar chen Blo gsal rgya mtsho (1603-1659). Despite these late masters

[1478] See KGND, 1: 19 & 21.2-5 and Zh4 gSung 'bum, 6: 707. A painting of this lineage is available: https://www.himalayanart.org/items/61401.

still being able to transmit accurately the rNgog traditions, they did not have much influence. Progressively, the religious capital of the rNgog benefitted others, and their social capital decreased. A consequence was the progressive loss of funding, the probable tensions that may have arisen from this, and the final extinction of the hereditary lineage once all its capital, including the human one, was exhausted.

With regards to the historiography of the rNgog lineage, the examination of sources showed that in all likelihood all historical narratives composed within the lineage are today available, except for Rin chen bzang po's works, considered to contain a biography of Mar pa and one of Rin chen bzang po himself. Given that all later Tibetan sources either rely on the *Rosaries* or on texts derived from them (chiefly the *Deb ther sngon po* and the *lHo rong chos'byung*), we may infer that no further significant document ever existed, or if it did, did not spread. Thus, this dissertation can be considered an exhaustive gathering of historical source material. The fact that all the available data has been retrieved does not mean, however, that we know everything about the rNgog. As regularly remarked in the previous pages, many aspects are left to be studied and analyzed, and many more will probably remain in the dark.

A first avenue of research, particularly related to the present study, would be to examine more systematically biographies of individuals related to the rNgog. I do not expect that this would be very rewarding with regard to early masters, but from the 15th century onwards, biographies of lamas evolving in the political center of lHo ka become more detailed. It is also not excluded that later masters may have interacted with more disciples that I am now aware of.

Another direction that has not been followed at all in the present dissertation is a religious study of the rNgog transmissions themselves. Several angles could be adopted. One could for example compare the rNgog exegetical tradition of *Hevajra* with the Mes, Ram or even Sa skya traditions. One could as well select one tradition and examine its evolution in time. One could for instance take the *gSan ldan* maṇḍala ritual and compare the Indian version by Agrabodhi with those of rNgog Zhe sdang rdo rje, rNgog Rin chen dpal bzang po, Tāranātha, and Kong sprul. More importantly, the rNgog transmissions themselves were only superficially studied in the present work and only from external perspective. No effort has been made to understand the iconography, the methods of practice of the conceptual framework of these transmission, in a word what they really are about. Much more needs to be discovered as well about the protective deity Dud sol ma and the perfection phase practices called merging and transference, for instance. As this concerns two very complex topics, this might be the object of complete dissertation.[1479]

Finally, more systematization and theorization could be applied to the present material and related data. The question of lineage for instance is ubiquitous in Tibetan Buddhism. It is often from this perspective that case studies are approached, and one finds in several dissertations and books, like in the present one, a chapter or section on lineage. My own research did not lead me to an exhaustive presentation of the topic, however, and such could

[1479] Like the one undertaken by Casey Kemp on luminosity for instance.

be a rewarding enterprise. The related subject of lineages of ordination, that exist in other Buddhist countries also seems to be understudied, and one could perhaps compare from the viewpoint of comparative anthropology or sociology different types of lineages in various Buddhist cultures, or esoteric traditions in general. With regards to the theoretical tools developed by Pierre Bourdieu, my exploration of them proved, at least for me, satisfying, and I feel a lot could be gained from an attempt at constructing properly the religious field of a specific period in the Tibetan history. This probably could not be achieved with periods predating the 15th century, but may be possible afterwards. It is my hope that I or other scholars may in the coming years take up some of the threads sketched in the present work.

To conclude, I would like to emphasize the joy I experienced while bringing back to life the memory of a few men who labored with their body, speech and mind to bring to Tibet and to transmit during centuries teachings what they saw as powerful methods to become buddhas. A century and a half ago, Kong sprul saved those cycles from oblivion by collecting, practicing, editing and teaching them. Today, however, the stream flowing from the rNgog transmissions, and even from Mar pa's heart-practice of *Hevajra*, remains weak. Several individuals worldwide are presently trying to revitalize this practice.[1480] It is my wish that my work, concluded during the 150th anniversary of my school, the Ecole Pratique des Hautes Etudes in Paris, may contribute to those efforts and generate a proper knowledge about the Mar rNgog lineage, thus participating in its further spread, while inscribing itself in the research framework of French University!

[1480] See the website http://mar-ngok.org/ (accessed on February 27, 2018).

APPENDICES

Appendix 1: Critical edition and translation

Notes on the transcription:

This is a critical edition with ST1 as a base, supplemented with the variants in ST2. Condensed forms are uncondensed and underlined. Words between parentheses are notes, generally added between lines or on the following line.

- Black: common basis of ST1 and ST2, with ST1 as the core text.
- *Italics*: only in ST1
- **Bold**: only in ST2

Further conventions :

- ṁ: abbreviated m with a superscribed circle.
- 1,2,3: Tibetan numerals transliterated with roman numerals.

I did not edit the spelling of either ST1 ou ST2, which systematically differ on some words. When the reading of ST2 was obviously better than that of ST1, ST2 was placed in the main text and ST1 in notes. When the two versions are very different (the religious lineages and the biography of Seng ge sgra), ST2 is given as a note.

[ST1, 1.1] *bla ma rngog pa yab sras rim par byon pa'i rnam thar rin po che'i rgyan gyi phreng ba bzhugs pa yin no//*

[ST2, 25.1] **rje mar pa nas brgyud pa'i rngog gzhung pa yab sras kyi bla ma'i rnaṁ thar nor bu'i phreng pa bzhugs so:**

[ST1, 2.1] *bka' brgyud kyi bla ma rnams la phyag 'tshal lo//*

[ST2, 26.1] **dus gsum rgyal ba kun gyi ngo bo sprul pa'i sku// 'gro ba 'dren pa'i lcags skyu dpal ldan thugs rje can// bka' rgyud rin chen 'dus pa'i gtsug gi nor bu'i rtog// rje btsun mar rngog (dkar rgyud rnaṁs kyi gtso bo yin pas) zhabs la gus pas phyag 'tshal lo//**

[ST1, 2.1] rje btsun dpal ldan rngog pa yi// mi[1478] rgyud chos rgyud rim pa dang[1479]// chos kyi zhus tshul btsams tshul sogs: lo rgyus zur tsam bri bar bya// *de la* rje btsun mar pa ni: mar lungs

[2.2] na: mar pa'i mes po: mar pa sha ru rtse bya ba cig la: sras mar pa khri 'jaṁ bya ba cig yod: de la sras 3: dkon mchog: gyal legs: dge tshog[1480] ral bu'o: dkon mchog la sras 3: shes rab rin chen: shes rab gyal: shes rab dkon mchog: shes rab rin chen la sras 3: grags pa *(sras mar pa mon nag pa bya ba yin no)*: dbang

[2.3] phyug 'od zer *(yab)* (yum rgya mo blos lcam): rdor blo'o: dbang phyug 'od zer la sras 5: dbang phyug rgyal: dga' ba: rje *btsun* mar pa *(bar pa)*: a mi rba[1481] ba rdor rgyal: 'brog la skyes: **a mi** rdor rgyal gyi brgyud pa mar pa me la[1482] skyabs la thug go// rje *btsun* mar pa'i *jo mo lcam bu lhum bza' ho re* **(yum bdag med ma)** la sras 2:

[2.4] **dar ma** mdo sde dang: dar ma bsam stan no **(bsam stan dpal yang ces)**: mdo sdes ltad mo la (zhang po'i chang sa la) byon bas rtas bsdabs[1483] nas grongs: jo mo phyag thung **ma** la sras 5: dar ma dpal: sba[1484] can zang nge: ngan ne: ston pa dge 'dun: bya[1485] rid 'khor lo **dang lnga**'o: **ja rid min pa** rje btsun la rgyud pa mi

---

[1478] ST2, 26.2: *gdung*.

[1479] ST2, 26.2: *yi*.

[1480] ST2, 26.3: *rtsog*.

[1481] ST2, 26.4: *sba*.

[1482] ST2, 26.4: *mes*.

[1483] ST2, 26.5: *gdabs*.

[1484] ST2, 26.5: *sba*.

[1485] ST2, 26.5: *ja*.

Rosary of Precious Ornaments – Lives of the Successive rNgog pa Masters, Fathers and Sons (ST1)[1486]

Rosary of Jewels – Lives of the rNgog masters from gZhung, Fathers and Sons, from Lord Mar pa's lineage (ST2)[1487]

[Title and homage]

[ST1, 2.1] *I pay homage to the bKa' brgyud masters!*

[ST2, 26.1] **Bodies of emanation who are in essence all victorious of the three times,**
Glorious compassionate ones, iron hooks guiding beings,
Top ornaments of the crest jewel gathering all the bKa' brgyud jewels,
I bow down with respect to the feet of the Venerable Mar rNgog (who are prominent among the dKar rgyud).

I will write briefly the history
Of the successive familial and spiritual lineage's [holders]
Of the venerable and glorious rNgog pa
And of the way they received and composed teachings.

[I. Mar pa]

[2.1] As for the Venerable Mar pa: in the Mar Valley, one called Mar pa Sha ru rtse, of Mar pa ancestry, had a son called Mar pa Khri 'jam. He had three sons, dKon mchog, rGya legs and dGe tshogs ral bu. dKon mchog had three sons: Shes rab rin chen, Shes rab rgyal and Shes rab dkon mchog. Shes rab rin chen had three sons: Grags pa (whose son was called Mar pa Mon nag), dBang phyug 'od zer ([Mar pa]'s father; his mother was called rGya mo blos lcam), and rDor blo. dBang phyug 'od zer had five sons: dBang phyug rgyal, dGa' ba, the Venerable Mar pa (the middle son), A mi rba ba rdor rgyal et 'Brog la skyes. **A mi** rDor rgyal's lineage went down to Mar pa Me la skyabs.[1488]

The Venerable Mar pa had two sons with his wife *lCam bu lHum bza' ho re* (**Yum bDag med ma)**: **Dar ma** mDo sde and Dar ma bsam gtan (**also called bSam gtan dpal**). mDo sde, having gone to a party (for his uncle's wedding), died falling off a horse. His wife Phyag thung **ma** had five sons: Dar ma dpal, rBa can zang nge, Ngan ne, sTon pa dGe 'dun, and Bya rid 'khor lo. **Apart from Ja rid,** the Venerable did not have any descendant

[1486] ST1, vol. 22: 1-24; *rNgog slob brgyud dang bcas pa'i gsung 'bum*, vol. 1 (222), pp. 1-34. Edited in Walther 2012, 59-86.

[1487] ST2, 22: 25-50; *rNgog slob brgyud dang bcas pa'i gsung 'bum*, vol. 1 (222), pp. 35-68. Edited in Walther 2012, 31-58. German translation in Walther 2012, 89-130.

[1488] This sentence is quite unclear. In ST2, one finds the name "Mar pa mes skyabs," and in ST3 "Mar pa me skyabs." It may be the name of rDor rgyal's son and heir, but nothing more is known about him or his father.

[2.5] gda'o (sras rnaṁs sngon la grongs nas)[1489] (tsha mo 2 las): rje btsun *mar pa* de spe[1490] sar *bdag* mo'i ling ba (sgang gi stod)[1491] bya ba der sku 'khrungs skad: sku nas gzhon pa'i dus su: thugs gtuṁ pa cig byung: *(yab yuṁ 2 kyis dgos pas 'dis na ma cig kha mchu dang sbyor bar 'dug de ba slob gnyer cig la btang na shed bye ba cang srid daṁ snyaṁ pa byung ngo:)* thong mkhan yong ba'i dus na ling ba bar du (nam ma langs pa la) zhing smos pas:[1492] sna khrid ma legs par glang gis bla ma

[2.6] rbab[1493] du skyur: glang la rdo rgyab pas sna khrid kyi mgo**'** la phog nas shi: (da nga mi khyur[1494] mi tshud pas:) *der skyo ba drag po cig skyes nas* nga rang chos la 'gro dgos (gar 'gro bsams pas)[1495]: de'ang[1496] khams su 'gro

[2.7] snyam bas: khams pa dbus su yong (slob gnyer la) bar 'dug dbus su 'gro snyam bas dbus pa rtsang[1497] du 'gro bar 'dug pas: rgyags thes bzang po khyer nas[1498] (la rta nag po **bzang pa** cig: zab chen yug cig: seng **ldeng** gi sga[1499] cig: *g.yu rnying cig* rnams **kyis gtso byas pas**:) la stod **mang dkar dril chen** du (**dpal** myu gu lung tu[1500]) *byon nas:* bla ma 'brog mi **lo tstsha ba** dang: mgos **lo tstsha ba** 2 dang 'byal[1501] bas: khong **rnaṁs 2** yang

[2.8] chos **bka'** la dam par byung nas: *rje btsun gyis*[1502] mgos la **'grel pa** sgron gsal *m*nyan: sgron gsal la yig sna mdzad[1503] nas rgyud bshad pas shes par byung *nas*: rje btsun *bla ma*'i thugs

[**3.1**] dgongs la *(bod du dka' las 'di tsam byed pa bas)* khong yang lho bal du thug pa yin: nga rang yang rgya gar[1504] du 'gro dgos snyam nas: **phyag sdzas rnaṁs gser du sgyur nas: bla ma** 'brog mi **lo tstsha** la *(sgra skad rnaṁs slabs te)*: bdag lho bal du 'gro bas: khyed kyis dgyes rdor la 'gyur mdzad pa de yang zhu: gtor ma cig kyang btang bar zhu byas pas *(nas de nub gtor ma cig mdzad nas:)* de rung gsung: sang

[3.2] *sang* bzhud khar *da* khyed bal po phaṁ 'thing[1505] ba bya ba cig yod zer der[1506] 'gro'am gsung[1507]: de nas bal yul du byon: bal po spyi ther ba la gdan bzhi zhus so *(bdag gdan bzhi de zhus: gdan 4 char mkhyen pa jo bo na ro paṇ chen min pa med gsung)*: de nas pham 'thing du byon: bla ma na ro pa'i slob ma: bla ma pen dha ba[1508] bya ba

---

[1489] This note is added in the main text in ST2, 26.5: *ja rid 'khor lo min pa sngas gzhan rnaṁs sngon la grongs nas.*

[1490] ST2, 26.6: *dpe'*.

[1491] This is in the main text in ST2, placed before *dpe' sar*.

[1492] ST2, 26.6, the phrase is quite different: *na ma langs bar du lings pa stos su zhing smos pas*.

[1493] ST2, 26.6: *sbab*.

[1494] ST2, 26.7: *gyur*. The sentence is in the main text in ST2.

[1495] ST2, 26.7: the note is replaced by *dgongs*.

[1496] ST2, 26.7: *dang por*.

[1497] ST2, 26.7: *gtsang*.

[1498] ST2, 26.7: *g.yu mthong bas nyams dga' dang 1*. The provisions are indicated in a note in ST1 but in the main text in ST2.

[1499] ST2, 26.7: *rga*.

[1500] ST2, 26.7: *gi dgon par*.

[1501] ST2, 27.1: *'jal.*

[1502] ST2, 27.1: *bla ma*.

[1503] ST2, 27.1: *byas.*

[1504] ST2, 27.2: *lho bal.*

[1505] ST2, 27.3: *gting*.

[1506] ST2, 27.3: *de' drung du*.

[1507] ST2, 27.3: *zer*.

[1508] ST2, 27.3: *spen dha*.

(from any of his two wives) (as his sons died before [him]).

It is said that Mar pa was born in Western sGang, in a [place] called bDag mo'i ling, in sPe sar. When his body was still young, his mind was fierce. (His parents thought that he would at one point meet with some dispute, and they wondered whether it was possible that he would develop intellectually if they sent him study.) When a plowman came and was mowing in the middle of a field (where the grass grows), he was guiding well and the ox stumbled in front of the master. He threw a stone at the ox but it hit the head of the plowman, who died. ("Ah, I do not belong to mankind!) [thought Mar pa] with great sorrow. I must go to the Dharma!" (When he wondered where to go), he thought he would go to Khams. As the Khams pa were coming to dBus (to study), he thought he would go to dBus. As the dBus pa were going to gTsang, he brought the best provisions (a black horse, some silk of great value, a teak saddle and an ancient [piece of] turquoise) and went to (Myu gu lung) at **Mang dkar dril chen** in La stod, where he met lama 'Brog mi **Lo tsā ba** and mGos **Lo tsā ba**. As **the two** were sparing with teachings, the Venerable listened to the commentary [called] *Pradīpoddyotana* from mGos. He did various writings on the *Pradīpoddyotana*, and came to know it with an explanation of the tantra. The venerable master then thought: [3] "(Instead of enduring such hardships in Tibet), he ['Brog mi] went to Nepal; I too should go to India!" (Having learned languages), he told 'Brog mi: "As I am going to Nepal, may I request from you the *Hevajra* translation you made? Could you also make a gtor ma [ritual]?" ['Brog mi] assented, (and offered a gtor ma in the evening). He told [Mar pa]: "When you leave tomorrow, there is a Newar called Pham 'thing pa: go to him!"

Then, [Mar pa] traveled to the Nepal Valley. He requested *Catuṣpīṭha* from the Newar sPyi ther ba (who told him that there was no one but the knower of all four *Pīṭha*s, the Mahapandita Nāropa, who had that *Pīṭha* that he was requesting from him).

Then, he went to Pharphing, where he requested teachings (on Kriya cycles) from a disciple of master Nāropa, the master Pen dha ba.

[3.3] la chos (kri ya'i skor rnams) zhus : 'bul ba gser srang[1509] bzhi phul bas: bla ma mnyes nas: nga[1510] rgya gar du 'gro bar zhu byas pas rung gsung nas[1511]: 'bri[1512] ka ma la shi la'i gnas **b**stan cig dang: rje btsun 2: bla mas

[3.4] sgrags[1513] nas btang bas: de'i dus su dus mtshungs pa'i paṇḍi ta chen po bzhi yod pa la: **(sa skya pa ltar na: mkhas pa sgo drug du bzhed de: de bzhi'i steng su bram ze rin chen rdo rje dang: mkhan po dznyā na shrī mi tra bsnan pa'o:)** shar na ratna a ka ra shanti ba (seṁs tsaṁ pa: lho na ngag gi dbang phyug grags pa **(sgrol mas dngos su byin gyi slab pa)**: nub na shes rab 'byung gnas sbas ba**'i blo gros (sgra tshad ma la mkhas gsung)**: byang na na ro paṇḍi ta **(theg pa thun mong min pa'i skor la mnga' mnyes gsung ngo:)** dang bzhi 'dug pa la: (pu la ha rir byon nas:) na ro pa la chos zhus pa la sogs pa'i lo rgyus

[3.5] mang du gsung ngo// **zhib du rnam thar na gsal lo**:[1514] //de'i slob ma bla ma rngog chos rdor ni: rngog gi mes po rngog rje[1515] zings po rje (lha tho tho ri snyan shal dang dus mtshungs su:) zhes bya ba cig: steng gi lha ('phrul dga'i) las chad: sdzus skas rim pa dgu la (sems can gyi don la dgongs nas:) zhabs kyis rten te dog pa phab (kha ba can gyi 'jongs g.ya' ltum po[1516] bya bar): rus **kyi** phyi mo bzhi las: stong du rtogs: de las (phye bas[1517]) 'dzom rus dgu'i nang nas rngog rje'o: (de las gyes pa sgro gnya' dang: rma dang: rka ba dang: gan dang: lang pad dang: dar dang: lang 'gro dang: bya rje dang: snyad rje dang: dernaṁs rngog las gyes pa'i rus so:)[1518]

[3.6] de las stong 'dzom rngog las skyes pa'i sras: rngog tsan dho re khris 'jaṁ:[1519] de'i sras rngog rtag snyan gzigs:[1520] lho bal gyi dpon

[3.7] du bkos ste: thams cad kyis de'i thugs bzung nas: stag gzig gi yul nas skor bas kyang che ste: **bzhugs khri lcags kyi 'khrul 'khor can dang: rnge rngog srin bal gyi rgyab yol can dang: dngul bya nyi ma'i rgyan cha can dang: dngul rga gser gyi ya lad can dang:** gser g.yu: dar zab: mu tig: rin po che la sogs pa'i dpung chen po phul bas mnyes nas: yig tshang gser gyi yi ge chen po btsal to// de'i sras

[3.8] rngog dpal khroṁ gyis srong btsan sgaṁ po'i[1521] sku rin**g** la: 'thon mi saṁ bho tra[1522] dang gnyis kyis rgya gar nas: shes pa 'phrul gyi yi ge blangs ste rgyal po la phul nas bod gyi zhang blon dang: bu tsha 'bangs rnaṁs la bslabs shing: 'dun[1523] sa che chung gi gzhi[1524] bzung nas: 'dzangs kyi bre dang:

[1509] ST2, 27.4: *bsrang*.

[1510] ST2, 27.4: *rje btsun gyis*.

[1511] ST2, 27.4: *zhus pas*.

[1512] ST2, 27.4: *bhri*.

[1513] ST2, 27.5: *sgrogs*.

[1514] ST1, 3, has only a note between lines 4 and 5 saying *rnam thar du gsal*.

[1515] ST2, 27.7: *rngog rje gtsang rje* (*zings po yang zer*).

[1516] ST2, 27.8: *g.ya' zlum po*.

[1517] ST2, 27.8: *che bas*.

[1518] This note is absent in ST2.

[1519] ST2, 27.8: *rngog tsan to ri khri 'dzaṁ*.

[1520] ST2, 27.8: *rngog rta dgu snyan gzigs*.

[1521] ST2, 28.2: *srong rtsan rgam po*.

[1522] ST2, 28.2: *mtho mi saṁ bho tra*.

[1523] ST2, 28:3: *mdun*.

[1524] ST2, 28.3: *bzhi*.

[Mar pa] gave four measures of gold as offerings. This rejoiced the master, who assented when [Mar pa] asked him to go to India. As the master knew one elder and two venerables from Vikramaśīla, he sent him [there]. At that time, there was simultaneously four great paṇḍitas: Ratnākaraśānti in the east **(he was a cittamatrin)**, Vāgīśvarakīrti in the south **(he was directly blessed by Tāra)**, Prajñākaragupta in the west **(who was said to be learned in grammar and logic)**, and the pandit Nāropa in the north **(who was said to have gained mastery in the cycles of the uncommon vehicle)**. **According to the Sa skya pa, there are six gate-scholars: on top of these four, they add the brahman Ratnavajra, and the abbot Jñanaśrimitra.** (Having gone to Pulahari), he requested Nāropa's teaching, and so on: there are many stories. **These are clarified in detail in the hagiography**. His disciple was master Chos rdor.

[II. Ancestors]

rNgog's ancestor was one called rNgog rje Zings po rje (who was contemporary with lHa to to ri snyan shal). He came from the gods (Enjoying Manifestations) from above and descended on earth by stepping on a miraculous nine-level ladder (with the intention to benefit beings) and landed (in a province of the Snowy Land called g.Ya' ltum po). From among the four original clans, he belonged to the sTong. Out of the nine clan groups which are its (subdivision), he was from the rNgog rje. (Further clan subdivisions from the rNgog are: sGro gnya', rMa, rKa ba, Gan, Lang pad, Dar, Lang 'gro, Bya rje, and sNyang rje.)

The son born from rNgog of the sTong group was rNgog Tsan rto re khris 'jam. His son was rNgog rTag snyan gzigs. He was appointed as an officer (*dpon*) at the frontier. As everyone was following him, he developed [his possessions] by touring the land of Tajikistan. He was pleased by great donations such as **a throne with an iron mechanism (*dkyil 'khor)*, a *rnge rngog* (?) with a silken back curtain, a silver bird (*dngul bya*) with sun ornaments, a silver saddle with a golden armor**, as well as gold, turquoise, brocades, pearls, precious stones and so on. He was bestowed a great insignia with golden letters.

His son rNgog dPal khrom lived at Srong btsan sgam po's time. [At that time], Thon mi sam bho ta and others brought from India the knowledge of miraculous letters. It was handed over to the king and taught to ministers, children and commoners. Having held major and minor councils, the wise

[**4.1**] phul du phyung: *srang dang zho ru phyung***:** bod rnaṁs yul dang sgo ru phye: rus dang stong lter[1525] phye: stong dpon ni ’chims[1526]: stong tshab ni rngog dpal khroṁ gyis bgyis so// de yang rgyal po srong btsan sgam po dang rngog dpal khroṁ gnyis kyi sku ring la: rngog la bor gsar[1527] ci byung yang *bor na* bor btsal drug:

[4.2] khris stod pa snang ba yin:[1528] gsad na nyi khri cig stong tsa ma nyag[1529] dang bcas pas bstod pa gnang ba[1530] yin: pho la gser gyi rta la g.yu yi rga stad:[1531] phra men la yob *chen* byas ’thing shun la ’thur srab[1532] byas pas bstod pa gnang ba[1533] yin: mo la *byung ba* dung gi mdzo mo dkar

[4.3] mo la: rnal[1534] ’ju gser la byas: rna[1535] thag dar la byas: gu zu dang dar zab khal du bskal[1536] ba cig gis bstod pa gnang ba yin: rgyal po’i sku’i sngags mkhan yin bas gser gyi phyags[1537] shing mda’ gang pa cig *kyang* gnang ba yin no// rngog khroṁ gyi sras *rngog* mdo gzigs khrom

[4.4] stan[1538]: *des* mes po’i las *ka* slangs lho bal gyi dpon bgyis ste mdzangs kyi phul **du** phyung ngo// de la sras lnga: rtsan la nag po[1539]: ring[1540] la nag po: btsan gnya’: rin ldan pa[1541] (bong ba ri bya bar chad do)[1542]: btsan sto ri gel[1543] lo (khams su chad do)// rtsan la[1544] nag pos stag gzig gi rgyal khams brtul[1545]: ring[1546] la

[4.5] nag pos hor gyi rgyal khaṁs btul: rin[1547] ldan pos glang po che khur *du khur*: rtsan sto[1548] ri gel pas rgyal po’i gung blon chen po bgyis ste: gser g.yu rtsegs ma’i yig tshang mnos so: rgyal po dpa**’** la dgyes pa’i dus su

[4.6] gru klu’i[1549] rgyal khaṁs btul: mkhar tshan chen po bzhi phab: dpa’ ba’i la dor: gung stag spel ma’i yig tshang mnos: seng ge dkar mo’i rkang[1550] lag khyad par du gnang[1551] ngo// lnga tshigs pa rngog btsan gnyas: rgyal po khri srong lde btsan mnga’[1552] phyag tu

---

[1525] ST2, 28.3: *sder*.
[1526] ST2, 28.4: *mchiṁs*.
[1527] ST2, 28.4: *bor cha*.
[1528] ST2, 28.4: *khriṁs stod pa gnang ba yin*.
[1529] ST2, 28.4: *nyag ma*.
[1530] ST2, 28.5: *snang pa*.
[1531] ST2, 28.5: *btad*.
[1532] ST2, 28.5: *bsrab*.
[1533] ST2, 28.5: *snang pa*.
[1534] ST2, 28.5: *sna*.
[1535] ST2, 28.5: *sna*.
[1536] ST2, 28.6: *skal*.
[1537] ST2, 28.6: *phyag*.
[1538] ST2, 28.6: *bstan*.
[1539] ST2, 28.7: *tsan dha nag po*. His name is the second one, but with a small *ka* indicating it should be the first.
[1540] ST2, 28.7: *ri la nag po*. His name is given as *rin la nag po* at the next occurrence.
[1541] ST2, 28.7: *ri ldan po*.
[1542] ST2, 28.7: *bong nga ri bya bar chad*.
[1543] ST2, 28.7: *tsan dho ri gel*.
[1544] ST2, 28.7: *tsan dha*.
[1545] ST2, 28.7: *btul*.
[1546] ST2, 28.7: *rin*.
[1547] ST2, 28.7: *rin chen*.
[1548] ST2, 28.8: *tsan rdo*.
[1549] ST2, 28.8: *gro gu*.
[1550] ST2, 29.1: *skang*.
[1551] ST2, 29.1: *khyad du snang*.
[1552] ST2, 29.1: *rnga*.

established measures like *bre* [4] and *phul*, *srang* and *zho*. Agricultural lands were divided into military and civilian districts, horns and thousand-districts. One chiliarque was ’Chims, and his representative was rNgog dPal khrom. Also, at the time of Emperor Srong btsan sgam po and rNgog dPal khrom, rNgog was praised for [establishing rules] in case of theft or murder: for theft, there was a rule of six [times the value] of the wanted good. For murder, there was a price of 21.000. He was praised as men had golden horses with turquoise saddles, stirrups made of gilded silver and halters made of pure lapis. He was praised as women had conch-white *dzomo*, with nose-rings made of gold and nose-ropes made of silk, carrying loads of *kesi* and brocades. As he was the *mantrin* of the Emperor’s body, he was given a golden scepter of an arrow’s length.

The son of rNgog Khrom was rNgog mDo gzigs khrom stan. He took up the work of his grandfather as an officer in the border region and became perfectly wise. He had five sons: rTsan la nag po, Ring la nag po, bTsan gnya’, Rin ldan pa (who settled [at a place] called Bong ba ri), and rTsan sto ri gel (who settled in Khams). rTsan la nag po conquered the kingdom of Tajiks, Ring la nag po conquered the kingdom of Mongols, Rin ldan po lifted the burden of an elephant. rTsan sto ri gel was a great high minister of the Emperor and was bestowed a golden insignia inlaid with turquoise. During the conquests of the emperor, the Kingdom of the Turks was tamed and the four great garrisons fell, retreating in front of the warriors. [rTsan sto ri gel?] was awarded the insignia of the mixture of leopard and tiger, and granted in particular the limbs of a snow lion.

The middle son was rNgog bTsan gnya’. When the Emperor Khri srong sde btsan came to power, he reached his thirteenth year.

[4.7] bzhes pa'i dus su: dgung lo[1553] bcu gsum lon ba cig gis: yab gyi ldang[1554] gnyer du bzhes shing: rje blon[1555] gyi spyan mngar mchis ste dang por byon: spyan thub bgyis *nas*: nang 'khor[1556] shan thogs pa bgyis **nas**: dgung lo bcu bzhi la rgya bod 'thab pa'i me la tshe naṁ phyed pa bgyis: lo

[4.8] bco lnga la: nam dral[1557] gyi mchod pa byed pa dang: gtsug lag khang gso ba la sogs pa'i dpon bgyis: dgung lo bcu drug pa la mtha'i rgya drug brtul[1558]: dmag rgya la trangs[1559] pa'i dus su bod dmag suṁ khri trangs ste: tra ma gong bu me ru'i la bsgral ste: dmag thel du spub[1560]

[**5.1**] ru rgyab du rje blon *rje* 'bangs suṁ cu rtsa drug sku mtsho zhing bzhugs pa la: rgya'i gyen pa 3: 'khor dpa' brtsan bcu rgnog 3[1561] dang bcas ste sku la brdar[1562] ba las: 'khor gang bas kyang glo ba nye ste: srog la ma 'dzeṁs pas mnga'[1563] thang che nas[1564]: rgya'i

[5.2] gyen po'i skye gcad: rgya bran chen la mnan: rgya phrug brag la bsdabs: rgya khyi stong la rgyus: rgya zho hab gyis[1565] btab: rgya mo btson du bzung: rgya las rgyal ste: dus der yang: dgu brgya'i nang nas kyang rngog btsan gnya' dpa' ba'i[1566] la dor ro// de nas gyen po'i

[5.3] mgo[1567] rta 'jug la btags[1568] te: lag mthil du spub nas: bkwa[1569] chu'i mkhar phab: buṁ gling gi lcags zam gcad do: dgu brgya phyag tu bzhes: gser g.yu khal gyis phul: dar zab tre'u dang rta khal gyis stabs[1570] te phul: dus der yang 'khor[1571] (btsan) gnya' dang

[5.4] 'khor dgu brgya **dang** suṁ cu (rtsa) drug la: 'dod dgu'i yon tan dang brtsigs rtsal[1572] ste: dgos su rngog **gtsan** gnya' la: stag gsuṁ gyi glag pa la[1573] seng ge dkar mo'i gung btang ba gnang[1574]: gser gyi yi ge rtseg mar[1575] mnos nas: yul yang gra'i yid dgur zhing dor brgya'i[1576] gling dang: bran bzi'

[5.5] dang: 'or brgyad dang: chu mi[1577] dang: kha gze[1578] la sogs ste mi khyim nyi shu 'bangs su bcad: jo mo shud bu bza' blangs: de'i sras rngog brtsan pa (rnam thang du babs[1579]) rin po che *bya ba lags*: bu mo 'phyiṁs[1580] g.yu ber la sjangs: lha sa'i grib tu zhing dor brgya bcad: bran klog kya dang: thod pa dang:

[1553] ST2, 29.1: *gung lo* (*et passim*).
[1554] ST2, 29.1: *lha.*
[1555] ST2, 29.2: *btsun.*
[1556] ST2, 29.2: *sgor.*
[1557] ST2, 29.2: *ral.*
[1558] ST2, 29.2: *btul.*
[1559] ST2, 29.3: *sprang.*
[1560] ST2, 29.3: *dpub.*
[1561] ST2, 29.4: *'khor dpa' tsan can: bcu phrag gsuṁ.*
[1562] ST2, 29.4: *gdar.*
[1563] ST2, 29.4: *par mtha'.*
[1564] ST2, 29.4: *na.*
[1565] ST2, 29.5: *kyis.*
[1566] ST2, 29.5: *bo'i.*
[1567] ST2, 29.5: *'og.*
[1568] ST2, 29.6: *rtags.*
[1569] ST2, 29.6: *kwa.*
[1570] ST2, 29.6: *gtabs.*
[1571] ST2, 29.6: *rngog.*
[1572] ST2, 29.7: *rtsis bstsal.*
[1573] ST2, 29.7: *dang.*
[1574] ST2, 29.7: *pa snang.*
[1575] ST2, 29.7: *rtser gar.*
[1576] ST2, 29.8: *rgya'i.*
[1577] ST2, 29.8: *chu ma.*
[1578] ST2, 29.8: *bze.*
[1579] The is a note at the bottom of ST1, 5, with *snang thang du babs*. The cross indicating the place of the reference is missing, but it may be a correction to *rnam thang du babs*, which indicates where rNgog brTsan pa Rin po che settled.
[1580] ST2, 29.8: *'chims.*

He became his father's temple attendant and went in the presence of the Lord. When first reaching there, he passed muster and became a guardian of the inner door. In his fourteenth year, he was made a night-watchman during the Chinese-Tibetan fights. In his fifteenth year, he made the offerings to Nam ral and was the officer taking care of the temple, and so on. In his sixteenth year, the six Chinese frontiers were tamed. When the army was led against the Chinese, 30.000 Tibetan soldiers were deployed. The army crossed the pass of Gong bu me ru. [5] The army went down to the plain and the Lord, ministers and their suite, altogether thirty-six people, remained in the back to take care of the Lord. rNgog protected the Lord and his thirty people [against] three Chinese officers and a unit of ten powerful soldiers. All the entourage was loyal as he did not care for his own life, so his power was great. He cut the throat of the Chinese officers and enslaved the Chinese. He smashed Chinese children on rocks. He moved amidst thousands of Chinese dogs. He swallowed Chinese curd. He jailed Chinese women. Thus was he victorious over the Chinese. At that time, rNgog gTsan g.nya' was the bravest among 900 [men]. After that, he hung the officers' head on horses' tails and turned [the Chinese] upside down in the palm of his hand. He took the fort of Kwa chu and cut the iron bridge of 'Bum gling, with the 900 [people] under his command. He offered [to the Emperor] gold, turquoise and silk that were loaded on mules and horses. At that time, all desirable pleasures were bestowed on rNgog bTsan gnya' and his entourage of 936 [people]. In particular, rNgog [gTsan] gnya' was given the hide of three tigers and the mane of a snow lion. Having been granted a golden inlaid insignia, he had a land with hundred plowing fields in Yid dgu in the Gra [valley]. He had twenty households as his subjects, such as the Bran bzi, 'Or brgyad, Chu mi, Kha gze and so on. He took Shud bu bza' as his wife.

His son was rNgog brTsan pa Rin po che (who settled in rNam thang). He was betrothed to the girl 'Phyims g.Yu ber. He divided the land at Grib near lHa sa into hundred plowing fields and had twenty households as his subjects, such as the Klog skya, Thod pa,

[5.6] tsi mi dang mi khyim nyi shu ’bangs su bcad: jo mo nyang zhwa rje’i sras mo blangs: de’i sras rngog btsan gzigs snang ba lags **so**: bu mo sbas che btsan[1581] la sjangs: dol phu mangs su[1582] zhing dor gsuṁ brgya bcad: bran li dang: bya dang: rang ’gro dang: rang rta dang: blo bo dang: mi khyiṁ bzhi

[5.7] bcu ’bangs su bcad[1583]: la khra la khre la *dang*: ’brog phar cham tshur cham *dang* tshun chad **’**kho ra **’**khor yug du bcad: blo bos[1584] zangs ril gyi thang du[1585] zangs ’khar byas: chu rta 2 ka[1586] la dbang mdzad: jo mo lde sman bza’ blangs: rgyal po[1587] khri srong lde btsan dad pa skyes

[5.8] pa’i dus su: ’ching bu[1588] naṁ ral gyi rin po che’i khang bur g.yu’i mchod rten shel gyi buṁ pa can cig phul: bcom ldan ’das kyi ring lugs *su* bgyis nas gser gyi yi ge chen po mnos pa lags: chos sde snod rin po che *rnaṁ* gsum la sogs ste brgyud: lung man ngag gi bdag por gyur pas

[**6.1**] rdo rje rgyal por dbang skur nas mnga’ bdag gi sku’i sngags mkhan chen por bgyis so// de’i sras rngog btsan gzigs khroṁ stan[1589] gyis la tshong gi zha[1590] che ba bgyis nas: long spyod cher byung: jo mo she bzang mo[1591] blangs: de’i sras rngog btsan gzigs sbo ga lags: de yi sras snang ba gzhung

[6.2] ba: de la sras 2: mang pa rje gzig gu[1592] dang: mang brtsan[1593] 2: spun *2* ma ’thun[1594] par: nu bo[1595] dbu ru stod lungs su chad: mang rje gzig gu la sras 2: stag gung gzigs dang: glang rgya *ra* gzig gnyis: **stag** gung gzig la[1596] sras 2: stag ra mdo mtsan[1597] dang:

[6.3] stag ra g.yu yig[1598] go: g.yu yig la sras 2[1599]: rtag tho[1600] (byang thang du chad:) dang: **stag pa dang:** (g.yu khri to): g.yu khri la sras 3: dpal le (’dam can du): rat na (g.yon du): (rat na la bu[1601] 2: skyong bu dang khri mchog: de la bu 3: mtha’ mi: ’gar tsha: ’be tsha **gsuṁ mo**: de la bu 3: sgo po: sgo chung: sher yags[1602] 3 mo: **g.yon gyi rngog rnaṁs sher legs la**) yul sbyin no (sgog du chad do:)[1603]: **de nas mi rabs gnyis na rngog lo byon:** dpal le la sras 2: gshang po dang: rog po: rog po la sras 3: dga’ po yu (sha po sgang *pa*): dga’ la ’bar (skye grong pa): yang dga’o (nad kha ba[1604])// yang dga’i

---

[1581] ST2, 30.1: *sbas lce tshan*.
[1582] ST2, 30.1: *mkhar*.
[1583] ST2, 30.2: *gcad* (*et passim*).
[1584] ST2, 30.2: *glo bas*.
[1585] ST2, 30.2: *lteṁs su*.
[1586] ST2, 30.2: *chu rta ra ga*.
[1587] ST2, 30.3: *ra tsa*.
[1588] ST2, 30.3: *phu*.
[1589] ST2, 30.4: *bstan*.
[1590] ST2, 30.4: *zhal*.
[1591] ST2, 30.5: *shel bza’ mo*.
[1592] ST2, 30.5: *mang po rje zi gu* (*et passim*).
[1593] ST2, 30.5: *mnga’ tsan*.
[1594] ST2, 30.5: *mthun*.
[1595] ST2, 30.5: *no ’o*.
[1596] ST2, 30.6: *kyi*.
[1597] ST2, 30.6: *rta ra mdo’ tsan*.
[1598] ST2, 30.6: *rta ra g.yu yig*.
[1599] ST2, 30.6: *de la sras 3*.
[1600] ST2, 30.6: *stag tho*.
[1601] ST2, 30.7: *sras* (*et passim*).
[1602] ST2, 30.7: *legs*.
[1603] This note is part of the main text in ST2
[1604] ST2, 30.8: *gad kha ba*.

and Tsi mi. He took as his wife the daughter of Nyang zhwa rje.

His son was rNgog bTsan gzigs snang ba. He was betrothed to the girl sBas che btsan. He divided the land in Lower Dol into three hundred plowing fields and had forty households as his subjects, such as the Li, Bya, Rang ’gro, Rang rta, and Blo bo. He defined the tax-paying passes, the nomadic paths and the limits of the territory. Glo bo built the Zangs Fort in the Zangs ril plain. [rNgog] had authority over both the water and horses. He took as his wife Lady lDe sman bza’. When the king Khri Srong lde btsan entered the faith, he offered to him a turquoise stūpa with a crystal dome while at the hut of the Rin po che from ’Ching bu Nam ral. He converted to Buddhism and was bestowed the great golden insignia. He became a holder of the tantras, reading transmissions and key instructions concerning the three precious Dharma Baskets. [6] He granted an empowerment to the Vajra King and became a great mantrin of the Sovereign.

His son rNgog gTsan gzigs khrom stan was a trade officer and became very rich. He took She bzang mo as his wife. His son was rNgog bTsan gzigs sbo ga. His son was sNang ba gzhung ba, who had two sons, Mang pa rje gZig gu and Mang btsan. As the two brothers did not go on well, the younger moved to sTod lung in the Central Horn (*dbu ru*). Mang rje gZig gu had two sons, sTag gung gzigs and Glang rgya ra gzigs. sTag gung gzigs had two sons: sTag ra mdo btsan and sTag ra g.yu yig. g.Yu yig had **three** sons: sTag tho (who settled in Byang thang), **sTag pa**, (and g.Yu khri). g.Yu khri had three sons: dPal le (who settled in ’Dam can), Ratna (who settled in g.Yon. He had two sons: sKyong bu and Khri mchog. They had three sons: mTha’ mi, ’Gar tsha, and ’Be tsha. They had three sons: sGo po, sGo chung, and Sher **legs. The rNgog from g.Yon go until Shes legs**), and Yul sbyin (who settled at sGog.) **Two generations after him came rNgog Lo [Legs pa’i shes rab]**. dPal le had two sons: gShang po and Rog po. Rog po had three sons: dGa’ po yu (from Sha po sgang), dGa’ la ’bar (from sKye grong), and Yang dga’ (from Nad kha). Yang dga’s

[6.4] sras: rngog pan chen kha ba (yan chad snyeng ma yin no):[1605] de'i sras *(yum 'od ldan ma)* bla ma rngog chos kyi rdo rje: de'i sras *(yum dpa' mo chos mo)* bla ma mdo sde: de la sras drug: slob dpon jo tshul (gtsang tsha **cig pu yum tshul skyid**): slob dpon jo thog (**rgyal tsha) (**yum jo skyabs **ma** *la sras 4*): jo 'od *(sras mo ha lo)*: jo bsod: ston

[6.5] chung dbang mo *(jo non gyi sras)*: jo bde 'od// jo tshul kyi sras *(brgyud pa gong ma gtsang tsha rgyud)(sras mo 'kho dge)*: bla ma kun dga' rdo rje *(yum dar mdzes)*: de la sras 3 *(yum zhig mo)*: slob dpon rin chen rgyal po *(dge slong)*: bla ma gzi brjid grags pa *(btsun pa)*: *slob dpon* rgyal po dga' *(sngags pa)*: de la sras 3 *(yum stan ba skyid)*: slob dpon seng ge sgra: bla ma rin chen

[6.6] bzang po: slob dpon chos rdor ro : *slob dpon seng ge sgra la sras 3 (yum lhas dkar): bla ma rin chen rgya mtshan: slob dpon blo gros seng ge: slob dpon bsod nams rin chen no// slob dpon chos rdor (yum sri thar brgyan)* la sras lnga: bla ma chos kyi rgyal mtshan:

[6.7] slob dpon sangs rgyas grags: slob dpon sangs rgyas seng ge: slob dpon seng ge 'bum: slob dpon khrom rgyal lo: *bla ma rin chen rgyal mtshan la sras 3: slob dpon nam mkha' rgyal mtshan: rdo rje rgyal mtshan: bsod nams bzang po'o//* slob dpon seng ge 'bum[1606] la sras **3**[1607]: **bla ma** don grub

[7.1] dpal dang: **slob dpon** don grub bzang po'o// [ST2, 31.3] **slob dpon legs pa dpal lo: bla ma don grub dpal gyi sras: bla ma byang chub dpal lo: de la sras 2: dbon po rin chen rdo rje: rin po che bkra shis dpal grub: de'i sras byang chub dpal grub:** slob dpon khroṁ rgyal la sras 2: **bla ma** sang**s rgyas** yon **tan** dang: **slob dpon** sang rin gnyis so// **de'i sras bla ma rin chen dpal bzangs: slob dpon mgon po 2 so// rgyal tsha rgyud:** slob dpon jo thog *(brgyud pa 'og ma ba rgyal tsha rgyud: yum 'phrang po lha cig 'bum rgyan:)* la sras 2:[1608] *slob dpon* rgyal tsha ra mo dang: *slob dpon* rdo rje seng ge'o[1609]// [ST2, 31.5-8] **slob dpon jo thog gi sras rgyal tsha ra mo ni/ khong rang gi khu bo ston chung dbang mo'i sku 'i skye ba yin par ye shes mkha' 'gros lung bstan/ khong rang gi khu bo dang yab la/ rje mar pa dang/ ra lo dang/ kyi bye ma lung pa/ khaṁs pa shes rab rdo rje sogs kyi sngags skor gyi chos rnaṁs la brda' bstan pa tsa gyis mkhyen pa byung/ mtshan nyi kyi chos skor rnaṁs gsang phur slob dpon cha pa'i drung du sdzogs par bsan/ khyad par du na ro pa nas rgyud pa'i dbang gdams ngag rgyud la sogs pa phyin spyi ma log par mkhyen pa byung pas sprul sku rtsod med du grags/ khong rang gi rje bstun zhe sdang rdo rje'i zhal nas/ nga bas jo thog shes rab che/ kho bas kho rang gi bu jo ra shes rab che/ khong 2 kyi shes rab de nga la yod par gyur na/ nga ra nag po la chos zhu dgos pa ma yin ste ces pa la sogs pa gsungs so/ bla ma zhe sdang rdo rjes mtshan nyid kyi rig pa mkhyen pa 'dra ste/ sngags don rnaṁ gzigs kyi 'drel pa na gsal lo/ rje mar pa nas brgyud pa'i chos so//** slob dpon ra mo la *(yum shi sha dur ma:)* sras 3: slob dpon lcam me: jo shag (*gi sras slob dpon rdor rgyal:)*: jo

[1605] ST2, 30.8: *ban chen kha ba* (*de yan chad rnying ma yin*)

[1606] ST3, 81.4 adds (*yum klu dpal*).

[1607] ST1, 6.8, has 2 instead of 3

[1608] This narrative is completely absent from ST1 and should have been added within the life story of Ra mo rather than in the genealogy.

[1609] ST2, 32.1: *rgyal tsha rdor seng 2 so.*

son is rNgog Pan chen kha ba. (Until here, they were of the old school).

[III. Genealogy after Chos rdor]

His son *(with his wife 'Od ldan ma)* is lama rNgog Chos kyi rdo rje. His son (with his wife dPa' mo chos mo) is lama mDo sde. His son is the master rNgog Chos kyi rdo rje (whose mother is 'Od ldan ma). His son is master mDo sde (whose mother is dPa' mo chos mo). He had six children: Master Jo tshul (**the only** gTsang tsha with **his partner Tshul skyid**); Master Jo thog **(rGyal tsha)**(with his wife Jo skyabs, who had four sons); Jo 'od *(his daughter is Ha lo)*; Jo bsod; sTon chung dbang mo *(the child of Jo non)*; and Jo bde 'od. Jo tshul's son *(the higher lineage, the gTsang tsha line)* is master Kun dga' rdo rje; *(his daughter is 'Kho dge)*. Jo tshul's son (the gTsang tsha line, who is the prime lineage) is master Kun dga' rdo rje; (his daughter is 'Kho dge). [Kun dga' rdo rje] (whose wife was Dar mdzes) had three sons (from this only wife): Master Rin chen rgyal po (a fully-ordained monk); master gZi brjid grags pa (a venerable one); Master rGyal po dga' (a layman). The latter had three sons (whose mother was sTan ba skyid): Master Seng ge sgra; master Rin chen bzang po; and Master Chos rdor. *Master Seng ge sgra had three sons (whose mother was lHas dkar): master Rin chen rgyal mtshan; Master Blo gros seng ge; and Master bSod nams rin chen.* Master Chos rdor had five sons *(whose mother was Sri thar rgyan):* master Chos kyi rgyal mtshan; Master Sangs rgyas grags; Master Sangs rgyas seng ge; Master Seng ge 'bum; and Master Khrom rgyal. *Master Rin chen rgyal mtshan had three sons: Master Nam mkha' rgyal mtshan; rDo rje rgyal mtshan; and bSod nams bzang po.* Master Seng ge 'bum had **three** sons: **Lama** Don grub [7] dpal; **Master** Don grub bzang po; **and Master Legs pa dpal**. [ST2, 22:31.3] **Lama Don grub dpal's son was Lama Byang chub dpal. He had two sons, dBon po Rin chen rdo rje and Rin po che bkra shos dpal grub, whose son was Byang chub dpal grub.** Master Khrom rgyal had two sons: **Lama** *Sang yon* [Sang**s rgyas** yon **tan**]; and **Master** Sang rin, **whose son were Lama Rin chen dpal bzang and Master mGon po.**

The rGyal tsha line: Master Jo thog *(he [formed] the lower [rNgog] line, the rGyal tsha line with his wife 'Phrang po lHa cig 'bum rgyan)* had two sons, *Master* rGyal tsha Ra mo and *Master* rDo rje seng ge. [ST2, 31:5-8] **The son of Master Jo thog is rGyal tsha Ra mo. A wisdom *ḍākinī* declared that he was the rebirth of his aunt sTon chung dbang mo. His grandfather and father only showed him the symbols and he knew the teachings on the tantric cycles of Lord Mar pa, Ra lo, Kyi Bye ma lung pa, Khams pa Shes rab rdo rje, and others. He learned perfectly the teaching cycles on characteristics in gSang phu with master Phya pa. As, in particular, he knew unerringly the empowerments, instructions and tantras, etc., from the lineage of Nāropa, he was famed as an indisputable body of incarnation. In the voice of the venerable Zhe sdang rdo rje: "Jo thog is wiser than me, and his son Jo ra is wiser than him. If I had a wisdom such as theirs, I would not have needed to request teachings from the Black Ra." It would seem that lama Zhe sdang rdo rje knew philosophy, as is obvious in his commentary of the *Explanation of the Meaning of the Mantras* (*sngags don rnam gzigs*). This is a teaching with a lineage from Lord Mar pa.**

Master Ra mo *(and his consort Shi sha dur ma)* had three sons: Master lCam me; Jo shag *(his son was Master rDor rgyal)*; and Jo

[7.2] bsod do *(’bum lcam)*: slob dpon lcam me’i sras *(yum dpal ’bum)*: slob dpon nam mkha’ dbang phyug *(yum ’khos mchog*[1610]*:)*: de’i sras slob dpon[1611] kun dga’ *dang*: [1612]dbang phyug ’bum 2: slob dpon[1613] kun dga’i *(yum dga’ sham mo*[1614]*)* sras: slob dpon rin chen rgyal po: de la sras 3: slob dpon[1615] rin chen dpal **ba** *(yum ’dran brgyan:)*: slob dpon grags pa rgyal mtshan: slob dpon kun dga’ blo gros: de’i sras **bla ma** kun dga’ bzang po: **de la sras lnga byon pa: bla ma ras pa: bla ma dpal ’byor ba: mkhan chen dkon mchog bkra shis: slob dpon dpal ldan bzang po: chos rje bsod nams don grub pa: de rnaṁs la sras gsuṁ: slob dpon lha dbang bzang po: slob dpon rdo rje bkra shis: slob dpon rin chen dbang phyug: de’i sras bla ma bsod rnaṁs dpal dbyangs:** de rnaṁs

[7.3] mi rgyud[1616] **kyi** *rim par byon pa’i* rim pa’o// chos kyi brgyud pa ni: rdo rje ’chang chen po: bram *ze* sa ra ha: slob dpon klu bsgrub: mkha’ ’gro ma skal ba bzang mo: slob dpon la ba pa: de bzhi’i slob ma jo bo te lo pa[1617]: des na ro pa: rje *btsun* mar pa:

[7.4] ghu ru dharma badzra **(chos kyi rdo rje)**: ghu ru su tra nāee **(mdo sde)**: ghu ru a nanta badzra **(kun dga’ rdo rje)**: ghu ru te dzo kirti **(gzi brjid grags pa)**: ghu ru rad na bha tra **(rin chen bzang po)**: ghu ru dharma ke du[1618] **(chos rgyal ba)**: *ghu ru radna dho dza’o* [= rin chen rgyal mtshan]: **ghu ru ka dza sa dhi shri rnaṁs so (don grub dpal rnams so)**// *dgyes pa rdo rje dang: gur gyi brgyud pa ni (rdo rje ’chang gis: phyag rdor: skal ba bzang mo: te lo: na ro: mar pa’o: yang ḍom bhi he ru kas: thar pa lam ston: mar pa’o// yang la ba’i nam zas: me tri ba: des mar pa la’o//) slob dpon klu sgrub kyis spyan drangs nas: des te lo pa la gnang: de bzhin du na ro pa*

[7.5] *la: mar pa: su tra nāee: a nanta: te dzo kirti: sing ha na da: rad na bha tra 2 (lhan du): de 2 la dharma ke tu: rad na dho dza 2 la’o (tha dad du’o:)//*[1619]

[7.6] *gdan bzhi’i brgyud pa ni: klu sgrub: arya dhe ba: te lo pa: na ro pa: mar pa: yang dge ba’i go cha: sde’i go cha rnam rgyal dbang po: thang chung pa: mar pa: chos kyi rdo rje: yang: ḍa ki skal ba bzang mo: te lo: na ro: mar pa: mdo sde: a nanta:*

[7.7] *te dzo kirti: sing ha na da: rad na bha dra (2 po lhan du): de 2 kyis rad na dho dza la’o// nyer rgyud ni: rdo rje ’chang: mkha’ ’gro ma chu shing gi rnye ma can: mar pa la rgyud de gong ltar ro//*[1620] *ma hā ma ya’i brgyud pa ni: na ro pa dang: ku ku ri pa 2 la mar pas gsan no: sgrub thabs gzhan*

[1610] ST3, 81.15 adds *ya kha ba.*

[1611] ST2, 32.1: *bla ma.*

[1612] ST2, 31.1: *slob dpon.*

[1613] ST2, 32.2: *bla ma.*

[1614] ST3, 81.16 adds *yar lungs pa.*

[1615] ST2, 32.2: *bla ma.*

[1616] ST2, 32.3: *gdung rgyud.*

[1617] ST2, 32.4: *ti lo pa.*

[1618] ST2, 32.5: *ghu ru dharma rdwa tsha:*

[1619] For the religious lineages, ST1 and ST2 differ significantly, hence ST1 is kept in the main text while ST2 is transcribed in the notes. ST2, 32.5: *dgyes pa rdo rje rtsa rgyud bshad pa’i rgyud pa ni: slob dpon klu sgrub gyis spyan drangs nas: ti lo pa la gnang: na ro pa: mar pha: mdo sde: kun dga’: gzi brjid grags pa: rin chen bzang po: chos kyi rgyal mtshan: don grub dpal ba’o//*

[1620] ST2, 32.6: *gdan 4’i rgyud pa ni: slob dpon chen po na ka dzu: arya de ba: shes rab bzang po: pu la ha ri pa: dharma ma ti la sogs pa bdag byin gyi rlob// nye rgyud ni: rdo rje ’chang: mkha’ ’gro ma chu shing gi snye ma can: mar pha: mdo sde nas rims gyis so//*

bsod *([his son] was 'Bum lcam)*. Master lCam me *(and his consort dPal 'bum)* had one son, Master Nam mkha' dbang phyug. He *(and his consort 'Khos mchog from Ya kha)* had two sons, Master Kun dga' and dBang phyug 'bum. Master Kun dga' *(and his consort dGa' sham mo from Yar lungs)* had one son, Master Rin chen rgyal po. He had three sons, Master Rin chen dpal; Master Grags pa rgyal mtshan; and Master Kun dga' blo gros. [Rin chen dpal] *(and his consort 'Dran brgyan)* had one son, **Lama** Kun dga' bzang po. [ST2, 32.2] **He had five sons: Lama Ras pa, Lama dPal 'byor ba, mKhan chen dKon mchog bkra shis, Master dPal ldan bzang po, and the Dharma Lord bSod nams don grub pa. Altogether, they had three sons: Master lHa dbang bzang po, Master rDo rje bkra shis and Master Rin chen dbang phyug. The latter's son was bSod nams dpal dbyangs.** They are the successive members of the human line.

[IV. Religious lineages]

The religious succession: The great Vajradhāra; the brahman Saraha; the master Nāgārjuna; the *ḍākinī* Kalpabhadrī; the master Lavapa; these four to master Tilopa; Nāropa; the venerable Mar pa; guru Dharmavajra **(Chos kyi rdo rje)**; guru Sūtrantā **(mDo sde)**; guru Ānandavajra **(Kun dga' rdo rje)**; guru Tejaḥkīrti **(gZi brjid grags pa)**; guru Ratnabhadra **(Rin chen bzang po)**; guru Dharmaketu **(Chos rgyal ba)**;[1621] guru Ratnadvaja [= Rin chen rgyal mtshan]; **guru Kajasiddhiśri (?) (Don grub dpal)**.

The lineage of *Hevajra* and *Pañjara*: (Vajradhāra; Vajrapāni, Kalpabhadrī, Tilo, Nāro, Mar pa. Also: Ḍombi Heruka, Thar pa lam ston, Mar pa. Also: Lava'i nam zas, Maitripa, Mar pa.) These lineages having been received by Nāgārjuna, he gave them to Tilo, and likewise to Nāropa, Mar pa, Sūtrantā [mDo sde]; Ānanda[vajra] [Kun dga' rdo rje]; Tejaḥkīrti [gZi brjig grags pa]; Siṃhanāda and Ratnabhadra (simultaneously); they both gave it (separately) to Dharmaketu [= Chos kyi rgyal mtshan] and Ratnadvaja [Rin chen rgyal mtshan].

Lineage of *Catuṣpīṭha*: Nāgārjuna; Āryadeva; Tilopa; Nāropa; Mar pa. Also: Kalyāṇavarman (*dGe ba'i go cha*); Senavarman (*sDe'i go cha*); Vijayendra[sena] (*rNam rgyal dbang po*); Thang chung pa; Mar pa; Chos kyi rdo rje. Also: *ḍāki*[*nī*] Kalpabhadrī; Telo; Nāro; Mar pa; mDo sde; Ānanda; Tejaḥkīrti; Siṃhanāda and Ratnabhadra (simultaneously); the two to Ratnadvaja. Short lineage: *ḍākinī* Cluster of Banana Tree; and Mar pa; then it is as before.

Lineage of *Mahāmāyā*: Mar pa received it from both Nāropa and Kukuripa. As for the other *sadhana*s:

[1621] Chos kyi rgyal mtshan is also called Chos rgyal ba. His Sanskrit name should actually be Dharmadvaja, which is the name given to him when describing his life on p. 18.

[7.8] *dag ni: ku ku ri pa: bhudha pa: chos kyi bzang po: zhi ba bzang po: mar pa: su tra nāee?: a nanta: te dzo kirti: rad na bha tra: sing ha na da: dharma ke du: rad na dhva dzarnaṁs la'o//*[1622] *sam bhu tri'i brgyud pa ni: rdo rje 'chang: mkha' 'gro ma ka ma la am ghi la:*

[**8.1**] *nag po pa: te lo pa: na ro pa: pradznyā rakri ta: bal po spyi ther ba: ra rdo rje grags: dharma bazra: su tra nāee ?: a nanta: te dzo ghirti: rad na bha tra: sing ha na da: dharma ke du: rad na dho dza'o//*[1623] *rtsa ltung rgya che 'grel gyi brgyud pa ni: 'jam dpal grags pa: birya pa: padma'i*

[8.2] *zhabs: gso ma kri: badzra ha sa: badzra yan ta: arya dhe ba: rtsan tra pa: bla ma can dhe ba: bal po 'phan stengs pa: dpe mtha' bzhi'i lo tstshha ba: sku ston chos rgyal: spug rgya ga ra dza: a sang kirti: lho nag smon lam khri: ghu ru a nanta: te dzo kirti: sing*

[8.3] *ha na da: rad na bha tra la'o//*[1624] *'jam dpal gyi brgyud pa ni: 'jam dpal: sgeg pa rdo rje: surya sing ha: dharma badzra: mu tra si ti: dhe ba shwa ra: dhe shanti garba: rmi ti 2 la bshad: des tshong sde ngag gi dbang phyug: khams pa shes rab rdo rje: dharma badzra: su tra nāee?: a nanta badzra: te dzo kirti:*

[8.4] *rad na bha tra: sing ha na da: yab sras 2 dang: dharma ke du rnaṁs la'o// yang shanti garba'i slob ma: surya sidhi la: des kyi bye ma lung pa: des dharma badzra la'o//*[1625] *yang rigs sdus kyi brgyud pa ni: su tra ne: ram rdo rje grags: bka' lung snyan sgoṁ: mnga' ris pa byang tshul:*

[8.5] *rgya pho ba lung ba: des ra tsa a nanta dang: sing ha na da 2: des dharma ke tu: rad na dho dza'o// yang slob dpon ra tsa a nantas: rad na bha tra: des rad na dho dza la'o//*[1626] *gsang ldan gyi brgyud pa ni: su tra nai: tsags dar ma rgyal po: mtshur dung bu kha pa: dge shes bzang*

[1622] ST2, 32.7: *ma ya'i rgyud pa ni: na ro pa: mi tri pa: zhi ba bzang po 3 la rje mar pas zhus pa'i bla ma rgyud riṁs << >> tsun sngar dang 'dra//*

[1623] ST2, 32.8: *saṁ bhu tri'i rgyud pa ni: rdo rje 'chang: mkha' 'gro ma ka ma la: aṁ ki la: nag po spyod pa: ti lo pa: na ro pa: pradznya rakshi ta: bal po spyi ther ba: ra rdo rje grags: bla ma mdo sde nas don grub dpal gyi bar du'o//*

[1624] ST2, 33.4: *rtsa ltung rgya cher gyi 'grel rgyud ni: 'jaṁ dpal grags pa: bir ba pa: pad ma'i zhabs: so ma tri: badzra ha sa: badzra yan ta: a rya de wa: tsantra pa: bla ma dpen ta ba: bal po 'phan stings pa: dpe mtha' 4'i lo tstsha ba: sku ston chos rgyal: dpug rgya ga ra dza: a sang kirti: lho nag smon lam khri: bla ma kun dga' nas riṁs gyi'o//*

[1625] ST2, 33.1: *mtshan brjod gyi rgyud pa ni: 'phags pa 'jaṁ dpal: slob dpon sgeg pa rdo rje: surya sing ha: dharma badzra: mu tra si dhi: de bā shwa ra: des shanti garba dang smri ti la bshad do: des tshong sde ngag gi dbang phyug: khaṃs pa shes rab rdo rje: bla ma chos rdor nas don grub dpal gyi bar du'o: yang shan ti garbas: surya sidhi: des kyi bye ma lung pa chos kyi sengge: de nas bla ma chos rdor nas riṁs kyis so:*

[1626] ST2, 33.3: *rigs bsdus kyi rgyud pa ni: bla ma mdo sde yan dgyes rdor dang mtshungs: de nas raṁ rdo rje grags: bka' lung pa snyan bsgoṁ: snga rigs pa byang chub tshul khrims: rgya pho ba lung pa: des slob dpon ra dza a nan ta dang: gu ru sing ha na da 2: des bla ma chos kyi rgyal mtshan: des don grub dpal la'o//*

Kukuripa, Buddhapa, Dharmabhadra, Śantibhadra, Mar pa, Sūtrantā, Ānanda, Tejaḥkīrti, Ratnabhadra, Siṃhanāda, Dharmaketu, Ratnadvaja.

Lineage of *Saṃpuṭa*: Vajradhāra, *ḍākinī* Kamala Amghila, [8] Krisnācārya, Tilopa, Nāropa, Prajñarakśita, the Newar sPyi-ther pa, R[w]a rDo rje grags, Dharmavajra, Sūtrantā, Ānanda, Tejaḥkīrti, Ratnabhadra, Siṃhanāda, Dharmaketu and Ratnadvaja.

Lineage of the *Large Commentary on the Root Downfalls*: Mañjukīrti; Vīryapā, Padmapāda; Somakri (?); Vajrahasa; Vajrayanta; Āryadeva; Candrapā; master Can lhe ba (?); the Newar ’Phan stengs pa (Phamthingpa); he to mTha’ bzhi’i lo tsā ba; sKu ston Chos rgyal; sPug rgya ga ra ja; Asaṅgakīrti; lHo nag sMon lam khri; guru Ānanda; Tejaḥkīrti; Siṃhanāda; Ratnabhadra.

Lineage of *Mañjuśrī*: Mañjuśrī, Vilāsavajra, Sūryasiṃha (*Nyi ma sengge*), Dharmavajra (*Chos kyi rdo rje*), Mudrāsiddhi (*Phyag rgya’i dngos grub*), Deveśvara (*lHa’i dbang phyug*), to both Śāntigarbha and Smṛtijñāna, him to Tshong sde Ngag gi dbang phyug, [then] Khams pa Shes rab rdo rje, Dharmavajra ([rNgog] Chos rdor), mDo sde, Kun dga’ rdo rje, gZi brjid grags pa, Rin chen bzang po, him to both Seng ge sgra and his son [Rin chen rgyal mtshan] & to Chos kyi rgyal mtshan. Also, it was [received] from the disciple of Śāntigarbha, Sūryasiddhi, by Bye ma lung pa, and from him by Chos rdor.

Lineage of the the Combined Families (*Pañjara*): mDo sde, Ram rdo rje grags, bKa’ lung Snyan sgom, mNga’ ris pa Byang tshul, rGya pho ba lung pa, to both rGyal po dga’ (Rājānanda) and Seng ge sgra, him to Chos kyi rgyal mtshan and Rin chen rgyal mtshan. Also, master rGyal po dga’ gave it to Rin chen bzang po, who gave it to Rin chen rgyal mtshan.

Lineage of *gSang ldan*: mDo sde, rTsags Dar ma rgyal po, mTshur Dum bu kha pa, dGe bshes

[8.6] *mo ba: radna bha tra: des sing ha na da yab sras 2 la'o//*[1627] *'dzam nag gi brgyud pa ni: chag lo tstsha: su tra nāai?: rgyal tsha ra mo: a nan ta: te dzo kirti: sing ha na da dang: rad na bha tra'o// de rnaṁs chos rgyud kyi rim pa'o//*[1628] bla ma chos rdor gyis dang po**r**

[8.7] s**e** lung[1629] du: dge shes dgyer pa la rnying ma gsan pas: dgongs chos cig la sgyer pa'i gsung nas: da lta lho brag na rje btsun mar pa zhes bya ba rgya gar du dka' ba dpag du[1630] med pa spyad nas[1631] dam pa'i chos gsang sngags gsar ma zhes bya ba'i gdams pa khyad par can bsnaṁs[1632]

[8.8] pa cig yod par 'dug: der rang rngog ston 2 kyang der 'deng ngam gsung: der las 'phros sad nas mos gus thun mong ma yin pa dungs pa *cig* skyes te: (dge bshes dgyer la'ang gshegs par zhus pas: nga na so rgas pas mi rtol[1633] rngog ston rang bzhud[1634] gsung:) de**'i** nub rang chos thon bar zhus: de nas tshur *gzhung* re bor byon: rgyags phye[1635] la sogs pa'i grabs byas nas nang bar *rang*

[**9.1**] dpon g.yog 3 rta cig dang bzhi byas lho brag tu byon: rta de rje btsun la phul nas (bas 'di[1636] 'bul ba yin na chung yang chung: zhu rten yin na che yang che gsung ngo[1637]:) gsang sngags gsar ma gsan no: de nas rje btsun gzhung re[1638] bor spyan drangs te[1639]: (spong thag dang po la *sbra 'bri* snag[1640] brgya dum cig *nang spyad dang bcas pa phul*[1641]:) rtsa ba'i rgyud stag pa 2 pa bshad rgyud gur: sgrub thabs mtsho skyes rdo rje:

[9.2] yan lag drug pa: mkha' 'gro **lnga**[1642]: bdud rtsi 'od: bdag med ma dang lnga: dbang lha dgu lha mo bcwo lnga: gur rigs bsdus: gdams ngag na ro'i chos

[9.3] drug dang bcas pa'i skor 'di dang cig: (spong thag bar pa la dkon rtsegs *cig gis sna drangs pa'i* po ti bcu dang: gang yod **lhor** khyer nas *lho brag du* phul:) dpal gdan bzhi**'i** rtsa rgyud: bshad rgyud chen mo: mantra ang[1643] sa: dkyil 'khor *gyi* cho ga: rnal 'byor nam mkha': ye shes dbang phyug ma: shing cig dka' 'grel: mchan khung sbyor ba: de nyid bzhi pa: yang dag *pa'i* ye shes snang ba:

[1627] ST2, 33.2: *gsang ldan gyi rgyud pa ni: mdo sde yan mtshan brjod dang 'dra la: des rtsags dar ma rgyal po: 'tshur duṁ bu kha pa: dge bshes bzang mo ba: bla ma rin chen bzang po: bla ma chos kyi rgyal mtshan: bla ma don grub yan du'o//*

[1628] ST2, 33.5: *'dzaṁ nag gi rgyud pa ni: phyag lo tstsha ba: bla ma mdo sde: rgyal tsha ra mo: bla ma kun dga' nas don grub dpal gyi bar du 'o: de naṁs ni chos rgyud kyi rim pa'o//*

[1629] ST1, 8.7 has *si lung*.

[1630] ST2, 33.7: *tu.*

[1631] ST2, 33.7: *gcad pa'i:*.

[1632] ST2, 33.7: *rnaṁs.*

[1633] ST2, 33.9: *thon.*

[1634] ST2, 33.9: *yang bzhugs.*

[1635] ST2, 33.8: *che*

[1636] ST2, 34.01: *khyed kyi ni.*

[1637] ST2, 34.01: *sku ri gnang.*

[1638] ST2, 34.1: *ri.*

[1639] ST2, 34.1: *ste.*

[1640] ST2, 34.01: *gnag.*

[1641] Instead of the words in italics, ST2, 34.01 has *dang: gzhan dngos su buṁ cha cig phul nas.*

[1642] ST1, 6.2 has *la* instead of *lnga.*

[1643] ST2, 34.2: *aṁ.*

bZang mo ba, Rin chen bzang po, and him to both Seng ge sgra and his son [Rin chen rgyal mtshan].

Lineage of *Black Jambhala*: Chag Lo tsā; Sūtrantā; rGyal tsha Ra mo; Ānanda; Tejaḥkīrti; Siṃhanāda and Ratnabhadra.

These are the successive spiritual lineages.

[V. rNgog Chos rdor]

First, Master Chos rdor learned the old tantras (*rnying ma*) with dGe bshes dGyer pa at Se lung.

During a teaching, dGyer pa said: "Nowadays, there is in lHo brag one called the Venerable Mar pa, who underwent innumerable hardships in India, and brought special instructions which are said to be the new (*gsar ma*) holy doctrine. Should I and rNgog ston go there?" [rNgog's] karmic connection having been awakened, extraordinary devotion and love rose in him. (He requested dGe bshes dGyer to go, but the latter said: "I am sick and old, and will not depart; but rNgog ston himself shall go.") That very evening, [rNgog] asked to leave the teaching, and went back to gZhung ri bo. He prepared some flour for the journey and so on, and the next day, [9] the lord, two servants, and a horse left for lHo brag. He offered that horse to the Venerable (who said: "if that is an offering, it is small indeed. If that is a support for a request, that is big indeed!"), and [rNgog] listened to the new secret mantras from him. Then, he invited the Venerable to gZhung ri bo.
(He made a first great donation and gave [Mar pa] a tent with a herd of hundred black female yaks). It is said that he received a first cycle containing:

- the root tantra [of *Hevajra*] – the *Two Segments* –;
- the explanatory tantra – the *Pañjara* –;
- five *sādhana*s: the *Saroruhavajra-sādhana*; the *Six Branches*; the ***Five*** *Ḍākinī*s; the *Amṛtaprabha*, and *Nairātmya*;
- the empowerment in the 9 male deities, the 15 female deities and the combined families of *Pañjara*;
- instructions on the six doctrines of Nāropa.

(For the middling great donation, he offered ten volumes, foremost among which the *Ratnakūṭa*, as well as everything he could bring to lHo brag). He received a second cycle containing:

- the *Śrīcatuṣpīṭhatantra*;
- the *Great Explanatory Tantra* and the **Mantrāṃśa*;
- the *Maṇḍalopāyikā*;
- Yogāmbara and Jñāneśvarī;
- the commentary on the [mantra beginning with] **ekavṛkṣa*;
- the *Kakṣapuṭa*; the *Catuṣpīṭhacatustattva*; the *Appearance of Perfect Knowledge*;

[9.4] ’chi bslu[1644] dang bcas pa’i skor ’di dang gnyis// (spong thag spyi ma la lug tsher mo[1645] brgya dum cig gis sna drangs *pa’i dngos po* gang yod *rnams* **lhor** lho brag tu khyer nas phul **bas**:) dpal ma h**ā** ma ya rgyud le’u 3: skyed rims rgyas bsdus 3: **rdzogs riṁs** *de kho na nyid man ngag* rtsa ’grel 2: *dkyil ’khor gyi*[1646] cho ga: gtor chog dang

[9.5] bcas pa’i skor ’di *3* gnang[1647] gsung: spong thag lan 3 byas pas chos skor 3 las ma gnang[1648]: bla ma la chos **yod pa la yin te: nga rang**[1649] nor gyis **de las** ma ’dang**s** gsung: bla ma la chos skyong

[9.6] ka[1650] ka rtsal: thod ’phreng can[1651]: dud sol **lha mo** dang 3 ’dug pa la: 3 ka zhu byas pas: 3 car[1652] mi **g**ter: gcig ’doms gsung ba *la*: thugs gyis dgongs pas[1653] bla ma gar bzhud kyang: de nub lta bu dud sol gyi gtor ma cig mdzad nas sang bzhud[1654] pa’i

[9.7] **phy**ogs der gtong par ’dug pa dang: jo bo na ro pa’i chos skyong du ’dug pas: dud sol ma[1655] *la* ’daṁs *nas*[1656] zhus pas: bla ma’i zhal nas **bu** ’dam kha[1657] ma log rten ’brel legs gsung *(nga’i bla ma na ro pa’i gsung nas kyang: khyod la slob ma bu chen bzhi yod pa’i khyad par bshad rgyud ’dzin pa cig gi phyir ’gro bar ’dug gsung pas:)* **nas rgyud lung gdams ngag rjes gnang dang bcas pa gnang ngo// kyi** bye ma lung pa (chos kyi seng ge) la ’jam dpal mtshan brjod **gsan**: sngags don rnaṁ gzigs: gsang ldan

[9.8] **gyi** sbyin bsreg rim 2: glag **b**sgrub: snyan grags dge ma: grags sbyin ma: a sho ka ri: sngags ’grelrnaṁs zhus: *phyis ’khams pa* shes rab rdo rje la (nyi khri cig phul nas) zhus pas jo bo snga spyi gnyis zer *ro*:

[**10.1**] (nye gnaṁ pa) ra lo tsha ba rdo rje grags la (mdo mangs **1** *de khong la* phul) saṁ bhu[1658] ṭi zhus: klog kya shes rab brtsegs la stobs po che zhus: ma h**ā** ma ya’i rgyud kyi ’gyur yang bcos so// shangs su suṁ ba ye shes ’bar la rnal ’byor gyi rgyud[1659] nyan *du byon pas: khong* lha khang la sogs pa byed pas[1660] brel nas: ’o yug du raṁ glu[1661] gong ba’i

[10.2] a khu cig la rnal ’byor *gyi* rgyud gsan[1662] gsung ngo// de nas lan cig tsam[1663] na bla mas phu*g* ron gyi ro cig la grong ’jug byas nas e yong lta yis: phug ron ’phur song na[1664] *khang* pa’i ’thongs dang: dkar khung khog cig gsung *nas*: bla mas rnaṁ shes phug ron

---

[1644] ST2, 34.3: *mchi blu.*
[1645] ST2, 34.5: *lug ma mo dang thong ’tsher.*
[1646] ST2, 34.3: *dal.*
[1647] ST2, 34.4: g*san.*
[1648] ST2, 34.4: *snang.*
[1649] Instead of the part in bold, ST1, 9.5 has *yod pas nga ra’i.*
[1650] ST2, 34.4: *kaṁ.*
[1651] ST2, 34.4: *rtsal.*
[1652] ST2, 34.5: *ka.*
[1653] ST2, 34.5: *nas*
[1654] ST2, 34.6: *’byon.*
[1655] ST2, 34.6: *lha mo.*
[1656] ST2, 34.6: *lugs.*
[1657] ST2, 34.6: *’deṁs kha.*
[1658] ST2, 34.8: *bho*
[1659] ST2, 34.8: *rgyun.*
[1660] ST2, 35.1: *pa dang.*
[1661] ST2, 35.1: *klu.*
[1662] ST2, 35.1: *nyan.*
[1663] ST2, 35.1: *rtsa.*
[1664] ST2, 35.2: *’gro bas.*

- and the *Death Cheating*.

(For the last great donation, he offered everything he could bring to lHo brag, most notably a herd of hundred sheep and young goats). He received a third cycle containing:

- the three-chapter Glorious *Mahāmāyātantra*;
- the three extensive and condensed [*sādhana*s] on the creation stage;
- both the root-text and commentary of the *Key-Instructions on Suchness* **on the perfection phase**;
- the *maṇḍala* ritual; and the *gtor ma* ritual.

[rNgog Chos rdor] said: "I did three great donations, but did not receive more than three cycles of teachings – not because the master did not have teachings but because my wealth was not enough.

The master had three protectors – Ka ka rtsal, Thod 'phreng can and Dud sol ma. [rNgog] requested all three, but [Mar pa] replied: 'I will not give all three: choose one!' [rNgog] thought: "Wherever the master goes, on the evening he makes a *gtor ma* of Dud sol ma, and throws it towards the next day's destination; also, she is Nāropa's protector." So, having chosen Dud sol ma, this is what he requested. The master told him: "Don't change your mind, this is a perfect interdependent connection; *(my master Nāropa indeed said: "You will have four great disciples, and this goes in particular for the one who will uphold the explanation lineage.)* **Then he gave him the tantra, the reading transmission, instructions and the authorization.**

From Bye ma lung pa (Chos kyi seng ge), he received the *Mañjuśrīnāmasaṃgīti*, the *Explanation of the Meaning of the [Name-]mantras*, the *gSang ldan* fire oblation in two phases, the reading practice, [the *Mañjuśrīsādhana* composed by] Yaśokalyāṇī; [the *Mañjuśrīratnavidhi* composed by] Yaśodā, the *A sho ka ri* as well as commentaries on the mantras. Later, he requested [this transmission] from Khams pa Shes rab rdo rje (after having offered to him a 20.000-stanza *Prajñāpāramitā*). The two are thus called the earlier and later lords. [10]

He received the *Saṃputa* from Ra Lo tsā ba rDo rje grags (from Nye gnam)(after offering him a mDo mang). From Klog skya Shes rab brtsegs, he received *Mahābala*, and also prepared a translation of the *Mahāmāyātantra*. [rNgog Chos rdor] travelled to Shangs to listen to the yoga tantras from Sum pa Ye shes 'bar, but as he was busy building a temple and other things, [rNgog] went to 'O yug to listen to the yoga tantras from an uncle of Ram klu gong pa.

Then, once, when the master [Mar pa] entered the corpse of a sparrow, [Chos rdor] watched what was going on: [Mar pa] said "if the sparrow takes off, close the openings and windows of the house!" The master transferred his consciousness in the sparrow's corpse,

[10.3] gyi ro la bcug pas: phug ron langs byung nas ’phur ste: gshog pa btab btab[1665] byas kyang phyir ’gro sa ma rnyed par: slar bla ma nyid kyi sku lus la rnaṁ shes btsud nas dbugs nar gyi*s* byung bas: ngas ’grong ’jug byas na yong[1666] par ’dug gsung ngo// **yang** skabs

[10.4] cig **dol gyi** yal pho mo dang rts*w*a *kha* la ma ’cham pa**r**: kho**ng** tshos *(phu’i phyugs lugrnaṁs sangs gyis phyags pas:)* bla ma la bsdos[1667] nas: gnod[1668] pa mang po skyal bas[1669]: rje *btsun* mi la **ras pa**s: phug par ser ba bsgrubs pas: thun dong du ’brug ldir ba la sogs pa’i ltas *mang* po byung nas: ston ser kha yal **pho** mor ser

[10.5] ba chen po phab pas: lung pa ’od pas khengs shing **grong khyiṁ mi** *dang* phyugs *lug* thams cad khyer: *mar ma yar chad du*[1670] grog**s** rings dang sh*w*o kha chen po khengs[1671]: rje btsun gyis tshur res laṁ kha’i bye’u *mang po* shi ba’i ro rnaṁs thu bar *tha*

[10.6] stums[1672] nas byon ste: **dal gyi stengs bu** bla ma’i spyan sngar spungs nas[1673]: ngas bla ma la chos zhur ’ongs pas *da* ’di tsam pa’i[1674] sdig pa cig bsags: gzhan ci tsam shi**’i** tshad ci yod gsung nas bshums pas: *bla ma’i zhal nas* ras pa khyed: de la zhed mi dgos: nga la

[10.7] phyag rgya chen po’i gdams ngag rol rgya shal thabs[1675] cig gis ’ded pa: bya brgya ’ur brdo[1676] cig gi*s* ’ded pa’*i* sdig can skad cig la sangs rgya ba’i *thabs zab mo*[1677] ’di ’dra ba cig yod **pas** khyod la sbyin gyi gsung nas gnang **ste**: se gol stog pa cig mdzad pas: byi ro thams cad **langs nas 1 zer** naṁ

[10.8] mkha’ la sib gyis ’phur *nas* song bar gda’: *gzhan yang sku’i yon tan mang du gda’o*// bla ma mdo sde ni sku tshe snga[1678] ma *la* gtsang[1679] na[1680] mkhan po spug ye shes rgyal[1681] bya ba cig bzhugs pa la: khong ’das nas *spur la me btang bas*[1682] spur khang *nang* nas ’od sbyang[1683]

[**11.1**] ba tsam cig don[1684] nas shar phyogs ngos nas mar song ba de mi thams cad kyis ’thong bas: btsun ma mo jo mo sgre[1685] mo bya ba lo *nyis brgya tsam lon ba* ye shes kyi mkha’ ’gro ma *yin pa* cig na re: nga’i mkhan po ngam shod bye ma’i sbubs[1686] na: bla ma mar

---

[1665] ST2, 35.2: *theb theb.*
[1666] ST2, 35.3: *’ong*.
[1667] ST2, 35.3: *gdos.*
[1668] ST2, 35.3: *snod.*
[1669] ST2, 35.3: *ba la.*
[1670] ST2, 35.4: *ma ma gser steng yan.*
[1671] ST2, 35.5: *byas so.*
[1672] ST2, 35.5: *ltuṁs.*
[1673] ST2, 35.5: *ste.*
[1674] ST2, 35.5: *gyi.*
[1675] ST2, 35.6: *’debs.*
[1676] ST2, 35.5: *thog.*
[1677] ST2, 35.5: *gdams ngag.*
[1678] ST2, 35.7: *sngon.*
[1679] ST2, 35.7: *rtsang (et passim).*
[1680] ST2, 35.7: *du.*
[1681] ST2, 35.7: *rgyen*, which may be a condensed form of *rgyal mtshen*? The *breng bu* is not sharp.
[1682] ST2, 35.8: *spur gzhu bas.*
[1683] ST2, 35.8: *ljang pa*.
[1684] ST2, 35.8: *thon.*
[1685] ST2, 35.8: *sgren mo (et passim).*
[1686] ST2, 36.1: *dbus.*

and the sparrow rose and started to fly; even though he flapped his wings, he could not find a way out, and so the consciousness re-entered the body of the master himself, who took a deep breath and said: “I’m back from having entered another’s body!”

Once, [rNgog] had a disagreement about pasture with the [people from] Yal pho mo **in Dol**. They had encroached on the lama’s [territory] (by letting the cows and sheep of the upper [valley] graze freely) and caused him much harm. The Venerable Mi la **ras pa** conjured hail from a cave: in the magic pit, many omens appeared, like thunder-rolls and so on, and a great hail fell on the rift of Yal **pho** mo. The valley was flooded, and everything–fields, **villages, houses, men** and cattle–was carried away. Everywhere was filled by quick ravines and great floods. When the Venerable came back, there were corpses of *many* dead birds all along the road. He covered them in his *chuba*, heaped them in front of the Master, and said, weeping: “I came to receive the dharma from the Master, but now I have accumulated such an evil deed! How much more should there be that I die?”

The master replied: “Oh you, Ras pa, you do not need to be afraid. I have the instructions of mahāmudrā which are like a hundred dances led with one pair of reins, or one hundred birds driven with a single slingshot: these are *profound methods* that enlighten the sinner in an instant. I will give them to you with a speech of generosity.” He snapped his fingers once, and instantaneously all the small birds’ corpses took off and left.

There are many other qualities of [rNgog Chos rdor’s] body.

[VI. rNgog mDo sde]

In his past life, Lama mDo sde was in gTsang a mKhan po named sPug Ye shes rgyal. After his death, *when fire was set to the corpse*, a green light [11] appeared from *within* the pyre and went down towards the East. Everyone witnessed that, and a nun called Jo mo sgre mo, *a two-hundred-year-old* wisdom-*ḍākinī*, said: “Our mKhan po will be born in the middle of Bye ma in Ngam shod, as the son of either lama Mar pa

[11.2] pa'aṁ: bla ma rngog gzhung ba gang rung cig gi sras su sku 'khrungs pa yin gsung: de'i phyi de lo la: yab bla ma chos rdor: yum dpa' mo chos mo 2 kyi sras su (zho lung tshes par)[1687] sku 'khrungs pa yin gsung: yab kyis gdan bzhi'i rtsis mdzad pas: *(dbus gtsang khams 3 du grags pa'i*)[1688] bsod nams can cig **'di la** yong

[11.3] bar 'dug gsung **ngo**: dgung lo bzhi *lnga* lon tsam na: spong thag bar pa la: mi*d* la ras pas g.yog byas nas yab sras kun: bla ma mar pa'i spyan mngar **lho brag du** byon nas: khong la lha dgu dang: lha mo bcwo lnga 2[1689] kyi dbang *bka*'

[11.4] zhus: rgyud rnaṁs tshar cig zhus[1690] pa'i chos grags: bu tshas[1691] res yab kyi gnya' gong du zhons dbu skra dang zhal tshoms la gnod pa byas: res bla ma'i dbu skra dang zhal tshoms la gnod pa byas pas[1692]: yab gyi[1693] zhal nas **byis pa** 'di so ma[1694] bsod par 'dug: sang nas khrid

[11.5] mi 'ong dgos par 'dug gsung: rje btsun gyi zhal nas byis pa 'di ma bzhag par khrid la shog: 'di la rngog gzhung pa **mdo sde** bya ba[1695] *bsod nams can cig 'ong*: **bsgoṁ chen** rje btsun mar pa dang 'byal[1696] ba yin zer nas nga la *b*rgyud pa snyag pa *cig* 'ong gsung nas lung stan *yang*

[11.6] mdzad do// *d*gung lo brgyad lon tsam na: rje btsun mar pa (glang lo yos kyi zla ba'i tshes bcu bzhi la) rgyad bcu rtsa dgu la (byi ba'i nyi ma la)[1697] gshegs so// de nas *d*gu**ng** lo bcu gnyis lon tsam na rtag gnyis ni shes: bshad pa ma byas pa'i dus su: yab sku 'khaṁs *kyang en tsam ngan par byung nas*[1698]: dben tsha thel gyi lcags ri'i mgul[1699]

[11.7] du sras khrid *nas*: da pha jo'ang yun ring po thub pa mi '**d**ra: nga shi na khyod ji ltar bya *snyam* gsungs pas: **sras na re:** nga nor rnaṁs pha jo'i gshegs sdzongs la gtong: pha jo'i slob ma che che rnaṁs la chos zhu zer bas: byis pa blo che bar 'dug: chos gyi zhu lugs **ma nor ba** gal che bas:

[11.8] dgyer rdor[1700] raṁ la nyon: *sam bhu ṭi d*myal pa rdog[1701] chung pa la nyon: mtshan brjod spa rba ba can pa[1702] la nyon: ma h**ā** ma ya rtog[1703] mun par can la nyon gsung: phyis mkha' spyod gshegs khar **zhal cheṁs la**: a ne **ma** jo *mo* cig *yod pa*

[1687] ST2, 36:1: *zho lung mtsher sar*, in the main text.

[1688] ST2, 36.2 has (not as a note) *chu 'o ga ga tshun chad du grags pa'i gsang sngags 'dzin pa*.

[1689] ST2, 36.3: *la sogs pa*.

[1690] ST2, 36.3: *nyan*.

[1691] ST2, 34.4: *sras kyis*.

[1692] ST2, 34.4: *zhal tshoṁs dang dbu skra la bsnod*.

[1693] ST2, 34.4: *kyi*.

[1694] ST2, 34.4: *mi*.

[1695] ST2, 34.5: *zer ba*.

[1696] ST2, 34.5: *'jal* (et passim)

[1697] ST2, 36.6: there is only one note instead of two in ST1: *gung snying bya lo glang lo yos kyi zla ba'i tshes bcu bzhi bya'i nyi ma*.

[1698] ST2, 36.6: *dben rtsaṁ snyung nas*.

[1699] ST2, 36.6: *'gul*.

[1700] ST2, 36.7: *kye'i rdo rje*.

[1701] ST2, 36.8: *rtog* (et passim)

[1702] ST2, 36.8: *pa lba ba can* (also spa lba ba can, as in ST2, 37.5.)

[1703] ST2, 36.8: *sdog*.

or lama rNgog gZhung pa." It is said that on the following year, he was born (in a **nomad's place** in the Zho valley) as the son of his father, master Chos rdor, and his mother, dPa' mo chos mo. His father made his horoscope according to *Catuṣpīṭha*, which indicated that he would become a meritorious one (famous in dBus, gTsang and Khams).[1704]

When [mDo sde] reached his fourth *or fifth* year, for the middling great donation, father, son and everyone, with Mi la ras pa as a servant, went into the master Mar pa's presence **in lHo brag**. They received from him the two empowerments of Nine Deities [*Hevajra*] and Fifteen Female Deities [*Nairātmyā*]. One day at the Dharma place where they were receiving the tantras, the boy would sometimes climb on his father's shoulder and pull his hair and beard, and sometimes would pull the master's hair and beard. His father said "this is not comfortable! Tomorrow, I shall not bring him along!" but the Venerable [Mar pa] made a declaration: "Do not leave the kid behind, bring him along! He is called rNgog gZhung pa **mDo sde** *and will become a meritorious one*. It is because he will say "I have met with the **Great Meditator** Venerable Mar pa" that my lineage will come to have a following!"

When he reached his eighth year, the Venerable Mar pa passed away at 89, (on the 14th day of the hare month of an ox year)(at the hour of the mouse).[1705] When [mDo sde] reached his twelfth year, he knew the *Two Segments.* Once there was no teaching, [mDos sde's] father's condition worsened a bit, so [Chos rdor] led his son on the slopes of the enclosed retreat-hill and said:

"Now, it seems that your father too cannot stay any longer. If I die, how do you think you will do? **The son answered**:

- I will give our possessions for Father's farewell ceremonies and will request teachings from Father's greatest disciples.

- Son, there are some of great aptitude! As it is of the utmost importance **to make no mistake** in the tradition in which you receive teachings, listen to *Hevajra* from Ram, listen to *Saṃpuṭa* from dMyal pa rDog chung ba, listen to *Nāmasaṃgīti* from sPa lba ba can, and listen to *Mahāmāyā* from rTog Mun ba can!

Later, upon leaving for Kechara, **in his testament** [Chos rdor] bequeathed to a nun

[1704] ST2, 36.2 has a different prophecy: "holder of the secret mantra and famous as far as the river Ganges."

[1705] ST2, 36, adds *dgung snying bya lo*, "as a bird-year native", and gives "at the hour of the bird" (*bya'i nyi ma*), instead of that of the mouse (*byi ba'i nyi ma la*).

[**12.1**] la: ka ba li tra ba sngon po *can* bya ba cig dang: phying khug tra ba sngon po can **bya ba** 2 gtad nas: mdo sde lo bco rgyad lon tsam na: kho rang yang chos mkhas par byed[1706]: mi rnaṁs kyang chos mkhas par byed ba cig ’ong: de tsam na ’di 2 khyod kyis kho la gtod[1707] *gzhan la*

[12.2] *ma stan 1* gsung: *d*gung lo bcu gsum lon tsam na: yab *d*gung lo drug bcu rtsa brgyad pa la: rta**’i** lo khyi’i zla ba’i tshes 3 **’brug** gyi nyi ma shar ba rting tsam na: ras kyi be**’u** phrug cig sku la gsol: thod pa’i lcang te’u *chung ngu* gcig phyag tu thogs[1708] nas: nga mkha’ spyod

[12.3] du ’gro: nga’i ’da’[1709] la ’gro ba **mi** e yod gsung zhing: dben tsha la skor ba **lan** gsum mdzad nas: ’gro mi gzhan ma byung par **dang**: **khong rang** pha ’ong cig gi steng nas *(de’i steng du mchod rten bzhengs so)* zhabs rjes *lams kyis* bzhag nas: na bun gyi gseb na yar la lcang te’u khrol lo **lo** mkha’ spyod du gshegs so//

[12.4] de nas gshegs sdzongs la sogs *pa thams cad* grub nas[1710]: dmyal pa rdog chung pa’i[1711] sa ru byon pas: nga’i bla ma’i sras *po* byon gsung nas khong rang gi khri thog tu bzhag *nas* zhabs thog[1712] che **ba**r mdzad do: chos kyang legs par **b**slabs par gda’// spa rba ba can *(ri bo ba yin)*

[12.5] de khong rang gi sku zhang yin pas *(mtshan brjod la sogs pa)* chos dang *dngos pa’i zhabs thog*[1713] che bar mdzad do// (khong ’das tsam na: bla ma gur le’u bcwo lnga pa nas bshad pa’i spur sbyong kyang mdzad gsung:)[1714] ’o[1715] yug tu raṁ gyi sar byon pas ltad mo cig gis sar phrad *nas* lo rgyus byas pas bag[1716] ma mnyes te[1717] chos kyi ’brel pa yang ma zhus gsung **ngo**: chag[1718] lo tstsha ba *(gtsang pa shes rab ’bar:)* la *(khrab rgya ri ba cig phul:)* ’jaṁ[1719] nag dang:

[12.6] saṁ b*h*u ṭi dang: **’**phran tshegs mga’[1720] yar zhus gsung: bya[1721] lo tstsha ba la yang *(dmyal pa zla ba ’od zer:)* **’**phran tshegs mga’ zhus *gsung*: ra lo tstsha ba *(rdo rje grags:)* la saṁ b*h*u ṭi dang: phag mo ra lugs zhus *gsung*: **s**pa tshab

[12.7] lo tstsha ba (’phan yul ba nyi ma grags pa:) la ’jaṁ nag la sogs pa **’**phran tshegs mga’ zhus *gsung ngo*: der **lo bcwo brgyad lon pa’i steng:** chos mkhas par yod tsam na: a nes ka ba li dang: phying khug 2 btad pas: ka ba li nang nas rtag gnyis rngog lugs su grags pa ’di dang: phying khug

[12.8] nas gdams ngag **na ro’i** chos drug du grags pa ’di byung gsung ngo: de nas lan cig bla mas *(dgung lo nyi shu rtsa lnga lon tsam na)* gtsang du byon chu mig tu bzhugs pas[1722]: jo mo sgre mo’i gsung nas: **b**tsun chung ma kun chang la chu rgyob: nga’i mkhan po chu mig ring mo’*i gron khang*

[1706] ST2, 37.1: *seṁ*, also in the next phrase.
[1707] ST2, 37.1: *stod*.
[1708] ST2, 37.2: *bsnaṁs*.
[1709] ST2, 37.3: *zla*.
[1710] ST2, 37.4: *pa dang*.
[1711] ST2, 37.2: *gi*.
[1712] ST2, 37.2: *rtog*.
[1713] ST2, 37.5: *zang zing gi long spyod che bar*.
[1714] This is not a note in ST2, 37.5.
[1715] ST2, 37.5: *’u yug*.
[1716] ST2, 37.6: *cung*.
[1717] ST2, 37.6: *skad*.
[1718] ST2, 37.6: *phyag*.
[1719] ST2, 37.6: *’dzaṁ* (et passim).
[1720] ST2, 37.6: *’ga* (et passim).
[1721] ST2, 37.6: *ja*.
[1722] ST2, 39.1: *dus su*.

[12] a book-case with a blue lining together with a felt bag with a blue lining. He told her: "When mDo sde will turn eighteen, he will become one who makes himself as well as others learned in the Dharma. At that time, hand these two over to him, *but do not show them to anyone else*!

When [mDo sde] reached his thirteenth year and his father was in his sixty-eighth year, just after sunrise on the **dragon** third day of the dog [seventh] month of a horse year, while wearing a thin cotton fabric over his body and carrying a **small** skull hand-drum (*thod pa'i lcang te'u*), he said: "I'm going to Khecara; is there someone going with me?" He did three circumambulations around the retreat place, and as no one else came, he stepped on a boulder *(over which a stūpa has been built)*, left a *dazzling* footprint, and ascended in the mist towards Kechara with the sound of the hand-drum.

After completing all the funerary farewells and the rest, [mDo sde] went to dMyal pa rDog chung pa's place. The latter said: "My master's son has come!" and he installed him on a throne, paying him great respect, and also teaching him well the Dharma. sPa sBa ba can *(from Ri bo)*, being [mDo sde's] maternal uncle, paid him great respect with both teachings *(on Nāmasaṃgīti and so on)* and material things. When he passed away, it is said that lama [mDo sde] led the cremation as taught in the fifteenth chapter of the *Pañjara*). When [mDo sde] arrived at Ram's place at 'O yug, there was a feast and so they chatted. Being slightly unhappy about that, [mDo sde] said that he did not request a dharma-link. He received Black Jambhala and *Saṃpuṭa* as well as a few minor transmissions from Chag Lo tstsha ba *(gTsang pa Shes rab 'bar)(and offered to him a painted saddle)*. He also received minor transmissions from Bya Lo tstsha ba (dMyal pa Zla ba 'od zer), *Saṃputa* and *Vajravārāhī* of the Rwa Tradition from Rwa Lo tstsha ba (rDo rje grags), and minor transmissions such as Black Manjuśrī and others from **s**Pa tshab Lo tstsha ba (Nyi ma grags, from 'Phan yul). Then, when [mDo sde] was **in his eighteenth year** and learned in the Dharma, the nun handed him over the book-case and the felt bag. He said that in the book-case he found what is known as the *Two Segments of the rNgog Tradition*, and in the felt bag the instructions known as the Six Doctrines **of Nāropa**.

Then one day, *(when he reached his 25th year)*, Lama [mDo sde] went to gTsang and stayed in Chu mig. Jo mo sgre mo said: "All of you, young nuns, pour water in the beer! My mkhan po is weary in a faraway *guest-house* of Chu mig!"

[**13.1**] *na* ’o rgyal gsung: nang par ’byal bas[1723] gdung khang chung ngu cig phul nas: ’di’i nang na: rje mar pa’i gdung: mid la’i dbu skra *dang* phyag sen**: gzhan yang bod kyi mkhas grub gong ma rnaṁs kyi dbu skra: phyag sen: sku gdung ring srel rnaṁs** bzhugs pa yin pas gar yang ma btang bar tshags mdzod gsung// g.yog mo btsun ma *mo* lo

[13.2] bdun bcu tsam lon ba 2 gda’ *skad*: nub cig *bla mas* bud med[1724] cig gi sar bzhud **dgos** bsams[1725] nas mdor byon bas[1726] jo mo sgre mo dang ’byal nas **jo mo na re**: do nub ma ’byon par sang dgongs gzhud *dang* sras cig skye bar[1727] *cig* ’dug gsung: *de nas* sang dgongs byon pas sras gcig byung ba de[1728] slob dpon jo tshul

[13.3] lo bzhi lon tsam na sgom ma ske rags rgya ma bcings pa cig gis khyer[1729] byung nas zla ba bzhi tsam sdad[1730] nas song **dus** phyi**s** ma byung gsung: (des *na* gong ma ba la gtsang tsha *b*rgyud *cer* zer *ro*// slob dpon jo thog gi jo mo ’phrang po **ba** lha cig ’bum rgyan **la** rgyal tsha *ra mo* sku mched *2* ’khrungs *pas* ’og ma ba la rgyal tsha rgyud *ces* zer ro//) **gong gi** gdung rten **de** khaṁs pa ’gro ba cig gis *ci byas kyang ma nyan par khams su khyer*[1731]*: phyis* yang bla mas gtsang du byon *nas* chu mig du bzhugs pas: jo mo

[13.4] sgre mo’i gsung nas: btsun chung ma kun chang la chu rgyob: nga’i mkhan po chu mig ring mo’i ’gron khang na ’o rgyal

[13.5] gsung: nang par ’byal *ma thog tu*[1732] gzhan ci yang mi gsung bar: ngas phul ba’i gdung brten[1733] de yod dam gsung: bla mas yod gsungs pas: *jo mo na re:* yod pa yod khaṁs na yod ’ang gsung *nas*: yang **dngul** gdung brten khru gang ba cig khyer byung nas phul nas[1734]

[13.6]’di’i nang na: rje mar pa’i gdung: mid la’i dbu skra *dang* phyag sen: khyed rang gi sku tshe snga[1735] ma’i gdung rnaṁs bzhugs pa yin bas: ’di gar yang ma btad gsung nas dbus su gdan drangs pa ni: **la lta** gdung khang chen mo’i nang nas bzhugs par gda’// shud bu[1736] lo tstsha

[13.7] ba (gtsang pa ’byung **gnas** rgyal **mtshan**:) la nor *nor* brgyun ma zhus: ras chung pa’i sar byon **gsungs** pas *lo rgyus byas pas:* mi la’i lo rgyus mi gsung bar: ti **phu** *ba*’i *lo rgyus cig su*[1737] gsungs pas bag ma mnyes par: de**’i** res la chos ’*phrel* ma zhus gsung: ’chi ru’i rnyan chung[1738] lo

---

[1723] ST2, 38.1: *’jal ba dang.*

[1724] ST2, 38.3: *mu tra.*

[1725] ST2, 38.3: *dgongs.*

[1726] ST2, 38.3: *pa dang*.

[1727] ST2, 38.3: *’khrungs par*.

[1728] ST2, 38.4: *’di*.

[1729] ST2, 38.4: *khur*.

[1730] ST2, 38.4: *gdad*.

[1731] ST2, 38.4-5: *’bul ba dang zhu ba cher byas nas khaṁs su gdan drang ngo:* .

[1732] ST2, 38.6: *ba dang.*

[1733] ST2, 38.6: *khang (et passim)*

[1734] ST2, 38.7: *ste.*

[1735] ST2, 38.8: *sngon.*

[1736] ST2, 38.8: *shod bu.*

[1737] ST2, 39.1: *kho na.*

[1738] ST2, 39.1: *’ching ru’i snyan chung.*

[13] She met him the next morning and, having offered to him a small reliquary, she said: “In this are Lord Mar pa’s bones and Mi la ras pa’s hair and nails. **There are also hair, nails, bones and relics of the learned and accomplished Tibetan masters of old.** Do not bring it anywhere and leave space [in it]!” It is said that there was two seventy-year-old venerable attendants present.

One evening, the Lama thought he should go to his *mūdra*’s place. When he reached the crossroads, he met Jo mo sgre mo, who told him: “Don’t go tonight! Go tomorrow and a son will be born!” Then, he went on the next day, and a son was produced: it was Master Jo tshul. When he reached his fourth year, he was brought [to his father’s place], fastened in a large meditation belt. He stayed only four months and left, being told to come back later. ([He gave rise] to the higher [rNgog line], called the gTsang tsha line. Master Jo thog and his wife ’Phrang po lHa cig ’bum rgyan gave birth to two rGyal tsha sons, *[one being] Ra mo*, who formed the lower [rNgog line], called the rGyal tsha line.)

Someone going to Khams who had not listened to what was to be done with the reliquary brought it to Khams.[1739] Later, when the lama returned to gTsang, he stayed at Chu mig. Jo mo sgre mo said: “All of you, young nuns, pour water in the beer! My mkhan po is weary in a faraway guest-house of Chu mig!” *As soon as* she met him in the morning, she did not say anything else than: “Do you have the reliquary I gave you?” The lama replied “I do,” *so Jo mo retorted*: “Do you have it or is it in Khams?” Having brought another **silver** reliquary of one cubit, she offered it and said: “In this are Mar pa’s bones, Mi la ras pa’s hair and nails, and bones from your previous incarnation. Don’t send it anywhere!” He carried it [back] to Central Tibet and **now** it is set in a great relic house.

He received Vasudhārā from Shud bu lo tstsha ba (’Byung **gnas** rgyal **mtshan** from gTsang). When he went to Ras chung pa’s place, [Ras chung pa] *taught [life]-stories*. He did not tell Mi la’s story but *only gave accounts* about Tipupa. [Today] was a little uneasy and did not start a Dharma relationship at that time. He received a few minor [teachings] from ’Chi ru’i snyan chung Lo

[1739] Alternative vesion in ST2, 38.4-5: “Someone going to Khams, having made offerings and requests, brought the above-mentioned reliquary to Khams.”

[13.8] tstsha ba (dar ma grags:[1740]) *la yang 'phran tshegs 'ga' zhus*: zangs dkar lo tstsha ba (mnga' ris pa 'phags pa shes rab) *la'ang chos 'brel 'ga' zhus*: ba ri lo tstsha ba (khams pa rin chen grags:) *la sogs ba* **rnaṁs la cho[s 'bre]l zhus gsung pa**: *lo tstsha ba brgyad tsam la sngags dang mtshan nyid mang tu zhus gsung*:[1741] bo dong du brnur[1742] nyi ma la rnal 'byor gyi rgyud *de nyid* 'dus pa tsan[1743] chad tshang bar

[**14.1**] zhus gsung ngo// bla ma dol gyi 'khar rgyab na bzhugs pa'i dus su *(lha mo bco lnga dbang skur mdzad cing)*: rje *btsun* mar pa'i *tsha mo cig byung nas*[1744]: de la **bla mas** dar yug gcig gnang[1745] nas: nga sang phod[1746] **gzhung du** chos 'khor gcig byed pas de *tsam na*[1747] **'**byon par zhu gsungs pas: **dbon mo na re de ltar bya gsungs pas:** sang phod de: rje btsun nyid kyis

[14.2] dang po rgya gar nas gdan drangs pa'i ***tsan dan gyi*** sgo mangs chung chung cig gi stod na jo bo na ro pa'i dbu skra: phyag sen dang: thugs dam bzhugs *zhu nas* zhabs bsdaṁs pa **1** yod pas: khong rang grongs[1748] pa'i dus su gdung rus rnaṁs sgo mangs de'i smad na bzhugs pa la: sras bya rid 'khor los:

[14.3] pha jo 'khar la mnyes pa yin zer[1749] nas: <sgo mangs de'i zhabs **b**rtol *nas* gdung rus rnaṁs ras kyi skye 'u[1750] cig du blugs **sras** mkhar[1751] gyi skar[1752] khung cig du bzhugs **su gsol** nas: mi'i zho nyes char nyes *la sogs pa* **kyi** bsrung ba byed:>[1753] sgo mangs bskur pa **ba bya ba'i bsdengs pa cig** la btsongs skad: der rje btsun gyi gdung rnaṁs **dbon** mos gdan drangs byung nas *(ser 'phreng dang rol mos 'o re thang nas bsu ba byas:)*: nya mo gyur du[1754] **(gzhung mda')**: bla ma **mdo sde** la phul bas *mnyes nas*: (**bla ma'i gsung nas)** nga **rngog mdo sde bya ba** sngags pa dam tshig can yin gsung *ngo*: der chos 'khor chen po

[14.4] mdzad pas **dus su**: 'phyims chen po brtson 'grus seng ge [1755] *(chos 'khor tshar ba'i sku'i 'dad kyi tshogs dpon la gdan drangs:)* **(snar thang gi mkhan po naṁ mkha' grags pa)** dang: **bdag nyid chen po** gsang phu**'i gdan sa** ba phya pa[1756] *chos kyi seng ges* gtso mdzad pa'i dge ba'i bshes gnyen gdugs *b*skor ba rang suṁ *b*rgya dang drug bcu rtsa 2 'tshogs skad: de rnaṁs kyis **rje btsun gyi** dbon mo de la phyag

---

[1740] ST2, 39.02: *dar ma dpal.*

[1741] ST2, 39.2: *mdor na rje btsun chen pos thog grangs pa'i lo tstsha ba kho na'i bla ma bcu rtsam brten: sngags mtshan nyid kyi chos kyang mang du zhus.* "In short, the Great Venerable relied on ten masters who were leading translators and he received many teachings on [the path of] mantras and of characteristics.

[1742] ST2, 39.2: *snur.*

[1743] ST2, 39.2: *man.*

[1744] ST2, 39.3: *dbon mo 1 byon:*

[1745] ST2, 39.3: *phul.*

[1746] ST2, 39.3: *bod (et passim).*

[1747] ST2, 39.3: *dus.*

[1748] ST2, 39.5: *gshegs.*

[1749] ST2, 39.5: *gsung.*

[1750] ST2, 39.6: *skye chung.*

[1751] ST2, 39.6: *'khar.*

[1752] ST2, 39.6: *dkar.*

[1753] In ST1, the passage between angle brackets has been added with an asterisk at the bottom of the page. An omission must have been remarked by the copyist.

[1754] ST2, 39.7: *skyur la.*

[1755] ST2, 39.7: *'chims.*

[1756] ST2, 39.7: *cha pa gnyis kyis.*

tstsha ba *(Dar ma grags)*. He also established *a few dharma links* with Zangs dkar lo tstsha ba (’Phags pa shes rab from mNga’ ris) and Ba ri Lo tstsha ba (Rin chen grags from Khams): *thus is he said to have much studied [the paths of] mantras and of characteristics with eight translators*. In Bo dong, he completely received the yoga tantras from the *Compendium of Principles* onwards from brNur Nyi ma. [14]

When Lama [mDo sde] was staying at ’Khar rgyab in Dol *(to transmit the empowerment of the fifteen goddesses [of Nairātmyā])*, one of the Venerable Mar pa’s niece came. The **Lama** offered a roll of silk to her and said: “I will make a religious council **in gZhung** next year, please come on that occasion!” **The niece replied that she would do like this.**

The next year: The Venerable [Mar pa] himself had placed in the top of a small **sandalwood** portable altar brought from his first journey to India the hair of lord Nāropa, his nails, and his meditation statue, and he had sealed its foot *by melting it*. When [Mar pa] died, his bones were enshrined in the bottom of that altar. His son Bya rid ’khor lo, stating that his father loved his mansion, had pierced the foot of the altar and transferred the bones in a small cotton sack. He placed them on a window of the mansion in order to protect it against the damage by men, rain, *and other things*. It is said that he sold the altar to someone who was asking it. Then, she **the niece** went to take the bones of the Venerable. *(She was greeted by lines of monks playing music)* in Nya mo skyur **(in Lower gZhung)**. She offered them to Lama [mDo sde], *who was pleased*. **The Lama said:** “I am **called rNgog mDo sde** and I am a tantrist who holds his *samaya*s!” Then, they made the great religious council. It is said that three-hundred-and-sixty-two spiritual friends protected by a parasol assembled, led by the great mChims brTson ’grus seng ge (**or the abbot Nam mkha’ grags from rNar thang)** *(who was invited as the main priest for the funeral service at the end of the council)* and Phywa pa *Cho skyi seng ge*, the **great seat-holder of** gSang phu. They made prostrations and circumambulations in front of the **Venerable**’s granddaughter,

[14.5] skor byas pas: mo[1757] phyag rten gyis nub pa **tsaṁ** byung: bla mas mo la g.yu snying[1758] rdog po cig dang: za ’og yug cig: rtags sba cag[1759] khug pa cig **gis sna grangs pa’i phyag sdzas mang po cig)** *dang* dgu tshan cig phul *gsung* ngo// *d*gung lo bdun bcu rtsa bdun la

[14.6] (nya mo gyur du:) khyi yi lo phag gi zla ba’i tshes bcu cig la gshegs so// slob dpon jo tshul ni[1760]: lo bco lnga la rtag gnyis gsungs: bcu bdun la: sgam po pa’i drung du byon nas rab *du* byung **mdzad**: khrid thams cad *(yab dang 2 la)* tshar bar zhus: dmar (rgyal ba lo:) la *mngon ba dang*: zhi byed sgrol ma rnam 3 zhus gsung ngo//

[14.7] slob dpon jo thog gis: *d*gung lo bcu gnyis la: chos gsungs **(gur rtag)**: chos lung rnaṁs **(rje btsun mar pa dang kyi bye ma lung pa: khaṁs pa shes rab rdo rje nas rgyud pa’i dbang rgyud: rgyud ’grel dang bcas pa)** yab la tshar bar zhus: *b*rdog mun **p**a can la ’phags skor rnaṁs gsan: yar lungs su spug rgya ga ra tsha[1761] la: rtsa ltung rgya che**r** ’grel **pa** gsan: ’phan yul du: mar pa

[14.8] mgo yags gyi slob ma cig la: mgon po be c*h*on zhus: de’i tig chung yang mdzad gsung ngo// slob dpon rgyal (tsha) ra mo **che ni:** *d*gung lo drug lon tsam na: ’bri klog thams cad shes pa cig byung: dgu lon tsam na phyag na rdo rje stobs chen bshad:

[**15.1**] bcu gcig lon nas yab ’das[1762]: de’i dus su tshogs su btaṁ bdang bas[1763] thams cad mos pa skyes so: **sprul sku rtsed med du grags:** de’i lo la rtag gnyis *kyang* gsungs: chos lung **dbang bka’** thams cad mes po la tshar bar zhus gsung ngo// bla ma kun dga’ ni: bu chung zla ba bdun lon pa’i dus su yab ’das **so**: *zla*

[15.2] *ba* brgyad lon *tsam na ma’i mdun nas phar ’gro tshur*[1764] shes pa cig byung: *dgung* lo drug *tsam* lon tsa na: *’jam dpal* mtshan brjod blo la[1765] ’don shes pa shes pa cig byung: mes po bla ma chen po’i chos grar ka ba li khyer nas dpe**’ g**non pa cig byung: chos *kyi* lung thams cad bla

[15.3] ma mdo sde la zhus: *d*gung lo bcu lon tsa na: mes po gshegs: de’i lo la slob dpon lcam me ’khrungs: slob gnyer gyi ’phro rnaṁs slob dpon jo ras mdzad: *d*gung lo bcu gsuṁ la chos gsungs: bcu gsuṁ nas chos mkhyen kyang thun gcig ma chag[1766] par: slob dpon jo ra la gsan gsung **ngo**:

[15.4] dpe**’** cha yang: yab kyi phyag dpe**’ r**nying[1767] pa *kun* la ma ltos par: rngog pa’i chos skor rnams la gzab[1768] bris zhi tshe**gs** mdzad: bla ma lho nag smon laṁ khri la: gdan bzhi dang: sam bhu ṭi *dang*: ’jam dpal la sogs pa mang du zhus gsung **ngo**: de**’i** gong du mal nag gis khaṁs su phyin[1769] pas: thams cad

---

[1757] ST2, 40.1: *khong (et passim)*
[1758] ST2, 40.1: *rnying.*
[1759] ST2, 40.1: *rta rba lcag.*
[1760] ST2, 40.2: gyis.
[1761] ST2, 40.3: *dza.*
[1762] ST2, 40.5: *rtsa na yab gshegs.*
[1763] ST2, 40.5: *btang pas.*
[1764] ST2, 40.6: *dus su phan tshun ’gro*.
[1765] ST2, 40.7: *nas.*
[1766] ST2, 40.8: *phyag.*
[1767] ST1, 15.4: *snying.*
[1768] ST2, 40.7: *bzabs.*
[1769] ST2, 41.1.: *byin.*

and she was showered with gifts: the Lama gave her **many possessions such as** a piece of an ancient turquoise, a roll of brocade, a pair of bamboo horsewhips and a set of nine things.

When he reached his 77th year, he passed away **in Nya mo kyur** on the 11th day of the pig month of a dog year.

Master Jo tshul taught the *Two Segments* in his fifteenth year. In his seventeenth year, he was ordained in front of sGam po pa. After he received all explanations *(from [Sgam-po-pa] and his own father)*, he is said to have received the three–*Abhidharma*, Zhi byed and Tāra–from dMar (rGyal ba lo).

[VII. rGyal tsha branch]

Master Jo thog gave teachings **(on *Pañjara* and *Hevajra*)** in his twelfth year. He received all instructions, reading transmissions, **(empowerments and commentaries coming from the Venerable Mar pa, Kyi Bye ma lung pa and Khams pa Shes rab rdo rje)** from his father. He listened to the Cycle of the Nobles (*'Phags skor*) from rDog Mun pa can. In Yar lung, he listened to the *Great Commentary on Root Downfalls* from sPug rGya ga ra **dz**a. In 'Phan yul, he requested the Protector with a Club from a disciple of Mar pa mGo yags, and also composed a short commentary on it.

Master rGyal tsha Ra mo **che**: when he reached his sixth year, he knew perfectly how to read and write. In his ninth year, he taught Vajrapāṇi sTobs chen. [15] His father died when he was in his eleventh year. At that time, he gave a speech to the assembly: everyone was inspired **and he was recognized as an indisputable body of emanation**. On that year, he *also* taught the *Two Segments*. It is said that he received all teachings, reading transmissions **and empowerments** from his grandfather [Mdo sde].

[VIII. gTsang tsha branch, Kun dga' rdo rje]

When Kun dga' rdo rje was a young infant of seven months, his father died. At eight months, he could go back and forth in front *of his mother*. In his sixth year, he was able to recite the *Nāmasamgīti* from memory. He brought book-cases to the Dharma assemblies of his grandfather, the great lama, and covered texts with them. He received all dharma transmissions from Lama mDo sde. When he reached his tenth year, his grandfather died, and on that year master lCam me was born. Master Jo ra took over the rest of his education. In his thirteenth year, he taught the Dharma, and it is said that from then on, even though he knew that teaching, he would listen to every single session of Master Jo ra. With regards to texts, he did not rely on all of his father's old copies but carefully wrote the rNgog's Dharma cycles. It is said that he requested a lot from Lama lHo nag sMon lam khri, such as *Catuṣpīṭha*, Saṃputa, *Mañjuśrī*, etc.

Before that, Mal nag had gone to Khams, and everyone

[15.5] na re: khyed rngog pa'i slob ma e yin zer: da rngog pa la chos zhus dgos par 'dug snyam nas: dbus su bla ma chen po'i drung du 'ongs: go ne pu tsa cig kyang phul nas gdams ngag zhus: gdam ngag sna re la gser srang re phul: gser srang suṁ **b**cu tsa drug phul: phyis

[15.6] gser srang gang phul nas gdams ngag zhu dgos zhus[1770] pas: da gdams pa med gzhung nyon gsung[1771]: de nas gzhung *m*nyan: dbang skur zhus nas: rngog pa'i gdams pa la khong las (mal ka ba can pa'i pha spun[1772] yin) mang pa med gsung: khong dang po dags po lha rje'i slob ma yin: lha rjes: khong la

[15.7] zangs ri de'u khyung tshang naṁ mkha' lding la sgoṁs gsung lung bstan: khong gis der sgoṁs pas snang *g*.yel chung bar byung nas: de'i gong na bye**'u** tshang dgon pa bya ba **na** snang *g*.yel shin tu che ba 1 'dug nas: de na bzhugs pa'i (sa dgu pa thob gsung:) spyan mngar: bla ma

[15.8] kun dga' byon nas dbyar dgun 3 tsam bzhugs: rngog pa'i gdams ngag thams cad[1773] tshar bar zhus: tshangs spyod kyi sdoṁ pa cig **kyang** zhu byas pas: de gtsug mdzad pas mi yong (gdung rgyud spel dgos *pa yin mod*[1774]:) yar *la* bzhud gsung nas: ma gnang par yar la 'ongs gsung: (*d*gung lo nyi shu rtsa bdun la khaṁs su byon)

[**16.1**] rtsags 'khar rgyab pa la lha mo bcwo lnga'i dbang zhus: ghos[1775] ri khrod dbang phyug la tshe bsgrub la sogs man ngag *man ngag* mang pa cig zhus: 'chos[1776] pa dar brtson la zhi byed zhus: grub thob shol po ba la rnaṁs 'joṁs zhus: dpal rga lo[1777] la phyag na rdo rje lcags sbubs ma zhus:

[16.2] slob dpon *mi nyag*[1778] la riṁ lnga zhus: gzhan yang slob dpon 'ga' la gdams ngag mang du zhus gsung ngo// **(mdo khaṁs su byon te rngog pa'i gdul byar rtogs pa thams cad kyis 'bul ba dang zhabs tog rgya chen po byas te rngog pa'i zhal ngo mdo khaṁ*s su* byon pa'i sngon ma'o//)** bla ma gzi rjid ni: yab la *chos thams cad*[1779] tshar bar zhus *gsung ngo*: **gung lo nyi shu rtsa lnga la nyangs stod stag tshang du byon:** *(lo nyi shu rtsa lnga la smon 'gror)* ba char mkhan po'i drung du snyen sdzogs **(rab byung gyi snga ma'o)** mdzad: 'tshe[1780] mi shakya dbang phyug la gdams pa *sna kha* 'ga' zhus:

[16.3] lce ston sangs rgyas 'buṁ la: sam bhu ṭi **dang**: gsang ldan *2* zhus: slob dpon lho skya *(dkon mchog dpal)* la gsang ldan *dang*: sam bhu ṭi **gnyis** zhus: mdo chen mo ba'i slob dpon[1781] la gcod[1782] **skor rnaṁs** zhus: chos rje lo ras la thub lnga: rab bdun ma: chig chog ma[1783] la sogs pa zhus so//

[1770] ST2, 41.3: *byas.*

[1771] ST2, 41.3: *nyon gsungs.*

[1772] ST2, 41.4: *dpun.*

[1773] ST2, 41.5: *rnaṁs.*

[1774] ST2, 41.6: *gsung.*

[1775] ST2, 41.6: *mgos.*

[1776] ST2, 41.6: *'chus.*

[1777] ST2, 41.7: *sga lo.*

[1778] ST2, 41.7: *nyi ma.*

[1779] ST2, 41.8: *rngog skor thams cad.*

[1780] ST2, 41.8: *mtshe mi.*

[1781] ST2, 42.1: *bla ma.*

[1782] ST2, 42.1: *spyod.*

[1783] ST2, 42.1: *tshig chag ma.*

had asked him: “Are you a student of the rNgog?” Thinking that he should request teachings from the rNgog, he came to dBus in front of the great lama [rNgog mDo sde]. He offered a *gaṇacakra* and requested instructions. He would offer one measure of gold for each of the various instructions, thus offering thirty-six measures of gold. Then, he offered more measures of gold and wanted to request instructions. He was told that there were no more instructions and so to receive scriptures. Then, he learned scriptures and received empowerments. It is said that no one had more rNgog instructions than him (he was a relative of Mal ka ba can). He was first a disciple of the Dwags po Physician [sGam po pa]; the Physician enjoined him to meditate in Zangs ri De’u Khyung tshang Nam mkha’ lding. Having meditated there, it felt too little isolated. As there was higher up a very solitary hermitage called Bird-Nest Ermitage (Bye’u tshang dgon pa), he stayed there (and it is said that he reached the ninth *bhūmi*). Lama Kun dga’ came there in his presence and stayed three summers and winters, completely requesting all the instructions of the rNgog. Although he requested vows of pure conduct from him, [Mal nag pa] replied that it was not fitting (as he needed to spread his family line). He told him to depart, not granting him [the vows]. ([So], in his twenty-seventh year, [Kun dga’] went to Khams) [16]. He requested the empowerment of the fifteen goddesses from rTsags ’Khar rgyab pa. He received many key instructions on the long-life practice and so on from **mGos** Ri khrod dbang phyug. He requested Zhi byed from ’Chus pa Dar brtson. He received Vajravidāraṇa from the siddha Shol po ba. He received Vajrapāṇi Covered in Iron (*lcags sbubs ma*) from the glorious rGa lo, and the Pañcakrama from master Mi nyag. It is also said that he received many instructions from several other masters. **(Having gone to mDo khams, thanks to his realization in the rNgog pa fields of knowledge, he provided [disciples] with great offerings and service. He was thus the first hierarch of the rNgog to go to mDo khams).**

[VIII-1. gZi brjid grags pa]

Lama gZi brjid completely received all **rNgog cyles** from his father. **In his twenty-fifth, he went to sTag tshang in Nyangs stod** *(in Mon ’gror)* and was ordained by Ba phyar mKhan po (**this is the stage before full ordination)**. He requested several instructions from ’Tshe mi Shākya dByang phyug and received *Saṃputa* and *Guhyāpanna* from lCe ston Sangs rgyas ’bum. He received *Guhyāpanna* and *Saṃputa* from Master lHo skya *(dKon mchog dpal)*, and the gCod cycles from Master mDo chen mo. From the Dharma Lord Lo ras pa he requested the Five Capabilities, the Seven Excellent [Interdependent Connections], the Chig chog ma and so on.

[16.4] **(de'i cung po)** slob dpon rgyal po dga' ni: chos thams cad[1784] yab la tshar bar zhus: slob dpon lho skya la bde mchog mar do'i lugs kyis skor thams cad[1785]: 'jigs byed skyo lugs kyi skor: sam bhu ṭi'i rgyud phyis ma rnaṁs zhus: rgya pho ba lung pa la gur rigs sdus kyi dbang *bka*' dang: 'jigs byed skyo lugs kyi dbang **rnaṁs**

[16.5] zhus: bla ma mkhas chen pa la dbang phyug chen po'i dug dbang rnaṁs zhus// *slob dpon jo gsal gyis sman bslabs gsung ngo// bla ma* seng ge sgras ni[1786]: bla ma gzi brjid dang: *slob dpon rgyal po dga' 2* la rngog *pa'i* chos rnaṁs tshar bar zhus: khyad par du: la ba pa'i dbang

[16.6] bskur: *dril bu ba'i lus dkyil*: lu i pa'i mngon rtogs: sngags don rnaṁs gzigs: saṁ bhu ṭi'i rgyud phyi ma: 'dzaṁ nag: ra hu la: sa bdag srog 'khor rnaṁs yab la zhus: *bla ma bsas pa la: sgrol ma lha bcu bdun ma'i dbang bka': nyi ma sbas*

[16.7] *pas mdzad pa'i sgrub thabs rnaṁs dang: a li ka li zhus: slob dpon kun bsod la: rdo rje sgrol ma'i lus skyil: sgrol ma la sna tshogs pa'i brgyud: sgrol ma spyan bdun ma rnaṁs zhus: bla ma en ker ba la: sgrol ma dkar mo: zab mo*

[16.8] *snang byed zhus: stag lung pa'i dbon po la sgrol ma mtshan brgya rtsa brgyad ma zhus:* slob dpon rdor rin (srin po ri pa) la phag mo spyal lugs dang: ba ri bas sgyur ba'i sgrub thabs rgya rtsa: tshad ma bsdus pa: rgyud bla ma: 'jig rten bstan ba: sa laṁ gyi stong thun

[**17.1**] rnaṁs zhus: slob dpon rin gzhon la bde mchog rtsa rgyud zhus: *slob dpon gzhon nu rin la spar spu ba'i lugs kyi dho ha zhus*: rgya pho ba lung pa la gur rigs sdus kyi dbang *bka*': 'jigs byed skyo lugs kyi dbang *bka*' zhus: *bla ma tshul chen*

[17.2] *pa la: 'jigs byed skyo lugs kyi skor: zab mo snang byed zhus: bla ma lha pa la: gsang (ba) 'dus pa ye shes zhabs lugs zhus: bla ma gan ba ba la gsang 'dus mar pa'i lugs kyi dbang: rtsa rgyud dang: 2 med rnam rgyal zhus: bla ma la mo ba la bka*'

[1784] ST2, 41.1: *rngog skor rnaṁs.*

[1785] ST2, 42.2: *dang.*

[1786] For this part, the content and order of ST1 and ST2 are too different to make a common edition. The part which is only in ST1 is in italics. ST2, 42.3-8: *slob dpon seng ge sgras ni (de sras che ba) : khu bo bla ma gzi brjid dang: yab la rngog chos rnaṁs tshar bar zhus: khyad par du bla ba pa'i dbang bskur: lu hi pa'i mngon rtogs: dril bu ba'i mngon rtogs: lus dkyil: sngags don rnaṁs gzigs: saṁ bu ṭi'i rgyud phyi ma: 'dzaṁ nag: ra hu la: sa bdag srog 'khor rnaṁs yab la zhus: rgya pho ba lung pa la rigs bsdus kyi dbang: 'jigs byed skyo lugs kyi dbang rnaṁs zhus: srin po ri pa slob dpon rdor rin la phag mo bcal lugs: ba ri'i sgrub thabs rgya rtsa tshad ma bsdus pa: rgyud bla ma: 'jig rten bstan pa rnaṁs kyi laṁ gyi stong thun la sogs pa zhus: slob dpon rin gzhon la bde mchog rtsa rgyud zhus: 'bri gung du gcung rin po che dang: (rin po che) bkra shis bla ma (stag lung ba'i bla ma'i dbon po la sgrol ma mtshan rgya rtsa brgyad ma zhus) gnyis la khong rang gi lugs kyi 'khrid rnaṁs zhus: chos rje rang byung rdo rje la: sku gsuṁ ngo sprod zhus: gzhan yang bla ma bcu rtsaṁ la sgrol ma'i rigs thams cad zhus: (gzhan yang bla ma man lungs pa la: ro snyoṁs skor drug dang: te pu'i lugs kyi mdo ha zhus: bla ma legs grub pa la byaṁs khrid zhus: 'gro mgon 'phags pa la dbu ma seṁs bskyed zhus: bla ma bzang po pa la gsang ldan gyi dbang zhus:) gdaṁs ngag kyang mang du zhus so: gung lo 4 bcu rtsa gsuṁ nas rtsa lnga'i bar du: bla ma rin chen mdo khaṁs su gzhugs pa'i phul du: chos dung 'bud pa yang mdzad do:*

[VIII-2. rGyal po dga’]

(His younger brother) Master rGyal po dga’ completely received the rNgog cycles from his father. From Master Lo skya, he requested all *Cakrasaṃvara* cycles according to Mar pa do pa’s tradition, the *Vajrabhairava* cycle according to sKyo’s tradition, as well as the *Later Saṃpuṭatantra*. From rGya Pho ba lung pa, he received empowerments on the Combined Families of *Pañjāra* as well as the *Vajrabhairava* empowerment according to sKyo’s tradition. From Lama mKhas chen pa, he received the *dug dbang* of Maheśvara.

It is said that Master Jo gsal learned medicine.

[VIII-3. Seng ge sgra]

Master Seng ge sgra completely received the rNgog teachings from Lama gZi brjid *and Master rGyal po dga’*. More specifically, he requested from his father the empowerment of Lwa ba pa’s [tradition of Cakrasaṃvara], *the body maṇḍala from Ghaṇṭāpā’s [tradition]*, and the *abhisamaya* from Lūyipa’s [tradition]. He [also received] the *Explanation of the Meaning of the Name-mantra*, the *Later Saṃpuṭatantra*, *Black Jambhala*, *Rahula*, and the *Sa bdag srog ’khor*. *He requested from Lama bSas pa the seventeen-goddess Tārā empowerment, the sādhanas composed by Ravigupta and the Alikali. From Lama bKun bsod, he requested Vajratārā’s Body Maṇḍala, the Tantra on the Various Tārās and Seven-Eyed Tārā. From Lama En ker ba, he requested White Tārā and the Zab mo snang byed. From the uncle of the sTag lung pa, he received the hundred and eight names of Tārā.* From Master rDor rin (from Srin po ri) he received [*Vajra]vāhāri* of the sPyal tradition, the *Hundred Sādhanas* translated by Ba ri [Lo tsā ba], the *Pramāṇa Summary* [of Phya pa Chos kyi seng ge], the *Unsurpassable Continuity*, the *Teaching on the Universe*, and the *Essential Expositions of the Stages and Paths*. [17] From Master Rin gzhon, he requested the *Root Tantra of Cakrasaṃvara*. *From master gZhon nu rin he received the Dohas according to sPar spu ba’s tradition.* From rGya pho ba lung pa, he requested the empowerment of the Combined Families of *Pañjara* and *Vajrabhairava* according to sKyo’s tradition. *From Lama Tshul chen, he requested the cycle of Vajrabhairava according to sKyo’s tradition and the Zab mo snang byed. From Lama lHa pa, he requested Jñānapāda’s tradition of Guhyasamāja. From Lama Gan ba pa, he requested the empowerment of Mar pa’s tradition of Guhyasamāja, its root tantra and the gNyis med rnam rgyal. From Lama La mo ba,*

[17.3] *sdaṁs laṁ rim zhus: slob dpon shakya seng ge la sdom ba nyi shu ba zhus:* **'bri gung du** gcung rin po che la: na ro chos drug khong rang gi lugs zhus: rin po che bkra shis bla ma (stag lung pa) la khong rang gi lugs kyi 'khrid zhus: chos rje rang byung rdo rje la sku gsum ngo sprod zhus: *slob dpon tshul*

[17.4] *rin la: paṇ chen shakya shri'i lugs 'dzam nag zhus: dge slong dkon mchog skyabs la: rdo rje mkha' 'gro zhus*: rin po che ra lung pa la: ro snyoms skor drug dang: ti phu'i lugs kyi dho ha zhus: rin po che dul drug pa la byams khrid zhus: 'gro mgon

[17.5]'phags pa la dbu ma seṁs skyed zhus: bla ma bzang mo ba la: gsang ldan gyi dbang skur zhus: *slob dpon jo dben pa la: zhi byed sma po skaṁ 3 sgrol ma rnam gsum: rnam 'joms snur lugs rnams zhus: ri pa man lungs pa la: rtan mgrin gyi dug dbang zhus:*

[17.6] *khams pa rdo rje dpal la 'pho ba spyi sdol ma zhus: la drang srong la mtshon dbang zhus:* dgung lo bzhi bcu zhe 3 nas zhe lnga'i bar la: bla ma rin po che mdo khams su bzhugs pa'i shul du gdan sa yang mdzad do// **rin chen grangs med rgya mtsho las byung zhing: bzang po'i spyod tshul khyod kyi rnaṁ thar las: 'bad med lhun gyis grub par 'byung pa'i rngog: rin chen bzang po'i zhabs la phyag 'tshal lo//** bla ma rat na bhadras **rin chen bzang po** ni: *pha* chos thams cad **khu bo**

[17.7] bla ma gzi brjid la tshar bar zhus: *d*gung lo bcu **gnyis** la rtag gnyis gsungs: bcu gnyis nas bcu bzhi bar:[1787] gur: ma hā ma ya: 'jam dpal: sam bhu ṭi la sogs pa rnaṁs gsungs *so*// lha dgu: lha mo bcwo lnga: gdan bzhi: ma ya rnaṁs kyi dbang: na ro me tri 2

[17.8] kyi byin brlabs: chos skyong lcam dral gyi rjes gnang: phyag len gyi bskor: lung man ngag *la sogs pa*[1788] thams cad bla ma **gzi brjid** la zhus shing **thams cad** thugs snyams su chud[1789] par mdzad: *yab la* gur rigs sdus kyi bka': bde mchog mar do lugs kyi bka': dril bu pa'i lus dkyil

[**18.1**] rnaṁs zhus: bla mo bzang mo ba la gsang ldan gyi *dbang* bka' **rnaṁs** zhus: slob dpon rin gzhon la bde mchog mar do'i skor *tshang ba* dang: spar phu *ba'i* lugs gyi chos skor mga' zhig zhus: slob dpon rdo rje rin chen [1790] la: rgyud bla ma: spyod 'jug: slabs sdus: sdom pa nyi shu

[18.2] pa: tshad ma **b**sdus pa rnaṁs zhus: mkhan po zul phu ba la sdoṁ tshig dang: dkon mchog 3 **gyi** rjes dran *dang*: shes rab snying po'i mdo sgrub zhus: slob dpon[1791] 'od zer *dpal* la: sman bla *ba'i* mdo chog: kha che paṇ chen nas brgyud pa'i seṁs skyed yan lag bdun pa

---

[1787] ST1, 17.7: *bcu gnyis dang: bcu bzhi nas:*

[1788] ST2, 43.2: *gyi skor.*

[1789] ST2, 43.2: *gzhes.*

[1790] ST2, 43.4: *rin chen rdo rje.*

[1791] ST2, 43.4: *bla ma.*

he requested the bKa' gdams Stages of the Path. From Master Śākya Seng ge, he requested the Twenty Verses on the [Bodhisattva] Vows. **At 'Bri gung**, he requested from gCung Rinpoche (1210/1-1279/80) his tradition of the six doctrines of Nāropa, and from Rinpoche bKra shis Bla ma (from sTag lung pa), he asked guidance on his own tradition [of the six doctrines]. From the Dharma Lord Rang byung rdo rje (1284-1339), he requested the *Introduction to the Three Bodies. From Master Tshul rin, he received Mahapandita Śākyaśrībhadra's (1127-1225) tradition of Black Jambhala. From the monk dKon mchog skyabs, he requested Vajraḍāka*. From the rinpoche from Ra lung, he requested the *Six Cycles on Equal Taste* and the *Dohas* of Ti phu pa's tradition. From Rinpoche Dul drug pa, he requested the *Guidance on Loving-kindness*. From 'Gro mgon 'phags pa (1235-1280), he requested the *bodhicitta* [vow] according to the Madhyamaka tradition. From Lama bZang mo ba, he requested the empowerment of *Guhyāpanna*. *From Master Jo dBen pa, he received the three traditions of the Pacification of Suffering, those of Rma [Chos-kyi-shes-rab], So[-chung Dge-'dun-'bar] and Kaṃ [Ye-shes-rgyal-mtshan], the three aspects of Tārā, and sNur tradition's of Vajravidāraṇa. From Ri pa Man lungs pa, he requested the poison empowerment of Hayagriva. From Khams pa rDo rje dpal, he requested the Haphazard Transference. From La Drang srong, he requested the weapon empowerment.* From his forty-third to forty-fifth year, he was the seat-holder [of sPre'u zhing] while the Precious Lama [rNgog Rin chen bzang po] was in mDo khams.

[VIII-4. Rin chen bzang po]

> **Born from an ocean of innumerable jewels;**
> **By way of an excellent conduct, from your complete liberation**
> **You appear, rNgog, without effort and spontaneously:**
> **I prostrate to the feet of Excellent Jewel [Rin chen bzang po]!**

Lama Ratnabhadra **Rin chen bzang po** received *all* of his family teachings from **his uncle** Lama gZi brjid. In his 12th year, he taught the *Two Segments*. From his twelfth to fourteenth year, he also taught *Pañjara*, *Mahāmāya*, *Mañjuśrī*, *Saṃpuṭa*, and so on. He requested from Lama **gZi brjid** and integrated within his mind the empowerments of the nine deities, the fifteen deities [of the *Hevajratantra*], *Catuṣpīṭha* and *Māya*, the blessings of Nāro and Maitri, the authorization-empowerment (*rjes gnang*) of the protector in union, cycles of practice, and all reading transmission, key instructions, etc. From his father [rGyal po dga'], he received teachings on the Combined Families of *Pañjāra*, on *Cakrasaṃvara* according to Mar [pa] do [pa]'s tradition and on the body maṇḍalas from Ghaṇṭāpā's [tradition of Cakrasaṃvara]. [18] From Lama bZang mo ba, he received the empowerment and teachings of *Guhyāpanna*. From Master Rin [chen] gzhon [nu], he requested all of Mar [pa] do [pa]'s cycles of *Cakrasaṃvara* and some Dharma cycles of sPar phu ba's tradition. From Master rDo rje rin chen, he requested the *Uttaratantraśāstra*, the *Bodhicāryavatāra*, the *Śikṣāsamuccaya*, the *Twenty Verses on the [Bodhisattva] Vows* and the *Pramāṇa Summary*. From the Upadhyāya Zul phu ba, he requested the formulation of the vows (*sdom tshig*), *Remembering the Three Jewels* and the practice of the *Heart Sūtra*. From Master 'Od zer dpal, he requested the liturgical prayer of the Medicine Buddha and the seven-fold practices to generate [*bodhi*]*citta* from the lineage of the Kashmiri Mahapaṇḍita.

[18.3] rnaṁs zhus: *d*gung lo bcwo brgyad la zul phur rab tu byung pa mdzad: so 3 la bsnyen **par** rdzogs mdzad: so lnga la *(sa mo glang gi lo la:)* mdo**'** khaṁs su byon: de nas dbus gtsang khaṁs 3 thams cad bu slob tu gyur: dus thams cad du chos kyi khor lo brgyun ma chad par skor zhing *smin par mdzad*:

[18.4] bla ma'i mchod pa **dang** dge 'dun kyi sde *dang*: **tsha** tshul bzang po *rnaṁs* btsugs: gsang sngags gyi rgyud sde dang: gzungs dang rig pa: mdo la sogs pa'i bka' bstan chos thams cad ma lus par gser dang dngul gyis glegs bam rgya phrag du bzhengs cing[1792]: dkon mchog

[18.5] mchod pa'i bye phrag **dang**: gtsug **lag** khang gi zhabs **r**tog rnaṁs bsaṁ**s** gyis mi khyab pa mdzad do: sku che ba'i yon tan dang: mdzad tshul[1793] rnaṁs zhib du ni rnaṁ thar na gsal *bar bdog go*// **bla ma chos rgyal ba** *ghu ru dharma dho dzas*: pha chos *rnaṁs* phal cher dang: chos drug rnaṁs bla ma rin po che

[18.6] la thob: bla ma seng ge sgra la gur rigs **b**sdus kyi dbang zhus: 'bri khung du rin po che rdor rin pa la: khong gi lugs gyi khrid *rnaṁs* zhus: yar lungs su lo tstsha ba grags pa rgyal mtshan la rdo rje **'**phreng ba bslabs: *zul bu'i slob dpon*[1794] 'khyaṁs pa la tshad

[18.7] ma gsan: mkhan po rgyal mtshan dpal la kun la btus[1795] dang: spyod 'jug bslabs: dbu mdzad slob dpon mdo sde la 'dul ba dang: **tshad ma** rnaṁ 'grel: *rnaṁ* nges gnyis gsan **cing: zhal gyis kyang bzhes so:** slob dpon bka' bzhi ba la bde mchog dril bu ba'i dbang bka' zhus so// *ghu*

[ST2, 44.2] **slob dpon rin byang la thugs rje chen po'i dmar khrid zhus: gzhan yang slob dpon du ma la: theg pa mtha' dag gi bka' lung rnaṁs zhus pa mangs dogs 'dir ma bris so: bla ma daṁ pa 'di nyid (kyi sku che ba'i yon tan dang: ngo 'tshar che ba bsaṁ gyis mi khyab na'ang: khyag pa dkar por bde mchog gi zhal gzigs lung bstan mdzad do: mdo khaṁs su byon: sems bskyed gsungs pas me tog gi char pa la sogs pa mang ngo) mdo khams smad: dar rtse mdo yan du rngog pa'i bstan pa dar bar mdzad do: da lta'ang chos khri la dus bzang po'i tshe skor ba dang mchod pa byed pa yod skad: grub pa'i brtul zhugs kyi yon tan ni: 'bri khung du dbang mdzad dus: (bsrung 'khor gsal bas:) khang pa'i phyi rol du me dpung 'bar bar mthong pa dang: stag lung du dbang (skur) mdzad dus: yi rtags gdug pa can phyi'i rgya mtsho'i mthar skrad pa la sogs pa'i lo rgyus mang du yod do:**

[18.8] *ru rat na dho dzas: pha chos rnams khu bo dang: yab 2 la sdzogs par zhus cing: khyad par du: gdan bzhi'i dbang dang rgyud sgrub thabs 'pho ba dang bcas pa'i skor thams cad ma lus pa: dud sol gyi skor: gri gug ma: chos drug: ma ya'i sdzogs rims*

[**19.1**] *skor: lam dgu phrugs: 'pho ba spyi brdol ma: sgrol ma'i rigs thams cad ma lus pa: de'i dbang: cho ga dang bcas pa: 'jigs byed kyi skor dbang bka' dang bcas pa: phag mo'i skor: mtshon srungs: dug dbang: bde mchog mar do'i skor:*

[1792] ST2, 43.7: *zhing.*

[1793] ST2, 43.7: *pa.*

[1794] ST2, 44.1: *zur phur bla ma.*

[1795] ST2, 44.1: *kun las bstus.*

He was ordained in his eighteenth year while in Zul phu and received the full ordination in his thirty-third year. In his thirty-fifth year *(in the female earth-ox year)*, he went to mDo khams. After that, he gathered students from all around dBus, gTsang and Khams. At all times, he was uninterruptedly turning the wheel of Dharma *and maturing* [disciples]. He initiated offerings to masters, congregations of the sangha and excellent manners. He commissioned hundreds of volumes [written] in gold and silver of all of the *bKa'* [*'gyur*] and *bsTan* [*'gyur*] without omission, with the tantras of the Secret Mantra, dhāraṇī- and knowledge-[mantras], sūtras and so on. He performed inconceivable offerings to the [three] jewels and service to the temples. The greatness of his qualities and the way he lived are clearly expounded in his detailed hagiography.

[VIII-5. Chos kyi rgyal mtshan]

Lama Chos rgyal ba *Guru Dharmadvaja* obtained most of his forefathers' teachings and the six doctrines from Lama Rinpoche [Rin chen bzang po]. From Lama Seng ge sgra, he requested the empowerments of the Combined Families of *Pañjara*. At 'Bri gung, he requested from Rinpoche rDor rin his own system of guidance. At Yar lung, he studied the *Vajrāvali* with Lo tsā ba Grags pa rgyal mtshan. At Zul phu, he studied *pramāṇa* with a visiting lama, learned the [*Śikṣā*]*samuccaya* and the *Bodhicāryavatāra* with mKhan po rGyal mtshan dpal, studied the *Vinaya*, the ***Pramāṇa****vārtika* and *Viniścaya* with the Chant Leader Master mDo sde, **and he also taught there**. He requested from Master bKa' bzhi pa the empowerment of Ghaṇṭāpā's [tradition] of *Cakrasaṃvara*. [ST2, 44:2] **He requested practical guidance on the Great Compassionate one from Master Rin byang. He requested many other teachings on infinite vehicles from many other masters, but this is not written here by fear of prolixity. This holy master spread the teachings of the rNgog as far as Dar rtse mdo in Eastern Khams. (His great qualities and great wonder are inconceivable: he declared that he had a vision of Cakrasaṃvara in Khyag pa dkar po, and when he gave the bodhisattva vows in Khams, there was a rain of flowers, and so on.) It is said that until now, there are [people] who circumambulate his teaching throne and make offering [in front of it] at auspicious times. As for the qualities of his accomplished yogic discipline, there are many stories: once he was giving an empowerment at 'Bri gung, a bonfire burnt outside of the building when he displayed the circle of protection; once he was giving an empowerment at sTag lung, an evil ghost was expelled to the rim of the outer sea, and so on.**

[VIII-6. Rin chen rgyal mtshan]

Guru Ratnadvaja [Rin chen rgyal mtshan] requested perfectly his forefathers' teachings from his uncle [Rin chen bzang po] and his father [Seng ge sgra]. In particular, he requested from his father all Catuṣpīṭha cycles without exception (the empowerment, the tantra, the sādhanas *together with transference); the cycle of Dud sol [ma]; Gri gug ma; the six doctrines; the cycle of Mahāmāyā's perfection phase; [19] the Ninefold [profound] Path; the Haphazard Transference; all types of Tārā without exception together with their empowerment and sādhanas; the* Vajrabhairava *cycle together with its empowerment;* Vajravārāhī*'s cycle; the protection against weapons; the poison empowerments; Mar [pa] do [pa]'s cycle of* Cakrasaṃvara*;*

[19.2] *byams khrid: phyag chen lnga ldan: dbu ri ba'i thub lnga: rnal 'byor ma kun spyod: he phag sngon 'byung 2: rdo rje mkha' 'gro: zhi byed rnam gsum: phar phyin gcod kyi skor rnams yab la zhus so// chos rje dkar ma pa la rtag gnyis gyi 'grel pa: dus 'khor: 'grel*

[19.3] *pa skor 3: sku 3 ngo sprod: gtum mo'i sdzogs rims: bla ma'i rnal 'byor la sogs pa zhus so// 'brug pa (seng ge rgyal po) rin po che la ro snyoms skor drug: gtum phag gnyis: ye shes mgon gyi skor: lhan 1 skyes sbyor: dho ha: bla ma mchod pa rnams zhus: lha pa la (gzi brjid rgyal po) gsang 'dus kyi*

[19.4] *dbang bka' dang bcas pa: bla ma'i rnal 'byor: sems skyed la sogs zhus: bla ma mkhas btsun pa la rtag gnyis: rigs gter: phar phyin: mgon po gdong bzhi pa la sogs zhus: mkhan po zul phu ba dang: skyor mo lung pa 2 la: 'dul ba: mngon ba: spyod*

[19.5]'*jug rnams zhus: rgya ma pa la: bka' sdams lam rim zhus: mkhan po tshogs chen pa la: sgrol ma: mdo sgrub la sogs pa mang du zhus: gzhan yang bla ma slob dpon mga' la chos dang gdams ngag mang du zhus so//*

[ST2, 44.5] bla ma don grub dpal ba ni:

[44.6] **gung lo drug bdun rtsaṁ nas klog phyed ma brlabs kyang mkhyen gsung: lo bcu gnyis la bla ma rin po che** [chos rgyal][1796] **dang: mkhan chen brtson 'grus dpal ba la dge' tshul mdzad: bcu gnyis nas bco lnga'i bar du: gur rtag gnyis**

[44.7] **ma ya mtshan rjod la sogs pa thugs su tshud cing gsungs: gung lo nyi shu la zul phur: mkhan po byang chub dpal: slob dpon bsod naṁs mgon po: gsang lte ba rin chen dbang phyug la sogs pa: dad pa'i dge slong gi dge 'dun grangs tshang pa'i drung du snyen rdzogs**

[44.8] **mdzad: (de rnaṁs dang lo grags nas rgyud pa'i rdo rje phreng ba'i dbang: rnal 'byor rdzogs 'phreng: sbyin sreg 'od kyi snye ma la sogs pa rdzogs par zhus shing: phyag len yang mang du mdzad do//)**[1797] **<'gro ba ma lus pa smin gyi laṁ la bkod do>:**[1798] **bde ba can pa'i gdan sa pa mkhan chen bkra shis seng pa la sbyor drug zhus: spyan mnga' grags pa byang chub la: phag mo gru'i bka' 'buṁ dang: nyaṁs khrid kyi riṁ pa rnaṁs zhus: slob dpon dkon mchog**

[45.1] pa la: dmar khrid tsheṁ bu lugs: ma 1 lab sgron nas rgyud pa'i spyod kyi skor zhus: bla ma daṁ pa bsod naṁs rgyal mtshan la: dbu ma lugs kyi seṁs bskyed tshar gsuṁ khug pa dbang gi man ngag zhus: 'bri khung rin po che chos kyi rgyal po la: phyag

---

[1796] ST2 has only *bla ma rin po che*. The *dbu med* version of the *Lho rong chos 'byung* has *rin po che pa chos rgyal* and the *dbu chen* version *rin chen chos rgyal*. ST3 has Rin chen chos rgyal. I believe ST3 editors copied on the *dbu chen* version of the *Lho rong chos 'byung*, which has a wrong reading.

[1797] ST3, 89: *bla ma rin po che la rngog lugs kyi: dbang rgyud lung gdams ngag dang bcas pa dang: lo grags nas brgyud pa'i rdo rje phreng ba'i dbang: rnal 'byor rdzogs 'phreng: sbyin sreg 'od kyi snye ma la sogs pa rdzogs par zhus shing phyag len yang mang du mdzad do:* The note in ST2 may be a corrupted copy of this part of ST3.

[1798] This sentence seems to be displaced; there is a similar one opening the part on disciples.

the Guidance on Loving-kindness; the Fivefold Mahāmudrā; the Five Capabilities of dBu ri pa; the Yoginīsañcāra*; two former diffusions of* Hevajra *et [*Vajra*]*vārāhī*;* Vajra*ḍākinī; the three traditions of the Pacification; and the cycles of the Prajñāpāramitā's Cutting. He requested from the Dharma Lord dKar ma pa [Rang byung rdo rje] his commentary on the* Two Segments, Kālacakra*, the threefold cycle of commentaries, the* Introduction to the Three Bodies*, the perfection phase gTum mo, the guru yoga and so on. He requested from the 'Brug pa Rinpoche Seng ge rgyal po (1289-1325) the Six Cycles on Equal Taste, gTum mo and* Vārāhī*, the cycle of wisdom protectors, the Coemergent Union, songs, lama-offerings and so on. In lHa pa, he requested (from gZi brjid rgyal po) the empowerment of the* Guhyasamāja *cycle, the guru yoga, the bodhisattva vows, and so on. From Lama mKhas btsun pa, he requested the* Two Segments*, the* [Tshad ma] rigs gter*, the* pāramitās*, the Four-faced Protector and so on. He requested from both mKhan po Zul phu ba and sKyor mo lung pa the Vinaya, Abhidharma and* Bodhicāryavatāra*. He requested the Stages of the Path of the bKa' gdams pa from rGya ma pa. He requested much from mKhan po Tshogs chen pa, for instance* Tārā, mDo sgrub *and so on. He also requested many teachings and instructions from several other lamas and masters.*

[VIII-7. Don grub dpal]

[ST2:44.5] **It is said that when Lama Don grub dpal ba reached his sixth or seventh year, although he had only partially learned how to read, he knew how to. In his twelfth year, he took the novice ordination from Lama Rinpoche** [Chos rgyal] **and mKhan chen brTson 'grus dpal ba. From his twelfth to fifteenth year, he became proficient in *Pañjāra*, the *Two Segments*, *Mahāmāyā*, *Nāmasamgīti*, and so on. In his twentieth year, he received the complete ordination in Zul phu, in front of the full community of faithful *bhikṣu*s, from the preceptor Byang chub dpal, the assistant bSod nams mgon po, the secret preceptor Rin chen dbang phyug, and others. (From them, he also perfectly received the empowerments of the *Vajrāvali* from ['Khor] lo grags's lineage, the *Niṣpannayogāvali*, the *Jyotirmañjarī* and others, and he practiced a lot). He requested the *Śadanggayoga* from mKhan chen bKras shis seng pa, the seat-holder of dBe ba can. From *sPyan snga* Grags pa byang chub, he requested Phag mo gru [pa']s *Complete Works* and the *Stages of Experiential Instructions* (*nyams khrid kyi rim pa rnams*). From Master dKon mchog [45] pa, he requested the *Essential Instructions [on Avalokiteśvara*] according to Tshem bu's tradition and the cycle on Cutting from the lineage of Ma gcig lab sgron. From Bla ma dam pa bSod nams rgyal mtshan, he received the bodhisattva vows of the Madhyamaka tradition and the *Profound Instructions on the Three Aspects*. From the 'Bri khung Rinpoche Chos kyi rgyal po (1335-1407),**

[45.2] chen lnga ldan: khong gi yab bla ma kun rgyal ba la: tshe dpag med kyi dbang: mkhan chen byang chub dpal la: ’dul ba tshar cig: las slob la sman lha’i lung: gsang lte ba la parna sha ba ri’i skor zhus: slob dpon dkon mchog rdo rje la:

[45.3] mdo’ ba skor gsuṁ: byaṁs chos lnga: bde mchog snyan rgyud kyi dbang bka’ (rdo rje snying ’grel na ro’i ’grel chen gsang ldan rgyud lung:) mdzod las sogs pa mang du gsan no: rtogs ldan rin byang pa la: thub lnga dmar khrid: rgyal po’i mdo lnga: sgrol ma nyi shu rtsa 1: ’dzam nag la sogs pa

[45.4] mang du zhus gsung ngo: rang gzhan gyi rnal ’byor dbang phyug daṁ pa ’di’i yon brtan dang phrin las bsaṁ gyis mi khyab na’ang: de tsaṁ 1 bris so// bla ma sangs rgyas yon tan ni: slab pa gsuṁ gyi spras shing

[45.5] rgyud lung man ngag du ma la: mnga’ mnyes shing dbang ’byor pas: gdul bya smin grol gyi laṁ la bkod nas: slar yang dag pa’i zhing du gshegs so: sku gdung la ’ja ’od kyi gur phub pa dang: ring srel du ma byung zhes thos so//

[19.5] rtag gnyis ’brog *mi’i* ’gyur: gur

[19.6] **saṁ bu ṭi**[1799] *ni* ’gos *khu pa lhas btsas kyi* ’gyur// gdan bzhi**’i rtsa brgyud**[1800] smri ti’i **rang** ’gyur: bshad rgyud chen mo *ni* rje btsun *mar pa’i* ’gyur: de nyid bzhi pa *ni* ’gos *kyi* ’gyur: ma hā ma ya *ni* ’gos *kyi* ’gyur la: klog kya shes rab rtsegs kyis ’*gyur* bcos *pa* gzhan

[19.7] phal cher ’gos ’gyur ro//[1801] **bdan 4’i** dkyil **’khor** cho ga *lo tstsha ba* gzhon nu rgyal mtshan gyi ’gyur: *saṁ bhu ṭi ’gos kyi ’gyur ro// yi ge ris mdzad pa ni:* rje btsun mar pas: dgyes rdor la ’buṁ chung nyi ma dang: yang le’u dang po’i ṭi ka mdzad: **bka’ yang bdag pa’i tshad ma:** gur la

[19.8] srog shing: chos drug gi bka’ dpe *bsre ’pho’i sdom tshig* tshigs su bcad pa brgyad pa: e baṁ gi man ngag: aṣhṭa’i bsrung ’khor: mthu chung phyir *b*zlog: kha sbyor dbye ba: klu sdigs pa: srid pa spel ba: las rgya’i chos bco lnga: ma ya’i

[1799] The sentence “*saṁ bu ṭi ’gos kyi ’gyur ro*” is placed in the end of the section on translations in ST1, 19.7.

[1800] ST1, 19.6: *rnams.*

[1801] In ST2, 45.7, this is the concluding sentence. The translation proposed on the opposite page is according to ST2 that seems more accurate than ST1, especially regarding the *Catuṣpīṭha* cycle.

he requested the Five-fold Mahāmudrā and from his father, Lama Kun rgyal ba, the Amitāyus empowerment. He requested the Vinaya once from mKhan chen Byang chub dpal, the reading transmission of the Deity of Medicine (*sman lha*) from the assistant preceptor, and the *Parṇaśavarī* cycle from gSang lte ba. He listened to many [teachings] from Master dKon mchog rdo rje, such as [Saraha's] *Three Cycles of Dohā*, the *Five Dharmas of Maitreya*, the empowerment permission of the *Cakrasaṃvara* Aural Transmission, (Vajragarbha's commentary, Nāropa's great commentary, the tantra [empowerment] and reading transmission of *gSang ldan*), the [*Abhidharma*]*kośa* and so on. He said that he requested a lot from the Realized one (*rtogs ldan*) Rin byang pa: the essential instructions on the Five Capabilities, the Five Royal Sūtras, the twenty-one Tārās, Black Jambhala and so on. Although the qualities and activity of this holy lord of all yogins are inconceivable, only a few are written here.

[VIII-8. Sangs rgyas yon tan]

[ST2:45.4] **Lama Sangs rgyas yon tan: he was adorned by the three trainings and gained mastery other many tantras, reading transmissions and key instructions. Having established disciples on the path of maturation and liberation, he departed again for the pure fields. [I] heard that on his remains appeared a rainbow tent and many relics.**

[IX. Translations used on the rNgog traditions]

[ST1 19:5] The *Two Segments* was translated by 'Brog-mi. The *Pañjāra* **and the *Saṃputa*** are the translations of 'Gos *Khug pa lhas btsas*. The *Catuṣpīṭha* ***root-tantra*** was translated by Smṛtiśrī[jñāna] **himself**; the *Great Commentary* was translated by the Venerable Mar pa, and the *Fourth Suchness* by 'Gos. *Mahāmāyā* was translated by 'Gos and revised by Klog skya Shes rab rtsegs.[1802] The *maṇḍalapuja* **of Catuṣpīṭha** was translated by *Lo tsā ba* gZhon nu rgyal mtshan. Most other [texts] were translated by 'Gos.

[X. Compositions]

The Venerable Mar pa composed the first chapter of the *'Buṁ chung nyi ma*, a commentary on *Hevajra*. He translated the **bKa' yang bdag pa'i tshad ma**; the *srog shing* of *Pañjara*; the text on the Six Doctrine called the Eight Verses *Summarizing Merging and Transference*; the key-instructions on E baṁ; the protection circle of Aṣhṭa; an exorcism of small magic; the *Kha sbyor dbye ba*; the *Nāga Laughter*; the *Increase of Rebirth*; the *Fifteen Dharmas of Karmamūdra*;

[1802] I choose to translate ST2, which seems preferable than ST1, especially regarding the *Catuṣpīṭha* cycle.

[**20.1**] lhan chung: gdan bzhi'i sgrub thabs: *rgyud chen po*[1803] dang: dud sol: gur mgon rnaṁs gyi 'gyur mdzad do// bla ma chos rdor gyis: rtag gnyis kyi le'u 2 pa man *chad* kyi ṭi ka (**'bum chung nyi ma) mdzad**: dkyil 'khor gyi cho ga mdo sbyar: (mngon rtogs mdo sbyar) mi tri ba'i laṁ dgu phrugs: phyag rgya chen po'i laṁ

[20.2] chig chod: sgom 'buṁ: 'od gsal don bzhi ma: 'pho ba'i gdams pa 3: grong 'jug dang bzhi: yig chung me *l*ce: ma ya'i mtshan bshad: yig sna chung ba: mtshan brjod la rgyud 'grel 2 kyi tig chung *dang*: lhan chung rnaṁs mdzad do// bla ma

[20.3] zhe sdang rdo rjes: rin chen rgyan 'dra: **gur gyi** rnam bshad: **saṁ bu tri'i 'grel pa don gsal sgron me:** gur rtag *gnyis* **ma ya gsuṁ** kyi sa bcad: mtsho skyes kyi ṭi ka: sgrub thabs rnaṁs kyi sa bcad: lha dgu *dang* lha mo bcwo lnga *2* la mngon rtogs rgyas bsdus 2 *2*: dpa' bo cig pa'i mngon rtogs: *dpa' mo cig pa'i mngon rtogs:* gtor

[20.4] ma'i cho ga[1804] dang bdun[1805] *mdzad*: rab gnas *dang*: sbyin *(b)*sreg: tshogs 'khor: spur sbyong: las dang po pa'i bya ba**'i riṁ pa** bcwo lnga: de'i yig sna *dang*: mchod 'buṁ *dang*: gto**r** chog: ma ya'i yig sna: de'i *skor gyi* sa bcad[1806]: *gdan bzhi'i rtsa rgyud: bshad rgyud 2 gyi*

[20.5] *yig sna: gdan bzhi'i skor gyi sa bcad rnams: mngon rtogs: dkyil chog: klu gtor dang: zhing skyong rnams kyi gtor chog: sam bhu ṭi'i don gsal ba'i sgron me: sa bcad: phag mo ra lu[g]s kyi yig sna: sa bcad:* byin brlabs *kyi* cho ga: mngon rtogs:

[20.6]'jaṁ dpal mtshan rjod kyi yig sna: **m**chan: sa bcad: 'grel pa **sngags don rnaṁ gzigs kyi ṭi ka: '**chan: gsang ldan gyi ṭi ka: **'**chan: sa bcad: **de la gzhan pa bdun rnaṁs la yig sna mang du mdzad do:** rtsa ltung bcu bzhi pa dang: bla ma lnga bcu pa'i yig sna: *chan:* sa bcad: *gzhan yang sgrub thabs rnams la yig sna mang du*

[20.7] *mdzad do//* phyag rgya chen po rda bzhi ma'*i* ṭi ka**'i bka' drug**: *'od gsal don bzhi ma'i yig chung: ḍa ki ka drug:* ma hā mu tra'i **tsa** tshig: de'i zhal gdams *che* chung *2*: rim lnga gdan thog cig tu sgoṁ pa: *a thung gi sdom tshig* tshigs su bcad pa 4 bcu zhe

[20.8] dgu pa: lus rang bzhin gyis *grub pa*[1807]: bar do'i zhal gdams *che chung 2*: bar do gong khug ma **su spyod kyi yig sna: sa bcad: gtor chog:** phyag rgya chen po'i *man ngag* snang ba *la* bshur gyis 'debs pa: *dud sol gyi yig sna: sa bcad: gtor chog: las tshogs: rjes snang:* gzhan yang yig chung **mang du mdzad do**//

[1803] ST2, 46.1: *bshad rgyud chen mo.*

[1804] ST2, 46.4: *mngon rtogs.*

[1805] ST2, 46.4: *drug*. ST2 does not mention the *sādhana* on Nairātmyā alone (*dpa' mo cig pa'i mngon rtogs*), hence considers that there are only six creation stage rituals (*mngon rtogs*) related to the *Hevajratantra*, and not seven.

[1806] ST2, 46.5: *spyod.* One full line of ST1 (20.4-5) is missing in ST2.

[1807] ST2, 46.7: *byin gyi slab pa:*

a small compilation on [20] [*Mahā*]*māyā*; a sādhana of *Catuṣpīṭha*; the *Great Commentary*, and some translations of Dud sol ma and Gur mgon.

Lama Chos rdor wrote the commentary on the *Two Segments* (called **'Bum chung nyi ma**) from the second paragraph onwards; the *maṇḍalavidhi* including [quotations] of the Scripture (and the *abhisamaya* including [quotations] of the Scripture); the *Nine Instructions of Maitripa*; the *Unique Path of Mahāmudrā;* the [1478]*Hundred Thousand Meditations*; the *Four points on Luminosity*; three instructions on transference and a fourth on entering another's body; short notes on flames; an explanation on the name of *Māyā*; short *miscellanea*; a small *ṭikka* on the tantra commentary of *Nāmasaṃgīti*, and small compilations.

Lama Zhe sdang rdo rje composed the *Likeness of a Precious Ornament*; an explanation on ***Pañjara***; and **a commentary on *Saṃputa* called *Lamp Clarifying the Meaning***. [He composed] outlines of *Pañjara*, the *Two Segments* and **[*Mahā*]*māyā***; a *ṭikka* on the *Saroruhavajra*-[*sādhana*]; and outlines of *sādhana*s. [He composed] short and long *abhisamaya*s on the nine deities of *Hevajra* and the fifteen deities of *Nairātmyā*, one on Hevajra alone and another on Nairātmyā alone as well as a *gtor ma* ritual: seven in all. [He wrote] miscellanea on [*Mahā*]*māyā*: a consecration; a fire ritual; a *gaṇacakra*; a funeral purification; fifteen **steps** for so-called beginners together with miscellanea; offering- and *gtor ma* rituals; and an outline of the [*Mahāmāyā*] cycle. [He composed] *miscellanea on the root-tantra and explanatory-tantra of* Catuṣpīṭha*, outlines of the* Catuṣpīṭha *cycle, as well as an* abhisamaya*, a* maṇḍalavidhi*,* gtor ma *rituals for nāgas and Zhing skyong. [He composed] the* Lamp Clarifying the Meaning of Saṃputa *and an outline*; *miscellanea on* Vajravārāhī *of R[w]a Lo's Tradition, such as an outline,* a blessing ritual and an *abhisamaya*. *[He wrote]* miscellanea on *Nāmasaṃgīti*, such as notes, an outline, notes and a *ṭikka* on the commentary ***Explanation of the Meaning of the Mantras,*** a *ṭikka*, notes and an outline of *gSang ldan*: **these seven as well as many more miscellanea**. [He wrote] miscellanea, notes and outline on the *Fourteen Downfalls* and the *Fifty [Verses] on Guru-[Devotion]*. *He also composed many miscellanea on the sādhanas*. [He authored] **six pronouncements** on the *ṭikka of* the four symbols of mahāmudrā; miscellanea on the *Four Points on Luminosity*; *the Four Pronouncements of ḍāki[nīs];* root-verses on mahāmudrā and *two* instructions—a short and a long—on that; the one-[pointed] meditation on the five stages; forty-nine verses on *the Concise Summary of A thung*; the accomplishment of the [true] nature of the body; long and short instructions on the intermediate state; **miscellanea, outline and *gtor ma* ritual** on the intermediate state summoning upwards; *key-instructions* on Mahāmudrā that singe appearances. [He authored] *miscellanea, outline,* gtor ma *ritual, activities and authorization of pratice on Dud sol ma*. **He composed many** other small texts.

1478

[**21.1**] **bla ma zhe sdang rdo rje'i sras:** slob dpon[1808] thogs med grags pas: gur rtags gnyis gyi **'**chan: sgrub thabs rnaṁs **(rgya gar ma lnga pa)** *kyi yig sna: sa bcad*[1809]: lha mo bcwo lnga'i mngon rtogs mdo sbyar: **gdan 4 yuṁ bka'i mdo sbyar:** thig gi yig chung: sbyangs ste 'pho ba: thun mong gi be buṁ 3 *mdzad*: thun mong ma yin

[21.2] pa'i be buṁ dang 4 *ni sngar nas kyang yod gsung:* ma h**ā** ma ya'i skor gyi yig sna: gdan bzhi'i rgyud sgrub thabs dang bcas pa rnaṁs kyi yig sna[1810]: **saṁ bu ṭa: gdan 4: ma ya rnaṁs kyi ṭi ka:** rtsa ltung rgya che**r** 'grel *yar lung su* spug rgya gar ra **dz**a *ba* la zhus nas: de'i ṭi **k**ka: **'**chan: sa bcad: saṁ bhu

[21.3] ṭi'i **rgyud kyi ṭi ka yang gsal sgron me:** yig sna: be chon[1811] gyi yig sna rnaṁs mdzad **do**: *gzhan yang yig chung mga' mdzad do//* slob dpon[1812] rgyal tsha ra mos: *ne'u thog tu phya pa'i spyan sngar jo sras bzhi 'tshogs pa la: 'khon bsod nams rtse mo: rngog rgyal tsha: khu ne rtso: smyos*

[21.4] *dpal le dang bzhi'i nang nas thugs rab che ba'i thog chod: phar tshad dang sgrogs gleng la sogs mkhas par slabs nas mkhyen ste: 'on kyang yig cha chen po ma mdzad par:* gtam yig khra[1813] mo che chung **2** *dang*: ja rabs la sogs pa yig **sna che** chung *'ga' re*[1814] mdzad do//

[21.5] slob dpon[1815] rgyal tsha rdor seng gis: lha dgu: lha mo bcwo lnga **dang**: ma h**ā** ma ya 3 kyi dkyil 'khor **gyi** cho ga: mngon rtogs dang **'g**rel pa 3 mdzad: lha mo bcwo lnga'i byin brlabs kyi cho ga rnaṁs mdzad do// bla ma kun dgas rtag gnyis kyi dmar chan *rnams* mdzad *do*//

[21.6] slob dpon seng ge sgra yis gdan bzhi'i dkyil **'khor** chog **ga**: bstan chos nyi ma'i 'od zer: rnaṁ thar rin chen phreng ba: rnaṁs mdzad **do**// bla ma rin chen bzang pos[1816]: rigs sdus kyi dkyil 'khor gyi cho ga: mngon rtogs: *dbang gi tho yig: ma ya'i mngon rtogs:* gsang ldan gyi mngon

[21.7] rtogs: *b*rgyun gtor cha lnga: rnaṁ thar rim pa bzhi pa: **gsang ldan gyi dkyil chog** rnaṁs mdzad do// bla ma *dharma ke dus* **chos rgyal bas**: rtag 2 kyi zin bris chen mo: 'jam dpal[1817] gyi gdon thabs: tshogs 'khor rnams mdzad *do*// slob dpon[1818] *ratna ra dzas* **rin chen rgyal pos**: rdo rje phreng pa'i nang *gi* thig dang: dbang gong ma

[21.8] mdzad *do*// slob dpon[1819] *ratna shris* **rin chen dpal gyis**: rtag gnyis kyi ṭi ka: kyai[1820] rdo rje'i **mngon rtogs:** sbyin bsreg: rab gnas: dkyil 'khor blos byong: bla ma'i rnam thar rnaṁs mdzad do// de rnaṁs ni yi ge ris[1821] mdzad pa'i rim pa'o// //bla ma mar pa bya lo ba dgung lo brgyad bcu rtsa dgu bzhugs:

[1808] ST2, 46.8: *bla ma.*
[1809] ST2, 46.8: *kyi ṭi kka.*
[1810] ST2, 47.1: *'grel pa.*
[1811] ST2, 47.2: *be btson.*
[1812] ST2, 47.2: *bla ma.*
[1813] ST1, 21.4: *khya.*
[1814] ST2, 47.2: *mang du.*
[1815] ST2, 47.3: *bla ma.*
[1816] ST2, 47.4: *gu ru ratṇa bha tras:*
[1817] ST2, 47.5: *mtshan.*
[1818] ST2, 47.5: *bla ma*
[1819] ST2, 47.6: *bla ma*
[1820] ST2, 47.6: *kye'i.*
[1821] ST2, 47.6: *rigs.*

[**21**] **The son of Lama mDo sde,** master Thogs med grags pa composed notes on *Pañjara* and on the *Two Segments*; miscellanea and outlines of **(the five Indian)** *sādhana*s; an *abhisamaya* on the fifteen deities with [quotations] of the scripture; **one on the female [form of] *Catuṣpīṭha* alone with [quotations] of the scripture**. He authored a small text on lines; three ordinary scriptures on purification and transference and a fourth extraordinary one, *that are said to still exist*. [He composed] miscellanea on the *Mahāmāyā* cycle, miscellanea on the *Catuṣpīṭhatantra* together with *sādhana*s; ***ṭika*s on *Saṃputa, Catuṣpīṭha,* and *Mahāmāyā***. Having received the *Large Commentary on Root Downfalls* from sPug rgya gar ra **dz**a *in Yar lung*, [he wrote] a ṭikka, notes and and an outline.

He authored **the *Further Clarifying Lamp* on the** *Saṃputa**tantra;*** various miscellanea and some on Be con. *He also authored other small texts.*

***In [gSang phu] gNe'u thog,* master rGyal tsha Ra mo *was in a group of four sons of noble families [who studied] with Phya pa. There was bSod nams rtse mo of the 'Khon, rGyal tsha [Ra mo] of the rNgog, Ne rtso of the Khu, and dPal le of the sMyos. Among them, he excelled in higher knowledge. Although he learned to proficiency [teachings] on the [Prajñā]pāramitā, pramāṇa, debate, and so on,* he did not compose important manuals, but only writings of** various **length, *ja rabs,* etc.**

Master rGyal tsha rDor seng composed the maṇḍala rituals for [Hevajra] nine-deity, [Nairātmyā] fifteen-deity and *Mahāmāyā*, together with three generation-phase *sādhana*s and commentaries. He composed the ritual of blessing of the fifteen deities. Bla ma Kun dga' composed red notes on the *Two Segments*.

Master Seng ge sgra composed a maṇḍala ritual of *Catuṣpīṭha*, the treatise *Sunlight Rays*, and the biographies *Rosary of Jewels*.

Lama Rin chen bzang po composed a maṇḍala-ritual for the Combined Families [*Pañjara*], as well as an *abhisamaya* and notes on the empowerment; an *abhisamaya* for *Mahāmāyā* and one for *gSang ldan* as well as the Five-fold Continuous gTor ma, the *Hagiography in Four Stages*, **and a maṇḍala ritual for *gSang ldan***.

Lama *Dharmaketu* **Chos rgyal ba** compiled extensive notes on the *Two Segments*, a recitation method for *Mañjuśrī**nāmasaṃgīti*** and some *gaṇacakra* [rituals].

Master Ratnarāja **Rin chen rgyal po** composed the inner lines and an empowerment of *Vajravāli*.

Lama *Ratnaśrī* **Rin chen dpal** composed a commentary on the *Two Segments*, an *abhisamaya* of Hevajra, a fire ritual, a consecration ritual, a mind-training of the maṇḍala, and biographies of the lamas. The above are the compositions of [the rNgog masters].

[XI. Date of birth and age at death]

Lama Mar pa was of a bird year and lived to his eighty-ninth year.

[**22.1**] bla ma chos rdor phag lo ba drug bcu rtsa brgyad bzhugs: bla ma mdo sde rta lo ba bdun bcu rtsa bdun bzhugs: sras drug la[1822]: bla ma'i gong du: jo bde[1823] yos lo ba bcu gcig la 'das[1824]: ston chung dbang mo glang lo ba bcu gsuṁ lon ba cig dang: jo bsod

[22.2] bya lo ba bcu bdun lon pa 2: 'phrang po lte ba khung du gser ('bum) 'bri[1825] ba'i dus *su* sbos chu la gru bying nas grongs: slob dpon jo 'od stag lo ba nyi shu rtsa lnga bzhugs: slob dpon jo thog byi ba lo pa suṁ cu rtsa bdun bzhugs: slob dpon jo tshul lug lo *ba* bzhi

[22.3] bcu rtsa bzhi bzhugs: sras rnaṁs chung *shos nas bas*[1826] rims kyi*s* grongs: ston chung dbang mo de lo bcu gsuṁ las *lon*[1827] kyang: chos phal cher shes pa cig byung bas: *bla ma la thugs khral cher byung nas:* jo mo sgre mo *bya ba* de la mi thams cad kyi*s*

[22.4] gar skye*d* 'dri ba cig 'dug pas: bla mas *kyang* gtsang du mi btang nas gar skye dris pas: sang phod[1828] khyed rang gi dbon por 'khrungs pa*r* 'dug gi gsung: sang phod de: bla ma nya mo gyur na bzhugs pa'i dus na: jo ra 'khrungs zer ba gsan nas:

[22.5] dger[1829] tshor chen po mdzad gsung ngo: slob dpon jo ra de nyid kyang chos ma slabs par shes pa'i grags pa'*ang* byung gsung ngo// dbon po 3 la: slob dpon rgyal tsha ra mo lo nyi shu rtsa cig: slob dpon rdor seng lo bcwo lnga: slob dpon kun dga' lo bcu[1830] lon tsa na: bla ma

[22.6] chen po gshegs so// *der dbon po 3 gyis rje btsun mar pa dang: bla ma mdo sde'i gdung khang chen mo bzhengs so//* ghu ru a nanta badzras **slob dpon kun dga'**: glang lo ba bdun bcu rtsa brgyad bzhugs: slob dpon rat na ra dza **rin chen rgyal po (rgyal tsha rgyud)** glang lo ba drug bcu rtsa brgyad bzhugs: ghu ru

[22.7] te dzo kirti **bla ma gzi brjid** khyi lo ba brgyad bcu thaṁ[1831] pa bzhugs: slob dpon ra dza a nanta **rgyal po dga'** glang lo ba bgyad bcu tham pa bzhugs: ghu ru sing ha na da **slob dpon seng ge sgra** lug lo ba bdun bcu rtsa bzhi bzhugs:[1832] **bla ma rin chen bzang po yos lo pa bdun bcu rtsa bdun bzhugs:**

[22.8] slob dpon dharma badzra **chos rdor** rta lo ba drug bcu rtsa drug bzhugs: ghu ru dharma dhwa dza **bla ma chos rgyal la** lug lo ba bdun bcu rtsa **bdun**[1833] bzhugs so// *ghu ru ratna dhwa dzas lug lo ba lnga bcu rtsa drug bzhugs:* **slob dpon seng ge 'buṁ yos lo pa rgya bcu rtsa 4 bzhugs:** slob dpon sangs rgyas[1834] grags phag lo ba lnga bcu rtsa dgu bzhugs: *slob dpon sangs rgyas seng ge sbrul*

[1822] ST2, 47.7: *ni.*

[1823] ST2, 47.7: *jo sde.*

[1824] ST2, 47.7: *gshegs.*

[1825] ST2, 47.8: *bris.*

[1826] ST2, 48.1: *pa nas mas.*

[1827] ST2, 48.1: *mi bzhes.*

[1828] ST2, 48.2: *sang bod (et passim).*

[1829] ST2, 48.2: *dgyes.*

[1830] ST2, 48.4 says *bcu gsuṁ* instead of *bcu*, but this is mistaken as Kun dga' rdo rje is nine years younger than Ra mo.

[1831] ST2, 48.4: *thaṁs (et passim).*

[1832] ST1, 22.7: *slob dpon sangs rgyas grags phag lo ba lnga bcu rtsa dgu bzhugs: slob dpon sangs rgyas seng ge*. At this point a scribal error is inserted and should be read at the second occurrence, on line 22.8.

[1833] ST1, 22.8 has *dgu*.

[1834] ST2, 48.6: *seng ge grags*.

[22] Lama Chos rdor was of a pig year and lived to his sixty-eighth year. Lama mDo sde was of a horse year and lived to his seventy-seventh year. He had six children, who died before the lama, in a succession from the youngest: Jo bDe was of a hare year and died in his eleventh. sTon chung dbang mo was of an ox year and reached her thirteenth; Jo bSod was of a bird year and reached his seventeenth: both died when their ship sinked in a swollen river [when going to] lTe ba gung, in ’Phrang po, in order to write in gold [a *Prajñāpāramitā*] *in 100.000* [*verses*]. Master Jo ’Od was of a tiger year and lived to his twenty-fifth. Master Jo Thog was of a rat year and lived to his thirty-seventh. Master Jo Tshul was of a sheep year

and lived to his forty-fourth. Although sTon chung dbang mo did not live beyond thirteen, she knew most of the Dharma, *and so it caused much grief to the lama*. As everyone was asking Jo mo sgren mo where people were reborn, the lama *too* sent someone to gTsang to ask her where [his daughter] would take birth. She replied that she would be reborn as his grandson in the following year. The following year, while the lama was staying in Nya mo kyur, it is said that he felt a great surge of joy when he heard that Jo ra was born. It is said that master Jo ra himself became famous for knowing the dharma without having to learn it.

The great Lama died when his three grand-sons, Master rGyal tsha Ra mo, Master rDor seng and Master Kun dga’ were respectively in their twenty-first, fifteenth and tenth year. *Then, the three nephews built a great reliquary for the Venerable Mar pa and for lama mDo sde.*

Guru Ānandavajra (**Master Kun dga’**) was of an ox year and lived to his seventy-eighth. Master Ratnarāja **Rin chen rgyal po (of the rGyal tsha line)** was of an ox year and lived to his sixty-eighth. Guru Tejaḥkīrti **Lama gZi brjid** was of a dog year and lived to his eightieth. Master Rājānanda **rGyal po dga’** was of an ox year and lived to his eightieth. Guru Siṃhanāda **Master Seng ge sgra** was of a sheep year and lived to his seventy-fourth. **Lama Rin chen bzang po was of a hare year and lived to his seventy-seventh.** Master Dharmavajra **(Chos rdor)** was of a horse year and lived to his sixty-sixth. Guru Dharmadvaja **(Lama Chos rgyal ba)** was of a sheep year and lived to his seventy-ninth. *Guru Ratnadvaja was of a sheep year and lived to his fifty-sixth.* **Master Seng ge ’bum was of a hare year and lived to his eighty-fourth.** Master Sangs rgyas grags was of a pig year and lived to his fifty-ninth. Master Sangs rgyas sengge was of a snake

[**23.1**] *lo ba lnga bcu bzhugs//* **bla ma don grub dpal lug lo pa drug bcu rtsa rgyad bzhugs: bla ma sang yon pa sbrul lo pa drug bcu rtsa bzhi bzhugs// rgyal tsha** rgyud *pa 2 pa*[1835]: *slob dpon* rgyal tsha ra mo stag lo ba suṁ bcu rtsa bdun bzhugs: rgyal tsha rdor seng spre'u lo ba drug **b**cu rtsa brgyad bzhugs: *slob dpon lcam me khyi lo ba bdun bcu rtsa 3 bzhugs: slob dpon dzo shag phag lo ba*

[23.2] *lnga bcu bzhugs: slob dpon jo bsod stag lo ba drug bcu dgu bzhugs: slob dpon nam mkha' dbang phyug byi ba lo drug bcu cig bzhugs: slob dpon kun dga' khyi lo ba zhe dgu bzhugs: slob dpon dbang phyug 'bum byi ba lo pa nyi shu rtsa bdun bzhugs: slob dpon radna ra tsa sprel lo ba drug bcu*

[23.3] *1 bzhugs: slob dpon grags pa rgyal mtshan 'brug lo ba sum bcu so 3 bzhugs: slob dpon kun blo lug lo ba rtsa dgu bzhugs:* de rnams **mi rgyud sboṁ rags kyi** ni sku tshe 'di bzhugs kyi rim pa'o// rje btsun mar pa la: thugs kyi sras chen po bzhi yod pa[1836] las: gzhung gi rngog ston chos rdor:

[23.4] dol gyi 'tshur[1837] ston dbang nge: gtsang rong gi mes ston tshon po: gung thang gi mi*d* la ras pa dang bzhi yod pa las: gzhung gi rngog ston *chos rdor* la: dbang rgyud man[1838] ngag dang bcas pa'i bka' babs pa yin gsung: khyad par du jo bo na ro pa'i gsung nas: khyod

[23.5] kyi *b*gryud pa bdun tshun chad du: byin gyi brlob[1839] pa la nga rang gis 'ong ba yin gsung nas lung **b**stan mdzad par gda'[1840]// rje btsun mi*d* la *(spyan mnga' thod sgal ba dang lnga'ang zer ro:)* ram rtsan can: rdog mun pa can: spa lba ba can: sum pa phod kha[1841] can: de rnaṁs *ni* bla ma chos rdor gyi slob ma bu chen **yin**:

[23.6] rtsags dar ma rgyal mo[1842]: sngo tsha chos sku: 'gar[1843] ston bkra shis dbang phyug: 'tshur dung[1844] bu kha pa: rma bya ba chen po: bla ma lho nag pa: ngos rje kun dga' 'od: bya[1845] nag chen po: sna ri khyung po: *go ne snying po grags:* dkar ston chos 'od: mal

[23.7] nag pa do pa chos tshul: nal 'bum seng: ra rdo rje grags *pa*: mal yer pa ba: bla ma b**he** ro ba: rba snyi ba'i jo sras: de rnaṁs *ni bla ma*[1846] mdo sde'i slob ma bu chen yin no// de la sogs pa'*i slob ma* sngags gyi **slob ma** dge ba'i bshes snyen gdugs thogs dung 'bud pa: 'gro ba rnaṁs la phan thogs pa *rang* suṁ *b*rgya

[23.8] dang drug bcu rtsa 1 byung *gsung* ngo// rgya pho ba lung ba: bka' lung snyan sgoṁ: mnga' ris pa byang tshul: rtsags yon tan seng ge: rtog jo sras nyi ma rnaṁs: bla ma rgyal tsha ra mo'i bu chen yin no// dran ston mtha' bral: rngo tsha dkon mchog dpal **grags pa dpal** *sku mched* 2: bla ma la drug pa: bla ma rtag[1847]

[1835] ST2, 48.7: *'og ma'i.*

[1836] ST2, 48.8: *mnga' ba.*

[1837] ST2, 48.8: *mtshur.*

[1838] ST2, 49.1: *gdaṁ.*

[1839] ST2, 49.2: *brlab.*

[1840] ST2, 49.2: *gnang.*

[1841] ST2, 49.2: *dka'.*

[1842] ST2, 49.3: *po.*

[1843] ST2, 49.3: *mgar.*

[1844] ST2, 49.3: *duṁ.*

[1845] ST2, 49.3: *ja.*

[1846] ST2, 49.4 has *mar pa mdo sde* instead of *bla ma mdo sde* in ST1. This ressembles a slip of the scribe's pen.

[1847] ST2, 49.6: *stag.*

[23] year and lived to his fiftieth. **Lama Don grub dpal was a of sheep year and lived to his sixty-eighth. Lama Sang yon pa was of a snake year and lived to his sixty-fourth.**

The second, **rGyal tsha** branch: *Master* rGyal tsha Ra mo was of a tiger year and lived to his thirty-seventh. rGyal tsha rDor seng was of a monkey year and lived to his sixty-eighth. *Master lCam me was of a dog year and lived to his seventy-third. Master Jo Shak was of a pig year and lived to his fiftieth. Master Jo bsod was of a tiger year and lived to his sixty-ninth. Master Nam mkha' dbang phyug was of a rat year and lived to his sixty-first. Master Kun dga' was of a dog year and lived to his forty-ninth. Master dBang phyug 'bum was of a rat year and lived to his twenty-seventh. Master Ratnarāja [Rin chen rgyal po] was of a monkey year and lived to his sixty-first.*

Master Grags pa rgyal mtshan was of a dragon year and lived to his thirty-third. Master Kun blo was of a sheep year and lived to his twenty-ninth.

These was a successive [presentation] of the lifespan of **the**[1848] **human line.**

[XII] Disciples

The Venerable Mar pa had four great heart-sons: rNgog ston Chos rdor from gZhung, 'Tshur ston dBang nge from Dol, Mes ston tshon po from gTsang rong and Mid la ras pa from Gung thang. [Mar pa] made [a few] declarations to rNgog ston chos rdor from gZhung. He told him that he was his successor for the empowerments, tantras and key-instructions. He added that in particular, Lord Nāropa had declared that he would come in person to bless [Chos rdor's] lineage during seven generations. The following are the great disciples of Lama Chos rdor: Ram rTshan can, rDog Mun pa can, sPa lba ba can, Sum pa Phod kha can, (*to which sPyan mnga' Thod sgal ba added a fifth:*) the Venerable Mid la.

The great disciples of lama mDo sde are the following: rTsags Dar ma rgyal mo, sNgo tsha Chos sku, 'Gar ston bKra shis dbang phyug, 'Tshur dung bu kha pa, rMa bya ba chen po, Bla ma Lho nag pa, Ngos rje Kun dga' 'od, Bya nag chen po, sNa ri khyung po, Go ne sNying po grags, dKar ston Chos 'od, Mal nag pa do pa chos tshul, Nal 'buṁ seng, Ra rdDo rje grags pa, Mal yer pa ba, Bla ma Be ro ba, rBa snyi ba'i jo sras. It is said that he had these, and others: 361 disciples who were spiritual friends in the mantra[yāna], holders of the parasol, blowers of the conch and actors of the benefit of beings.

The great disciples of rGyal tsha Ra mo were rGya Pho ba lung ba, bKa' lung snyan sgom, mNga' ris pa Byang tshul, rTsags Yon tan sengge and rDog jo sras Nyi ma.

The disciples of Master rGyal tsha rDor seng were Dran ston mtha' bral, the *brothers* rNgo tsha dKon mchog dpal and **Grags pa dpal**, Bla ma La drug pa and Bla ma [24] rTag chen pa.

[1848] At this point, ST2 adds *sbom rags*, "roughly" probably to indicate that it left out most rGyal tsha family members.

[**24.1**] chen pa rnaṁs slob dpon[1849] rgyal tsha rdor seng gi slob ma **bu chen** yin no// rta rna *dang*: shor dgon: ri[1850] bo che las sogs pa mdo khams stod smad thams cad: bla ma kun dga'i slob mar gda'o// ghu ru rad na bha tras **bla ma rin chen bzang pos**: dbus gtsang khaṁs 3 thams cad: rngog pa'i bstan ba nam langs pa la nyi ma shar ba ltar

[24.2] *du* dar zhing rgyas par mdzad do// ghu ru dharma dhwa dzas **bla ma chos rgyal bas**: phyogs thams cad du: bu slob 'phel bar mdzad do[1851]// *ghu ru rad na dhwa dzas dbus dang mdo khams kyi bdul bya snod ldan thams cad smin cing grol bar mdzad do*[1852]// [ST2, 50.1] **bla ma don grub dpal bzang pos: gdul bya du ma yang smin grol la bkod cing: khyad par chos sgo ba chos dpal shes rab: rta rna rin po che blo gros pa: shakya rgyal mtshan: rnal 'byor gyi dbang phyug a hung badzra: rtogs ldan sangs rgyas 'byung gnas: kun mkhyen yog pa 'gu ru la sogs pa dge ba'i gshes snyen thos bas gyi gangs ri la: nyaṁs rtogs kyi 'od zer rgya las gsal ba'i skyes bu mang du byon no:** de rnams ni bu slob kyi gdul bya'i rim pa lags so// //bka' rgyud dri ma med

[24.3] pa'i[1853]// rnam thar dri med *phreng* pa 'di// mos gus dri ma med pas **b**tsams// *sa bcu dri med sgrod*[1854] par shog// snyan ngag sdeb**s** legs mi shes kyang// rang bzo phyogs l*h*ung med[1855] pa 'di// mos pa'i dpal du 'gyur bsaṁs nas// dam tshig

[24.4] can kyi rdo rjes sbyar[1856]// *bla ma rnams kyi rnam par thar pa rin po che'i rgyan gyi phreng ba zhes bya ba: legs par rdzogs so// gangs ri ltar rgyud rnam dag rin po che'i// thar pa'i ri bo mchog la su mos pa// log lta*

[24.5] *spangs shing dad pa'i skyes bu rnams// dri med rin chen phreng ba brgyud par shog// maṅ gha lam bha wa stu// (lan du zhu: lcags pho byi ba'i lo la sbyar ro: stag gi lo la rngog rin po che byang chub dpal la rngog lugs kyi chos skor rnams bdag punya shris zhus pa'i dus su bris:*

[ST2, 50.4] **bla ma daṅ pa rnaṁs kyi rnaṅ thar pa// nor bu'i phreng pa zhes bya ba// sngags 'chang dpal gyi rdo rjes bsgrigs pa las// bcung zad phri mnan dang bcas pa// rngog ston**

[50.5] **rim gnyis kyi rnal 'byor pa bho ti shris yi ger bkod pa'o// gangs ri'i ltar rgyud rnam dag rin po che// thar pa'i ri bo mchog la su mos pa// log lta spangs shing dad pa'i skyes bu rnams// dri med nor bu'i phreng pa rgyud**

[50.6] **par shog// shu bhaṅ// (lan cig zhu)**

[1849] ST2, 49.6: *bla ma.*

[1850] ST1, 24.1: *re.*

[1851] ST2, 49.8: *cing.*

[1852] ST2, 49.8: *khyad par mdo khaṁs kyi thil yan chad du: bstan pa gsal bar mdzad do:*

[1853] ST2, 50.3: *pa yi.*

[1854] ST2, 50.3: *dge ba dri med thob.*

[1855] ST2, 50.3: *bral.*

[1856] ST2, 50.4: *dkod.*

The disciples of Lama Kun dga' came from the whole of A mdo and Khams, such as [the monasteries of] rTa rna, Shor dgon, Re bo che, and others.

Guru Ratnabhadra (**Lama Rin chen bzang po**) made the teachings of the rNgogs spread everywhere in dBus, gTsang and Khams, like the sun rising at dawn.Guru Dharmadvaja (**Lama Chos rgyal ba**) made disciples increase in all directions. *Guru Ratnadvaja (Rin chen rgyal mtshan) brought to maturation and liberation all the worthy trainees in dBus and mDo khams*.

[50] Lama Don grub dpal bzang po led many disciples [on the paths of] maturation and liberation. In particular, there came many individuals who were illuminated by the hundred light rays of his experience and realization, such as Chos sGo ba Chos dpal shes rab, rTa rna Rinpoche Blo gros rgyal mtshan, Shākya rgyal mtshan, the powerful yogi Ā Hūm Vajra, rTogs ldan Sangs rgyas 'byung gnas, the Omniscient Yog pa gu ru and others.

This was an enumeration of their respective disciples.

[XIII] Colophon

This *rosary* of immaculate hagiographies
Of the immaculate bKa' brgyud
Was composed with an immaculate devotion.
May the immaculate ten stages be trod! **May the immaculate virtue be obtained!**
Lacking in the knowledge of well-written poetry
This is without the pitfall of self-creation:
With the thought of developing the excellence of aspiration
This was compiled by rDo rje endowed with samayas.

[ST1, 24.4] *The hagiographies of the lamas, called a Rosary of Precious Ornaments, are complete.*

May those who aspire to the supreme mount of liberation –
The pure and precious tantras, which are like a snow mountain –
May the individuals who abandoned wrong views and have faith
Receive this rosary of immaculate jewels!

(Corrected once) (This was compiled in the male iron rat year. I, Punyaśrī, wrote this in the tiger year, while I was receiving the cycle of teachings of the rNgog tradition from rNgog Rin po che Byang chub dpal.)

[ST2, 50.4] **These hagiographies of the holy lamas, called *Rosary of Jewels*, was arranged by the secret mantra holder dPal gyi rdo rje. With a few additions and substractions, I, the yogi of the two branches of rNgog teachers, Bodhiśrī, put this to writing.**

May those who aspire to the supreme mount of liberation—
The pure and precious tantras, which are like a snow mountain—
May the individuals who abandoned wrong views and have faith
Receive this rosary of immaculate jewels!

Appendix 2: Summarizing chart

Tibetan name (ST2, ST3)	Sanskrit name (ST1) & variation	Title in ST1	Title in ST2/ST3	wife's name (ST1)	wife's name (ST3)	birth-year	age †	*lHo rong*	*Deb sngon*
Mar pa		rje btsun	rje btsun			bird	89		
Chos kyi rdo rje Chos rdor	Dharmavajra	bla ma	bla ma	dPa' mo chos mo	dPa' mo chos mo	pig	68	1023-1090	1036-1102
mDo sde	Sūtrantā, Yi dam seng ge	bla ma	bla ma	Jo skyabs	Tshul skyid	horse	77	1078-1154	1090-1166
Jo tshul/ Tshul khrims shes rab		slob dpon	slob dpon	'phrang po lha cig 'buṃ rgyan	lHa cig 'bum rgyan phrang po ba	rat	37	1108-1144	1120-1156
Jo thog / Thogs med grags	Asaṅgakīrti	slob dpon	slob dpon			sheep	44	1103-1146	1115-1158
Jo bde						bird	17	1117-1133	nd
sTon chung dbang mo						tiger	25	nd	1122-1146
Jo bsod						hare	11	1123-1133	1135-1145
Jo bde 'od						ox	13	1121-1133	1133-1145
Kun dga' rdo rje	Ānandavajra	bla ma	bla ma			ox	78	1145-1222	1157-1234
Rin chen rgyal po	Ratnarāja	slob dpon (dge slong)	slob dpon			ox	68	1181-1248	nd
gZi brjid grags pa	Tejaḥkīrti	bla ma (btsun pa)	bla ma			dog	80	1190-1269	1202-1281
rGyal po dga'	Rājānanda	slob dpon (sngags pa)				ox	80	1193-1272	1205-1284
Seng ge sgra	Siṃhanāda	slob dpon	slob dpon			sheep	74	1211-1284	1235-1308
Rin chen bzang po		bla ma	bla ma			sheep	77	1231-1307	1243-1319
Chos kyi rdo rje	Chos rdor/ Dharmavajra	slob dpon	slob dpon			horse	66	1246-1311	1246-1311
Chos kyi rgyal mtshan	Dharmadvaja	bla ma	bla ma			sheep	79 ST2: 77	1283-1359	1283-1359
Sangs rgyas grags	Seng ge grags pa	slob dpon	slob dpon			pig	59		
Sangs rgyas seng ge		slob dpon	slob dpon			monkey	50		
Seng ge 'bum		slob dpon	slob dpon			hare	81	1303-1383	nd
Khrom rgyal ba/po		slob dpon	slob dpon			pig	59		
Rin chen rgyal mtshan	Ratnadvaja	bla ma	Ø			sheep	56		
Blo gros seng		slob dpon	Ø						

Tibetan name (ST2, ST3)	Sanskrit name (ST1) & variation	Title in ST1	Title in ST2/ST3	wife's name (ST1)	wife's name (ST3)	birth-year	age †	*lHo rong*	*Deb sngon*
bSod nams rin chen		slob dpon	Ø						
Nam mkha' rgyal mtshan		slob dpon	Ø						
rDo rje rgyal mtshan			Ø						
bSod nams bzang po			Ø						
Don grub dpal		slob dpon	bla ma			sheep	68	1319-1386	1331-1398
Don grub bzang po									
Legs pa dpal		Ø	slob dpon						
Sang yon pa	Sangs rgyas yon tan	slob dpon	bla ma			snake	64		
Sang rin	Sangs rin		slob dpon						
Rin chen dpal bzang po		Ø	bla ma						
mGon po		Ø	slob dpon						
Ra mo		slob dpon	slob dpon	Shi sha dur ma	Shi sha dar ya	tiger	37	1134-1170	1146-1182
rDo rje seng ge		slob dpon	slob dpon			monkey	68	1140-1207	1152-1219
lCam me		slob dpon	slob dpon	dPal 'bum	dPal 'bum	dog	73		
Jo shak						pig	50		
Jo bsod				mKhos mchog		tiger	69		
Dor rgyal (son of Jo shak)		slob dpon	Ø		mKho chog ya kha ba	rat	61		
'Bum lcam (son of Jo bsod)			Ø						
Nam mkha' dbang phyug		slob dpon	slob dpon						
Kun dga’		slob dpon	bla ma	dGa' sham mo	dGa' sham Yar lungs pa	dog	49		
dBang phyug ’bum			slob dpon			rat	27		
Rin chen rgyal po	Ratnarāja	slob dpon	slob dpon	'Dran brgyan	'Dren rgyal	monkey	61		
Rin chen dpal	Ratnaśrī	slob dpon	bla ma						
Grags pa rgyal mtshan		slob dpon	slob dpon			dragon	33		
Kun dga’ blo gros		slob dpon	slob dpon		dPal ldan 'bum	sheep	69		
Kun dga' bzang po			bla ma						
Byang chub dpal		Ø	bla ma					1360-1446	1360-1446

Tibetan name (ST2, ST3)	Sanskrit name (ST1) & variation	Title in ST1	Title in ST2/ST3	wife's name (ST1)	wife's name (ST3)	birth-year	age †	*lHo rong*	*Deb sngon*
Rin chen rdo rje		Ø	dbon po						
bKra shis dpal grub		Ø	rin po che						
Byang chub dpal grub		Ø							
Ras pa		Ø	bla ma						
dPal 'byor pa		Ø	bla ma						
dKon mchog bkra shis		Ø	mkhan chen						
dPal ldan bzang po		Ø	slob dpon						
bSod nams don grub pa		Ø	chos rje						
lHa dbang bzang po		Ø	slob dpon						
rDo rje bkra shis		Ø	slob dpon						
Rin chen dbang phyug		Ø	slob dpon						
bSod nams dpal dbyangs		Ø	bla ma						

Appendix 3: Titles in NKSB, with correspondences in other editions

Author in NKSB	Alternative author	Title	NKSB	NKCK	DC	DK-DZO	KGND	Remarks
bSod nams dpal		rngog pa yab sras rim par byon pa'i rnam thar rin po che'i rgyan gyi phreng ba	1: 1		016990			LGNT, 22:1-24
rNgog Byang chub dpal		rJe mar pa nas brgyud pa'i rngog gzhung pa yab sras kyi bla ma'i rnam thar nor bu'i phreng ba	1: 35		017030			LGNT, 22:25-50
		rje btsun mar rngog bka' brgyud kyi mdzad rnam mdor bsdus	1: 69		017623		ˆ	
rNgog Chos rdor?		bla ma mar pa lo tsa'i rnam par thar pa	1: 91		017696			
rNgog Chos rdor	Mar pa / Chos rdor	dpal brtag pa gnyis pa'i 'grel pa 'bum chung nyi ma	1: 118	1: 50-159	008096	5:188-290		
rNgog Chos rdor		kye rdo rje'i dkyil 'khor gyi cho ga mdo dang sbyar ba	1: 219-289	1: 3-49	003617			very small manuscript notes in NKCK, not in NKSB, which is the edition of another manuscript. N° 007797 is another copy
Mar pa?		yang dag tshad ma (brtags gnyis kyi 'grel pa)	Ø	1: 159-205	003620			Not in NKSB or MPSB. Maybe because the ms is very difficult to read? (DK-DZO, 5:290-379 has another version)
Mar pa	Chos rdor, rTsags, mDo sde	mnga' bdag mai tri'i gdams ngag / NKCK: mnga' bdag me tri ba'i dgu phrugs	1: 290	1: 273-315	009884	5:158-179		mai tri pa'i lam dgu phrugs?
Mar pa		mkha' 'gro ma rdo rje gur gyi brjod bya don gyi srog shing	2: 1-46	1: 249-272	#####			Both texts are together in NKCK, considered 2 and order reversed in NKSB. N° 003618 may be another copy
rNgog Chos rdor	Mar pa?	rdo rje gur gyi srog shing bzhugs so	2: 47	1: 207-248				
rNgog Chos rdor		zhal gdams bka' bzhi lo rgyus dang bcas pa bsre 'pho lag len du dril ba zab mo	2: 130			6:59-88		
rNgog Chos rdor		chags lam gyi dbang rngog lugs kyi phyag len	2: 153			61:264-282		From DK-DZO *Ras chung snyan rgyud*. Lineage p. 155. Same text than *las rgya'i man ngag zab mo*, different notes
~~rNgog Chos rdor~~	disciple of Byang chub dpal	rgyud rgyal gdan bzhi'i khrid (rgyud rgyal gdan bzhi'i rdzogs rim gyi khrid yig rin chen gsang ba'i mdzod)	2: 168	3: 245-292	013009			
rNgog Chos rdor		bar do'i gdams ngag bla ma mar pa'i gsung la rngog gis zin bris su bgyis pa	2: 209					source?
rNgog Chos rdor		'od gsal don bzhi ma	2: 217			6:142-143		

Author in NKSB	Alternative author	Title	NKSB	NKCK	DC	DK-DZO	KGND	Remarks
rNgog Chos rdor		las rgya'i man ngag zab mo	2: 219			6:185-199		cf. NKSB 2: 156-165
rNgog Chos rdor		ma ha ma ya'i rdzogs rim 'phar lungs pas mdzad pa	2: 231					Does not corresp. to DK-DZO 6:244-250
~~rNgog Chos rdor~~	Jo thog?	rtsa ba'i ltung ba bcu bzhi pa 'grel pa dang bcas pa'i ṭīkka	2: 245					
~~rNgog Chos rdor~~	mTshur ston	spyod lam gyi rnal 'byor bsdus pa	2: 312	10: 489-494				mark *phyi ma 1027* in NKCK but no such title available
~~rNgog Chos rdor~~	mTshur ston	spyod lam gyi rnal 'byor	2: 317	10: 495-502				no mark
		rje mar pa lo tsa dang rje mtshur gyi zhus lan	2: 324		007049			mark *phyi ma 1027*
rNgog Zhe sdang rdo rje		dpal brtag pa gnyis pa'i 'grel pa rin po che'i rgyan dang 'dra ba las brtag pa dang po (snying po kye yi rdo rje'i brtag pa dang po'i 'grel pa rin po che'i rgyan 'dra)	3: 1	2: 3-171				NKSB is not edited on the basis of NKCK, although the version is very similar. Maybe W19472?? Several versions in DC (n° 003378, 003615, 003616, 003778, 004021)
rNgog Zhe sdang rdo rje		dpal brtag pa gnyis pa'i 'grel pa rin po che'i rgyan dang 'dra ba las brtag pa phyi ma (snying po kye yi rdo rje'i brtag pa phyi ma'i 'grel pa rin po che'i rgyan 'dra)	3: 199					
rNgog Zhe sdang rdo rje		mkha' 'gro ma rdo rje gur gyi rnam bshad zla ba'i 'od zer (NKSB) / mkha' 'gro ma rdo rje gzer chen zhes bya ba'i rtogs brjod (NKCK)	4	1: 315-438				Mark *phyi ga 104* but no such text in Drepung catalog. N° 003288 (*phyi ga 42*) has a similar title
rNgog Zhe sdang rdo rje		gur gyi rnam bshad	Ø	1: 439-545	003561			Duplicates of the previous one. N° 003564 and n° 003565 may be other copies not reproduced in NKCK
rNgog Zhe sdang rdo rje		mkha' 'gro ma rdo rje gur gyi rnam par bshad bsdus par grags pa	Ø	1:547-640	003282			
rNgog Zhe sdang rdo rje		dpal brtag pa gnyis pa'i bsdus don	5: 1-17	3: 135-148	003563			n° 003872 may be another copy
rNgog Zhe sdang rdo rje		dpal dgyes pa rdo rje'i mngon par rtogs pa bskyed chog nyi shu pa	5: 18	3: 149-157	003322			
rNgog Zhe sdang rdo rje		dpal dgyes pa rdo rje'i mngon rtogs bsdus pa	5: 33	3: 159-175	003804			
rNgog Zhe sdang rdo rje		kyai rdo rje kyi sgo nas rab gnas bya tshul	5: 43	3: 175-189	003410			
rNgog Zhe sdang rdo rje		dpal dgyes pa rdo rje'i tshogs mchod	5: 57					?

Author in NKSB	Alternative author	Title	NKSB	NKCK	DC	DK-DZO	KGND	Remarks
rNgog Zhe sdang rdo rje		dpal dgyes pa rdo rje'i sgo nas ro sreg pa'i cho ga	5: 62		003718?			?
rNgog Zhe sdang rdo rje		nang gi sbyin sreg	5: 72	3: 199-207	003717?			*Phyi ma 1027* in NKCK. Not in DC
rNgog Zhe sdang rdo rje		phyi yi sbyin sreg	5: 78	3: 189-199				
rNgog Zhe sdang rdo rje / Thogs med grags		dpal sambhu ṭa'i rnam bshad gzhung gsal ba'i sgron ma / sambhu ṭi'i rnam bshad	5: 88-253	2: 171-244	001623			
rNgog Zhe sdang rdo rje		bsdus pa rtsa rgyud le'u dgu bcu rtsa gcig pa shlo ka 'bum bzhugs pa'i	5: 254-320	2: 245–287	001773			Title in NKCK dkar chag: 'Khor lo sdom pa'i bka' 'grel rdo rje'i phreng
rNgog Zhe sdang rdo rje		'chi ba bslu thabs rin chen sgron me	6: 1	3: 469-523				no mark
rNgog Zhe sdang rdo rje		gdan bzhi'i rgyud kyi bsdus don	6: 91	3: 207-212				*Phyi ma 125* in NKCK, no such title available in DC. N° 007293 (*phyi ma 153*) has this title but 9 folios
	Aryadeva	slob dpon arya de bas gdan bzhi'i 'dkyi khor gyi cho ga'i glad kyi yi ge bzhi	6: 99					Not announced in dkar chag
~~rNgog Zhe sdang rdo rje~~		dpal gdan bzhi pa'i de kho na nyid bzhi pa	6: 101					Tôh. no. 1620
rNgog Zhe sdang rdo rje		dpal gdan bzhi'i dbang chog / NKCK: gdan bzhi'i yum gyi dbang chog	6: 112	3: 213-245				Mark *phyi ma 775* (?). Not in Drepung catalog (n° 011134 has 12, not 16 f)
rNgog Zhe sdang rdo rje	Rin chen bzang po	dpal gdan bzhi pa'i dkyil 'khor gi cho ga	6: 148		n°011136 Potala			same text than 11:1-71 by Rin chen bzang po (could also be n° 007297)
rNgog Zhe sdang rdo rje		sgyu ma chen mo'i bsdus don slob dpon zhe sdang rdo rjes mdzad pa	6: 219-221	3: 335-338	010099			
rNgog Zhe sdang rdo rje		dpal sgyu 'phrul chen mo'i dbang gi cho ga	6: 222	3: 339-353	010101			
rNgog Zhe sdang rdo rje		ma ha ma ya'i dbang gi lhan thabs rdzogs rim gyi man ngag	6: 240		013029			
rNgog Zhe sdang rdo rje	Chos kyi rgyal mtshan?	ma ha ma ya'i bskyed rdzogs kyi man ngag	6: 242		013030			

Author in NKSB	Alternative author	Title	NKSB	NKCK	DC	DK-DZO	KGND	Remarks
rNgog Zhe sdang rdo rje		ma ha ma ya'i rdzogs rim gyi man ngag	6: 249					
rNgog Zhe sdang rdo rje		ma ha ma ya'i man ngag	6: 254		013028?			
rNgog Zhe sdang rdo rje		rgyud sde spyi'i sbyin bsreg	6: 259					?
rNgog Zhe sdang rdo rje		bdag med ma'i byin brlabs	6: 267			6:88-91		Also in MPSB, 5:173
rNgog Zhe sdang rdo rje		dpa' mo gcig ma'i sgrub thabs	6: 270					acc. to col. *bDag med ma dpa' mo gcig ma'i bskyed chog.* Lineage until Byang chub dpal
rNgog Zhe sdang rdo rje		'jam dpal gyi mtshan yang dag par brjod pa'i 'grel pa	7	3: 6-134.	013309			NKCK: mtshan brjod ṭika rgyas pa zhes bya ba
rNgog Zhe sdang rdo rje		mtshan brjod ṭī ka rngog zhe sdang rdo rje mdzad pa’o		2: 287-388	010208			
rNgog Zhe sdang rdo rje		mtshan brjod kyi ṭikka		2: 389-655	010343			
rNgog Zhe sdang rdo rje		'jam dpal gsang ldan gyi bsdus don	8: 1		007682			
rNgog Zhe sdang rdo rje		'jam dpal gsang ldan gyi sa bcad	8: 15	3: 353-357	007683			
rNgog Zhe sdang rdo rje		'jam dpal gsang ldan gyi dbang sngon du bsnyen tshul dang dbang chog	8: 21	3: 393-452	007680			
rNgog Zhe sdang rdo rje		'jam dpal rigs bsdus kyi dbang chog	8: 144-201	3: 357-391	007684			
rNgog Zhe sdang rdo rje		jam dpal gsang ldan gyi sgo nas gshun po rjes 'dzin gyi cho ga	8: 202	3: 453-464	007681			
rNgog Zhe sdang rdo rje		bdun tshig kyi bsngo ba bya tshul	8: 226	3: 465-468	007685			
rNgog Zhe sdang rdo rje		'dod khams dbang phyug dud sol ma'i phyi sgrub kyi rjes gnang gi yi ge	8: 234				6:69-73	
rNgog Zhe sdang rdo rje		'dod khams dbang phyug ma'i gsang sgrub kyi rjes gnang gi yi ge	8: 237				6: 80-81	
~~rNgog Zhe sdang rdo rje~~	Vararuci. Tr. by Nāropā & Lokasri	dpal ldan lha mo 'dod pa khams kyi dbang phyug ma'i phyi sgrub kyi gzhung mchog tu zab pa	8: 239				6: 353-364	

Author in NKSB	Alternative author	Title	NKSB	NKCK	DC	DK-DZO	KGND	Remarks
~~rNgog Zhe sdang rdo rje~~	? Mar pa?	phyi sgrub rgya gzhung gyi bsdus don	8: 249				6: 364-365	
~~rNgog Zhe sdang rdo rje~~	? Mar pa?	lha mo phyi sgrub kyi rgya gzhung 'grel pa lag len ma shin tu zab pa	8: 251				6: 365-373	
~~rNgog Zhe sdang rdo rje~~	? Mar pa?	'dod khams dbang phyug ma'i bsnyen pa'i yi ge zhal gdams mthar thug	8: 260				6: 373-375	
~~rNgog Zhe sdang rdo rje~~	? Mar pa?	lha mo'i bsnyen pa bya ba dang sgrub cing las la sbyar ba	8: 263				6: 375-377	
rNgog Zhe sdang rdo rje	? mDo sde?	'dod khams dbang phyug ma dud sol can gyi zhal gdams zab mo	8: 266				6: 377-382	
~~rNgog Zhe sdang rdo rje~~	Nāropā	zhal gdams rmi ltas ma	8: 272				6: 382-384	
~~rNgog Zhe sdang rdo rje~~	Nāropā (Bir ba pa?)	'dod khams dbang phyug ma'i gsang sgrub kyi gzhung grub chen birwa pas mdzad pa	8: 275				6: 384-387	
~~rNgog Zhe sdang rdo rje~~	Mar pa	drag mo rkang thang rno ba'i mde'u ha la reg chod	8: 279				6: 387-389	
rNgog Zhe sdang rdo rje		drag mo rkang thang yang snying bkol ba'i sgrub thabs zab pa'i mthar thug	8: 281				6: 389-391	
rNgog Zhe sdang rdo rje		'dod khams dbang phyug yang gsang rkyang thang du sgrub pa'i gdams pa zab mo	8: 284				6: 391-393	
rNgog Zhe sdang rdo rje		tshe dang bsod nams rgyas pa sogs kyi las sbyor	8: 287				6: 393-395	
rNgog Zhe sdang rdo rje		rten dang ltas ngan dbab pa'i yi ge	8: 290				6: 395-396	
rNgog Zhe sdang rdo rje		mngon shes dang pra dbab pa'i yi ge	8: 292				6: 396-401	
~~rNgog Zhe sdang rdo rje~~	rGyal tsha rDo rje sems dpa’	'dod khams kyi dbang phyug ma'i spyan 'dren bskang gso gtor gshegs rnams kyi yi ge	8: 298				6: 401-410	
rNgog Zhe sdang rdo rje	?	dud sol lha mo'i bstod rnying 'ga'	8: 309				6: 410-413	
rNgog rGyal tsha Jo thog	Zhe sdang rdo rje + Jo thog	gdan bzhi'i 'grel pa	9: 1-240	4: 3-292	009140			Title erroneously given as *dPal gdan bzhi pa khri nyis stong pa lwa ba pa'i rgyud le'u bcu drug pa'i rnam par 'grel pa yang dag par gzigs pa* in NKSB. Manuscript copied in 1460.
rNgog rGyal tsha Jo thog	bSod nams rgyal po	gdan bzhi pa'i nges don zhes bya ba / rnal 'byor nam mkha'i yum gdan bzhi pa'i nges don	9: 241	3: 293-334	013012?			no mark; possibly n° 013012, given as 16 folios instead of 21. Composed in 1317.

Author in NKSB	Alternative author	Title	NKSB	NKCK	DC	DK-DZO	KGND	Remarks
rNgog rGyal tsha Jo thog		dpal sgyu 'phrul chen mo'i rgyud kyi rnam par bshad pa bla ma'i bka' yang dag pa gsal ba zhes bya ba slob dpon asangkirtis mdzad pa	10: 1-65	3: 523-596	010097			
rNgog Kun dga' rdo rje		dgyes rdor zhal gcig pa'i sgrub thabs	10: 66					Does this correspond to the *brTag gnyis kyi dmar mchan rnams* mentionned in ST1? first folio missing in original manuscript
~~rNgog rGyal tsha Jo thog?~~	disciple of gZi brjid grags pa	dpal dgyes pa rdo rje'i khog dbub stong thun gyi sgo nas grub mtha' ngos bzung zhing rgyud sde'i byung tshul gyi 'brel pa rnam gzhag bstan pa	10: 92					Historical part on pp. 124-142. Composed by a disciple of gZi bjig grags (see p. 141)
~~rNgog rGyal tsha Jo thog~~	Seng ge sgra	dpal gdan bzhi pa'i dkyil 'khor gyi cho ga sing ha na das mdzad pa	10: 153		011138			maybe also n° 009378 or n° 011137
rNgog rGyal tsha Jo thog ?		bcom ldan 'das rdo rje gdan bzhi'i dkyil 'khor cho ga'i don gsal byed	10: 193	3: 597-627	?			mark phyi; acc. to colophon composed by *gsal ba'i ming can*;
~~rNgog rGyal tsha Jo thog~~	Rin chen dpal bzang po	'jam dpal rigs bsdus pa'i sgo nas ngan song thams cad sbyong ba'i dkyil 'khor gyi cho ga nyi ma'i 'od zer	10: 235		Potala			
rNgog Rin chen bzang po	Rin chen bzang po	dpal ldan bzhi pa'i dkyil 'khor gyi cho ga	11: 1		011136 Potala			
rNgog Rin chen bzang po	Rin chen dpal bzang po	dpal ldan bzhi pa'i rnal 'byor nam mkha'i mngon rtogs	11: 72		Potala			
rNgog Rin chen bzang po	Rin chen dpal bzang po	dpal ldan bzhi pa'i dkyil 'khor gyi gegs sel ba'i stang stabs kyi rim pa	11: 112		Potala			
rNgog Rin chen bzang po	Rin chen dpal bzang po	dpal ldan bzhi pa'i zhi ba dang rgyas pa'i sbyin bsreg gi cho ga	11: 119		Potala			
rNgog Rin chen bzang po	badzra siddha	sgyu 'phrul chen mo'i dkyil 'khor gyi cho ga	11: 134		Potala			rDo rje seng ge (= Vajrasiṃha)
rNgog Rin chen bzang po	Rin chen dpal bzang po	dpal sgyu 'phrul chen mo'i sgrub thabs	11: 188					this text and the next do not figure among Rin chen bzang po'i texts in the Potala Library
~~rNgog Rin chen bzang po~~		dpal sgyu 'phrul chen mo'i bstod pa	11: 205					toh 1638 & 1639
rNgog Rin chen bzang po	Rin chen dpal bzang po	dpal dgyes pa rdo rje'i mngon par rtogs pa	11: 208		Potala			

Author in NKSB	Alternative author	Title	NKSB	NKCK	DC	DK-DZO	KGND	Remarks
rNgog Rin chen bzang po	badzra sing ha	dpal kyai rdo rje'i dkyil 'khor gyi cho ga nyi ma 'bum gyi gzi brjid	11: 241		Potala			maybe same author as badzra siddha? = rDo rje seng ge
rNgog Rin chen bzang po		phreng ba'i dka' 'grel	11: 310		Potala			
rNgog Rin chen bzang po	rNgog gi btsun pa Rin chen dpal bzang po	dpal rdo rje phreng ba'i thig gi dka' 'grel	11: 320		Potala			In ST1, *rdo rje phreng pa'i nang gi thig* est attribué à Ratnarāja, i.e. rGyal tsha Rin chen rgyal po. This may be a commentary.
rNgog Chos kyi rgyal mtshan		dpal kya rdo rje'i 'grel pa rin chen rgyan zhes bya ba'i stod cha	12	5: 31-604				W1KG11759. Not from gNas bcu lha khang
rNgog Chos kyi rgyal mtshan		dpal kya rdo rje'i 'grel pa rin chen rgyan zhes bya ba'i smad cha	13					
rNgog bSod nams don grub	= rol pa'i rdo rje	sgyu 'phrul chen mo'i 'grel pa nyi ma'i 'od zer	14: 1	4: 355-509	008490			
rNgog bSod nams don grub		bcom ldan 'das rdo rje gdan bzhi'i sgrub thabs gsal byed nye ma'i dkyil 'khor	14: 143		011141			?
rNgog bSod nams don grub		bcom ldan 'das rnal 'byor nam mkha'i dkyil 'khor gyi cho ga zla ba'i 'od zer	14: 184		011135			?
rNgog bSod nams don grub		dpal ldan dud sol ma'i phyi sgrub kyi rjes gnang gi yi ge rgyas pa	14: 253				6: 73-80	
rNgog bsod nams bstan 'dzin		dpal ldan lha mo dud sol ma'i thun mong ma yin pa'i rjes gnang gi yi ge rgyas pa	14: 262				6: 81-91	
~~rNgog bSod nams don grub~~	sangs rgyas rin chen	dpal ldan dud sol ma'i rjes gnang	14: 272				6: 111-117	Composed by Ngor mkhan chen 08 Sangs rgyas rin chen (1450-1524)
~~rNgog~~ rin chen dpal bzang		dpal ldan lha mo'i rnga gling ma	14: 278				6: 117-118	
~~rNgog bSod nams don grub~~	sangs rgyas rin chen	dpal ldan dud sol ma'i gtor 'bul	14: 280				6: 119-123	Composed by Ngor mkhan chen 08 Sangs rgyas rin chen (1450-1524)
~~rNgog bSod nams don grub~~	sangs rgyas rin chen	dpal ldan dud sol lha mo'i bskang ba	14: 285				6: 123-130	
~~rNgog bSod nams don grub~~	Kun dga' rgyal mtshan & dPal gyi rdo rje	dod khams dbang phyug khrag 'thung dud sol ma'i phrin las rgyas pa Da ki ma'i thugs kyi ze'u 'bru dbye bar byed pa rgya tsho gsal ba'i sgron me	14: 293				6: 131-170	
rTsags Dar ma rgyal po		dpal dgyes pa rdo rje'i rgyud kyi 'grel pa gsal ba'i sgron ma (ma dper ldeb bzhi pa yan mi tshang)	15	6: 329-614				mark *phyi ga [6]5* but no such text in the Drepung Catalog

Author in NKSB	Alternative author	Title	NKSB	NKCK	DC	DK-DZO	KGND	Remarks
rTsags Dar ma rgyal po		[dpal dgyes pa rdo rje'i] mngon rtogs rgyas pa	16: 1	6: 303-329	003163			
rTsags Dar ma rgyal po		yan lag drug pa'i yig sna kye rdor gyi skor	16: 21	6: 279-303				no mark
rTsags Dar ma rgyal po		'jam dpal gsang ldan gyi rgya cher bshad pa	16: 68	7: 5-91				no mark
[sNgags 'chang pa] Grags pa rin chen		dpal gdan bzhi pa'i dkyil 'khor rgyas pa'i sgrub thabs de kho na nyid gsal ba	16: 275	4: 293-355				mark *phyi ma 775* (?) but no such text in the Drepung Catalog. Could be n° 013013 (*phyi ma 973*)
mGar ston bKra shis dbang phyug		dpal dgyes pa rdo rje'i bshad 'bum nor bu sgron me	17	6: 59-279				no mark; n° 003614?
mGar ston bKra shis dbang phyug		ma ha ma ya'i rgyud kyi 'grel pa	18: 1	6: 3-57				mark *phyi ma 5[6]4*
Phu na ratna		rdo rje gur gyi ṭikka	18: 83					Puṇyaratna (bSod nams rin chen)? Disciple de dGe slong rDo rje grags
'Jam dpal		dpal dgyes pa rdo rje'i mngon rtogs	18: 199					?
~~mGar ston bKra shis dbang phyug~~	Jam dpal	bdag med lha mo bco lnga'i sgrub thabs	18: 219					?
~~mGar ston bKra shis dbang phyug~~		bcom ldan 'das dpal kye'i rdo rje'i sbyin sreg	18: 238					Tôh 1303 by Śrīpāda
~~mGar ston bKra shis dbang phyug~~		mkha' 'gro lnga yi sgrub thabs	18: 246					Summary of tôh 1321 by Durjayacandra (mi thub zla ba)
Tshe'u ban de		rtsa ltung bcu bzhi pa yan lag dang bcas pa'i bshad pa	18: 276	5: 3-31	006633 009966			many similar titles in the Drepung Catalog
Tshe'u ban de dar re		dpal dgyes pa rdo rje brtag pa gnyis pa'i 'grel pa rin po che'i rtsar phreng	19	4: 511-795				no mark
gTsang gi bande sNgo tsha chos sku	gtsang gi ban de chos sku	snying po kye'i rdo rje rin po che'i rgyan dang 'dra ba'i bshad pa	20	7: 91-289	003285			

Author in NKSB	Alternative author	Title	NKSB	NKCK	DC	DK-DZO	KGND	Remarks
Tre ho rdo rje mgon po		dpal gsang ba 'dus pa rgyud kyi rdzogs rim rim pa lnga pa'i bsdus don	21: 1	7: 289-295				no mark
Tre ho rdo rje mgon po	?	lu hi pa'i 'grel pa'i dka' gnad gsal byed	21: 19	7: 295-335	001643			
Tre ho rdo rje mgon po		bde mchog lū i pa bzhugs/ yig sna'o/ bde mchog lu hi pa'i mngon rtogs rnam bshad	21: 97	7: 335-374	001641			
Tre ho rdo rje mgon po		bde mchog gi mngon rtogs gsal byed	21: 165	7: 375-385	001642			
Tre ho rdo rje mgon po		bde mchog lu hi pa'i lo rgyus	21: 191	7: 385-391	002897			title on 1st page as on NKSB
Tre ho rdo rje mgon po		bshad rgyud rdo rje gur gyi rnam bshad	21: 200	7: 393-465	003387			
Tre ho rdo rje mgon po		dpal dgyes pa rdo rje'i brtag pa gnyis pa'i rnam par bshad pa rin po che'i phreng ba	22: 1	7: 465-655				no mark. Could be n° 003385, but different number of pages
Tre ho rdo rje mgon po		bcom ldan dgyes pa rdo rje'i dkyil 'khor gyi cho ga	22: 297	8: 3-78	003799			authorship in NKSB, 22: 358
lCe'i bande dben tsha		kye rdor rgyud bshad / kye'i rdo rje'i rgyud kyi rnam par bshad pa bla mas ji ltar gsungs pa ltar	23: 1	8: 79-208	003560			n° 003566 may be another copy
~~lCe'i bande dben tsha~~	Rin chen dpal bzang po	dpal sri'u gcung pa'i bla ma rnams kyi rnam thar yon tan rin po che'i phreng ba	23: 251					no mark. LGNT, 42: 31-91
Shes rab mthar ldan		kye rdor rgyud bshad	24	8: 209-321	003559			
Cher ston bsod nams bzang po		he badzra'i rnam par bshad pa gsal ba'i sgron me	25	9: 217-528	003207			
sKyas bande rGya mtsho grags		dpal dgyes pa rdo rje'i rgyud kyi 'grel pa yid bzhin nor bu	26: 1	8: 453-550	003562			
sKyas bande rGya mtsho grags		bcom ldan 'das dpal 'khor lo bde mchog gi gsal byed sgron me	26: 225	8:321-453				no mark
dGe slong dBang phyug rin chen		mkha' 'gro ma rdo rje gur gyi ṭikka rin po che zla ba'i sgron ma	27	9: 3-215	003390			
Khams pa Ro mnyam rdo rje		dpal gsang ba 'dus pa'i rgyud kyi rnam par bshad pa dri ma med pa ye shes kyi snang ba	28	10: 3-489				no mark; not in the part on GS
Mi bskyod rdo rje		dpal gsang ba 'dus pa'i rgyud kyi rnam bshad dri ma med pa'i snang ba	29: 1					

Author in NKSB	Alternative author	Title	NKSB	NKCK	DC	DK-DZO	KGND	Remarks
Mi bskyod rdo rje		dpal gsang ba 'dus pa'i bskyed rim gyi man ngag rnam dag dge ba'i ljon shing	29: 195					
Mi bskyod rdo rje		yid bzhin nor bu'i ṭikka	29: 219					
Mi bskyod rdo rje		rje btsun mar pa lo tsā'i rnam thar ngo mtshar sa ma ya						announced in dkar chag but missing in the book
gSer sdings pa gZhon nu 'od		theg pa thams cad bsdus pa'i sgron me'i 'grel pa rin po che dpag bsam ljon shing	30: 1		008997			there were probably more in Drepung, cf n°010773 & 010774
gSer sdings pa		theg pa chen po'i dbang po tha ma'i nyams len rnal 'byor spyod pa sems tsam lugs	30: 172					
gSer sdings pa		rdo rje theg pa las dbang po rab kyi tha ma'i gzhi lam 'bras bu bya spyod rnal 'byor	30: 290					
gSer sdings pa		rdo rje theg pa'i dbang po rab kyi 'bring gi nyams len rnal 'byor chen po bla med	30: 344		010773 011898			
gSer sdings pa		dbang po rab kyi nyams len shin tu rnal 'byor rgyu 'bras las 'das pa'i theg pa	31: 1		010774			
gSer sdings pa		zhal gdams yid bzhin nor bu	31: 40		006997			
gSer sdings pa		ma rgyud yang snying	31: 99					
gSer sdings pa		rim lnga stan gcig gi steng du sbyar te sgom pa'i man ngag 'khor lo can	31: 108		010625			
gSer sdings pa		rim lnga don bzhi ma	31: 154		010626			
gSer sdings pa		rim lnga don lnga ma	31: 186		010627			
gSer sdings pa		bla ma gser sdings pa la zhus pa'i mkhas pa zhang ston gyi gsang snags kyi dri ba bzhi brgya pa	31: 212					
gSer sdings pa		mkhas pa'i dris lan 'od zer phreng ba	31: 225					
Mar pa Do pa		rje mar pa do pa'i nag po chos drug gi bsdus don	32: 1					
Mar pa Do pa		dpal 'khor lo sdom pa'i rtsa rgyud kyi bsdus don	32: 22					
Mar pa Do pa		rnal 'byor ma kun spyod kyi bsdus don	32: 44					

Author in NKSB	Alternative author	Title	NKSB	NKCK	DC	DK-DZO	KGND	Remarks
Mar pa Do pa		dpal 'khor lo bde mchog kyi dkyil 'khor gyi cho ga	32: 53					
Mar pa Do pa		rgyud kyi rgyal po mkha' 'gro ma kun tu spyod pa	32: 111					
Mar pa Do pa		bde mchog gi rnam bshad mar pa lo tsas mdzad pa	32: 136					
Mar pa Do pa		rnal 'byor ma kun spyod kyi rgyud kyi rnam bshad	32: 295					
Mar pa Do pa		zab pa gnyis su med pa kye'i rdo rje rtsa ba'i rgyud kyi rgya cher 'grel pa	33: 1					
rDog Āryadeva		dpal gsang ba 'dus pa'i 'grel pa sgron ma gsal bar byed pa'i ṭikka	34: 1					

Appendix 4: Table of content of the *bKa' brgyud sngags mdzod*

bKa' brgyud sngags mdzod. Paro: Lama Ngodrub and Sherab Drimed, 1982. (W20876)

Volumes are given according to the 1982 edition, with indications of where the original dPal spungs prints were breaking (according to Dil mgo mKhyen brtse's *thob yig*)

Volume 1 (ka) - Volume oṁ of dPal spungs print

Introduction and lineages

1. *dPal ldan mar ngog bka'' brgyud kyi gser chos rgyud sde rin po che rnams kyi gleng gzhi dang brgyud pa'i yi ge som nyi'i mun sel rin chen zla zer*, Kong sprul 1: 1-53

Initial virtue (*thog mar dge ba*)

White Tāra (*sGrol dkar yid bzhin 'khor lo*)

2. *'Phags ma yid bzhin 'khor lo'i brgyud pa'i gsol 'debs 'chi med grub ster*, Kong sprul 1: 55-60
3. *rJe btsun yid bzhin 'khor lo'i rjes su gnang ba dang bsnyen sgrub las gsum gsal bar byed pa'i yi ge zla ba 'dod 'jo*, Kong sprul, 1: 61-149
4. *Yid bzhin 'khor lo'i sgrub thabs zla ba 'dod 'jo sgrub mchod kyi skabs su mchod phreng cung zad rgyas pa*, Kong sprul, 1: 151-153
5. *rJe btsun ma la bstod pa sbrang rtsi'i rlabs phreng*, Kong sprul 1: 155-159
6. *sGrol ma'i sprul pa lce spyang sngon mo'i srung ba*, 1: 161-161
7. *sGrol dkar smon lam bsam 'grub lha'i ljon shing*, Kong sprul, 1: 163-169
8. *dGe ba can ma yid bzhin 'khor lo'i tshe khrid dpal ldan mar me mdzad kyi lugs gtsang la ma 'dres pa bdud rtsi'i za ma tog*, Kong sprul, 1: 171-205

Amitāyus (*Tshe dpag med*)

9. *Grub pa'i rgyal mo'i lugs kyi tshe dpag med lha gcig bum gcig gi byin rlabs dbang bskur gyi cho ga 'chi med bdud rtsi'i grol thigs*, Kong sprul, 1: 207-233
10. *Tshe dpag med grub pa'i rgyal mo'i lugs kyi bskyed rdzogs zab khrid kyi yi ge 'chi med bdud rtsi'i chu gter*, Kong sprul 1: 235-277

Three special deities (*Khyad par lha gsum: gTsug tor rnam rgyal ma, sGrol ma ljang mo, rGyal po dzaḥ nas brgyud pa'i rdo rje sems dpa'*)

11. *mNga' bdag mar pa lo tsā nas brgyud pa khyad par lha gsum gyi sgrub thabs rjes gnang dang bcas u dumbara'i chun po*, Kong sprul, 1: 279-299
12. *gSang ba'i bdag po'i sgrub thabs bdud dpung zil gnon dam nyams srog gi spu gri nyin byed 'od 'bar*, Karma pa 09 dBang phyug rdo rje, 1: 301-407

Vajrapāṇi (*Ras chung lugs kyi phyag rdor gtum chung*)

13. *Phyag rdor gtum chung gi sgrub thabs bdag mdun gyi 'don 'grigs bltas chog tu bkod pa*, Zhwa dmar 05 dKon mchog yan lag 5, 1: 409-416
14. *Phyag rdor gtum chung gi bsgrub thabs bdag bskyed dkon mchog 'bangs kyis mdzad pa dang / mdun bskyed don ldan zhabs kyis mdzad pa bsgrigs pa'i bu yig zin bris ma rungs tshar gcod*, 1: 417-431

15. *Phyag rdor gtum po'i bskyed chog*, Karma pa 09 dBang phyug rdo rje, 1: 433-435
16. *gCig shes kun grol las phyag rdor gtum po'i rjes gnang 'bring po zur phyungs su bsdebs pa*, Karma pa 09 dBang phyug rdo rje, 1: 437-453

Guru offering (*bla ma mchod pa*)

17. *Bla ma mchod pa'i cho ga yon tan kun 'byung*, Gling ras pa, 1: 455-477
18. *Lam zab bla ma mchod pa'i cho ga yon tan kun 'byung gi lhan thabs dbang chog dang bcas pa yon tan rab rgyas*, Kong sprul, 1: 479-497

Volume 2 (kha)

19. *Mar lugs rgyud sde spyi'i brgyud pa'i gtso bo rags bsdus kyi gsol 'debs byin rlabs sprin phung*, Kong sprul, 2: 1-2

'Mother' tantras (*ma rgyud, yoginītantra*)

I. Hevajra (*dgyes pa rdo rje*, *Hevajratantra*):
Hevajra nine deities (*dgyes rdor lha dgu*)

20. *bCom ldan 'das dgyes pa rdo rje'i sgrub thabs dngos grub char 'bebs*, Kong sprul, 2: 3-35
21. *dPal dgyes pa rdo rje'i dkyil 'khor gyi cho ga dngos grub rgya mtsho*, Kong sprul, 2: 37-91
22. *dGyes pa rdo rje'i bsnyen pa'i zur 'debs*, Kong sprul, 2: 93-96
23. *bCom ldan 'das dgyes pa rdo rje'i rgyun gyi rnal 'byor dran pa gcig pa*, Kong sprul, 2: 97-105
24. *'Jigs byed he ru ka dgyes pa rdo rje'i sgo nas byad bzlog pa'i man ngag gdug pa tshar gcod*, Kong sprul, 2: 107-108
25. *dGyes rdor mar lugs kyi khrid yig 'khrul med nges gsang*, Tāranātha, 2: 109-171
26. *bCom ldan 'das dgyes pa rdo rje'i las bzhi'i sbyin sreg phrin las 'od 'bar*, Kong sprul, 2: 173-187
27. *dPal dgyes pa rdo rje'i bsreg blugs kyi cho ga bsdus pa blo dman ngal gso*, Kong sprul, 2: 189-193

Nairātmyā fifteen deities (*yum bka' bdag med ma*)

28. *bCom ldan 'das ma bdag med ma'i sgrub thabs mkha' spyod them skas*, Kong sprul, 2: 195-217
29. *bCom ldan 'das ma rdo rje bdag med ma'i dkyil 'khor du dbang bskur ba'i cho ga mkha' spyod shing rta*, Kong sprul, 2: 219-236
30. *bCom ldan 'das bdag med ma'i rgyun gyi rnal 'byor dran pa gcig pa*, Kong sprul, 2: 237-239

II. Hevajra Combined families 49 deities (*dgyes rdor rigs bsdus lha zhe dgu* / from the *Vajrapañjaratantra* (*rdo rje gur*), uncommon explanatory tantra of the *Hevajratantra*)

31. *dPal dgyes pa rdo rje rigs bsdus pa'i sgrub thabs dri med nor bu'i sgron me*, Kong sprul, 2: 241-279
32. *dGyes pa rdo rje rigs bsdus pa'i dkyil 'khor gyi cho ga dri med nor bu'i chun po*, Kong sprul, 2: 281-349

33. *rDo rje gur gyi rgyud chen po'i rjes su 'brangs pa'i las dang po pa'i bya ba'i rim pa mdor bsdus pa*, Kong sprul, 2: 351-357

III. Peaceful Cakrasaṃvara Vajrasattva 37 deities (*bde mchog zhi ba rdor sems rigs bsdus lha so bdun*, from the *Saṃputatantra*, common explanatory tantra of the *Hevajra-* and *Cakrasaṃvaratantras*)

34. *dPal sampu ṭi las gsungs pa'i dkyil 'khor gyi gtso bo bde mchog zhi ba rdo rje sems dpa'i rigs bsdus pa'i sgrub thabs zung 'jug snye ma*, Kong sprul, 2: 359-396
35. *dPal sampu ṭi las gsungs pa'i dkyil 'khor gyi gtso bo bde mchog zhi ba rdo rje sems dpa' rigs bsdus pa'i dkyil 'khor gyi cho ga kha sbyor snye ma*, Kong sprul, 2: 397-457
36. *Sampu ṭa'i rgyud nas 'byung ba'i thog srung kyi man ngag*, Bu ston Rin chen grub, 2: 459-467

IV. Cakrasaṃvara (*'khor lo bde mchog*, *Cakrasaṃvaratantra*)

Vajravārāhī five deities

37. *dPal ldan lhan cig skyes ma rdo rje rnal 'byor ma'i sgrub thabs dkyil 'khor gyi cho ga gsang chen mchog gi myur lam gsal ba'i 'dren pa*, Karma pa 06 mthong ba don ldan, 2: 469-520

Volume 3 (ga)

Cakrasaṃvara five deities

38. *rJe dus gsum mkhyen pa'i thugs dam lnga tshan lnga las bde mchog lha lnga'i mngon par rtogs pa*, Karma pa 08 Mi bskyod rdo rje, 3: 3-73
39. *bDe mchog dbang gi mtshams sbyor*, Si tu 08 Chos kyi 'byung gnas 3: 75-94
40. *bCom ldan 'das mkha' 'gro bde mchog gi zhing skyong spyi dang 'byung po thams cad pa'i gtor ma'i cho ga dngos grub bum bzang*, 'Be lo Rig 'dzin Tshe dbang nor bu, 3: 95-124

V. Ṣaṭcakravarti Cakrasaṃvara (*bde mchog 'khor los sgyur drug*, from the Abhidhānottara, uncommon explanatory tantra of the *Cakrasaṃvaratantra*)

41. *dPal bde mchog 'khor los sgyur drug gi sgrub thabs ye shes snang byed*, Kong sprul, 3: 125-147
42. *dPal bde mchog 'khor los sgyur drug gi dkyil 'khor gyi cho ga ye shes rnam rol*, Kong sprul, 3: 149-201

Volume āh of dPal spungs print

VI. Buddhakapāla twenty-five deities (*sangs rgyas thod pa lha nyer lnga*)

43. *bCom ldan 'das sangs rgyas thod pa'i sgrub thabs rdo rje rin po che'i myu gu*, Kong sprul, 3: 203-231
44. *bCom ldan 'das sangs rgyas thod pa'i dkyil 'khor gyi cho ga rdo rje rin po che'i char sprin*, Kong sprul, 3: 233-281
45. *rNal 'byor ma rgyud kyi rgyal po sangs rgyas thod pa'i rdzogs rim*, Tāranātha, 3: 283-292

VII. Mahāmāyā five deities (*ma hā ma ya / sgyu ma chen mo lha lnga*)

46. *dPal sgyu 'phrul chen mo'i sgrub thabs bde chen thig le*, Kong sprul, 3: 293-317

47. *dPal sgyu ’phrul chen mo’i dkyil ’khor gyi cho ga bde chen shing rta*, Kong sprul, 3: 319-373
48. *bCom ldan ’das sgyu ’phrul chen mo’i dran pa gcig pa’i rnal ’byor zhar byung dang bcas pa*, Kong sprul, 3: 375-381
49. *dPal sgyu ’phrul chen mo’i ming gi rab byed*, 3: 383-383
50. *bCom ldan ’das sgyu ’phrul chen mo’i las bzhi’i sbyin sreg ye shes ’od kyi phreng ba*, Kong sprul, 3: 385-398
51. *sGyu ’phrul chen po’i khrid yig rgyal ba’i lam bzang zhes bya ba shin tu rnam par dag cing gsal ba*, Tāranātha, 3: 399-411

VIII. Vajracatuṣpīṭha (*rdo rje gdan bzhi*):
Yogāmbara 77 deities (*rnal ’byor nam mkha’ lha mang*)

52. *bCom ldan ’das gdan bzhi yab bka’i sgrub thabs rnal ’byor snying gi thig le*, Kong sprul, 3: 413-459
53. *bCom ldan ’das rdo rje gdan bzhi’i dkyil ’khor gyi cho ga rnal ’byor rol pa’i dga’ ston*, Kong sprul, 3: 461-527

Jñānaḍākinī 13 deities (*ye shes dbang phyug ma mha bcu gsum*)

54. *dPal rdo rje gdan bzhi’i rtsa ba’i dkyil ’khor ye shes dbang phyug ma lha bcu gsum gyi bdag nyid can gyi sgrub thabs bdud rtsi’i snyem*, Kong sprul, 3: 529-557
55. *dPal rdo rje gdan bzhi’i rtsa ba’i dkyil ’khor ye shes dbang phyug ma lha bcu gsum gyi bdag nyid can gyi dkyil ’khor gyi cho ga bdud rtsi’i ljon shing*, Kong sprul, 3: 559-593

Volume 4 (nga)

56. *bCom ldan ’das rdo rje gdan bzhi’i rgyun gyi rnal ’byor dran pa gcig pa*, Kong sprul, 4: 1-7
57. *bCom ldan ’das rdo rje gdan bzhi’i chu’i mchod sbyin gyi lag len dngos grub rgyun ’bebs*, Kong sprul, 4: 9-17
58. *dPal rdo rje gdan bzhi’i rgyud las gsal bar gsungs pa me’i sbyin sreg gi lag len ’od kyi shing rta*, Kong sprul, 4: 19-32
59. *rDo rje gdan bzhi’i khrid yig ye shes sgo ’byed*, Tāranātha, 4: 33-79

“Father” tantras (*pha rgyud, mahāyogatantra*)

IX. Guhyasamāja of the Aryā tradition 33 deities (*gsang ’dus ’phags lugs mi bskyod rdo rje lha so gsum*)

60. *Bla ma la gsol ba ’debs pa ci bsam kun ’grub*, Bu ston rin chen grub, 4: 81-87
61. *dPal gsang ba ’dus pa mar lugs kyi sgrub thabs zung ’jug lam gyi sgron ma*, Kong sprul, 4: 89-139
62. *dPal gsang ba ’dus pa’i dkyil ’khor gyi cho ga zung ’jug lam gyi shing rta*, Kong sprul, 4: 141-213
63. *dPal gsang ba ’dus pa’i rgyun gyi rnal ’byor dran pa gcig pa*, Kong sprul, 4: 215-217
64. *dPal gsang ba ’dus pa’i las bzhi’i sbyin sreg dge legs rab gsal*, Kong sprul, 4: 219-238
65. *Rim lnga’i dmar khrid kyi man ngag yid bzhin nor bu’i za ma tog*, Bu ston rin chen grub, 4: 239-283

66. *dPal gsang ba ’dus pa’i rdzogs rim rim lnga dmar khrid kyi zin bris yid bzhin nor bu’i za ma tog gi kha ’byed pa’i lde mig*, Kong sprul ?, 4: 285-319
67. *gSang ’dus ’phags lugs rim lnga smar khrid gdan rdzogs kyi khrid yig ’khrul pa’i dri bral zhes bya ba mar pa’i dgongs pa ji lta ba*, Tāranātha, 4: 321-349
68. *’Phags lugs rim pa lnga pa stan thog gcig tu nyams su len tshul gyi yi ge bdud rtsi’i thigs pa*, Kong sprul, 4: 351-357
69. *’Phags lugs rim pa lnga pa’i sngon ’gro’i ngag ’don gsung rgyun ji lta bar bkod pa ye shes them skas*, Kong sprul, 4: 359-373

X. Mañjuśrī Nāmasaṃgīti 53 deities – *gSang ldan* tradition (*’jam dpal mtshan mrjod gsang ldan lugs*)

70. *rGyud thams cad kyi bdag po ’jam dpal mtshan brjod rigs bsdus pa’i sgrub thabs ye shes ’bar ba’i ral gri*, Kong sprul, 4: 375-409
71. *’Jam dpal rigs bsdus kyi dkyil ’khor gyi cho ga gsang ba kun ’byung gi glegs bam*, Kong sprul, 4: 411-463
72. *rGyud kyi rgyal po bstod pa glur blangs bklag pa’i rgyun gyi rnal ’byor yan lag brgyad dang bcas pa yid kyi gdung sel*, Kong sprul, 4: 465-477
73. *mTshan yang dag par brjod pa’i rnal ’byor bsgom pa’i rim pa ye shes rab gsal*, Kong sprul, 4: 479-487
74. *bCom ldan ’das ’jam dpal rigs bsdus pa’i las gnyis rnam par dbye ba’i cho ga dri ma med pa’i gzi brjid*, Kong sprul, 4: 489-503

Volume 5 (ca) - Volume hūṁ of dPal spungs print

XI. Red Yamāntaka five deities (*gshin rje gshed dmar lha lnga*)

75. *bCom ldan ’das gshin rje gshed dmar po lha lnga’i sgrub thabs bgegs ’joms ye shes be con*, Kong sprul, 5: 3-28
76. *bCom ldan ’das gshin rje gshed dmar po lha lnga’i dkyil ’khor gyi cho ga bde skyong bcud kyi ’phrul zhag*, Kong sprul, 5: 29-83

XII. Vajrabhairava nine deities (*rdo rje ’jigs byed lha dgu*)

77. *dPal rdo rje ’jigs byed lha dgu’i bdag nyid can gyi sgrub thabs bdud ’joms grub pa’i ral gri*, Kong sprul, 5: 85-109
78. *bCom ldan ’das rdo rje ’jigs byed lha dgu’i bdag nyid can gyi dkyil ’khor gyi cho ga bdud ’dul ’phrul gyi rno mtshon*, Kong sprul, 5: 111-177

(XIII. Vajrapāṇi: included in the initial virtue though it is one of the thirteen highest yogas tantras)

General Mar pa bka’ brgyud rituals (gaṇacakras, retreat manuals, consecration rituals, instructions)

79. *Mar lugs bla med rgyud sde spyi’i tshogs mchod kyi cho ga yongs ’du’i snye ma*, Kong sprul, 5: 179-188
80. *rNgog dkyil tshogs mchod ’don ’grigs dpal karma kaṁ tshang gi phyag bzhes ltar na*, 5: 189-190
81. *rJe btsun lho brag pa’i khyad par gyi gdams pa snyan gyi shog dril bzhi’i lo rgyus gzhung lhan thabs dang bcas pa*, 5: 191-224

82. *Mar lugs rgyud sde rnams kyi bsnyen pa ji ltar bya ba'i yi ge rin chen gru gzings*, Kong sprul, 5: 225-367
83. *rTen gsum rab tu gnas pa'i cho ga kun mkhyen rang byung yab sras kyi bzhed pa'i snying po bsdus pa rnam dag dgongs gsal*, Kong sprul, 5: 369-389
84. *Mar lugs rgyud sde rnams kyi dbang bskur ba'i mtshams sbyor 'gres chog tu bkod pa rdo rje'i chun 'phyang*, Kong sprul, 5: 391-428
85. *Mar lugs rgyud sde rnams kyi dbang bshad snyims pa'i me tog*, Kong sprul, 5: 429-477

Volume 6 (cha)

Four-arm Mahākāla thirteen deities (*ye shes kyi mgon po nag po chen po phyag bzhi pa*)

86. *dPal ye shes kyi mgon po phyag bzhi pa lha bcu gsum gyi mngon rtogs dbang khrid sgrub rgyud karma kaṃ tshang gi lugs sangs rgyas mnyan pa chen po'i zhal snga nas brgyud pa'o*, Sangs rgyas mnyan pa, 6: 1-18
87. *Kun mkhyen mi bskyod zhabs kyis bstsal ba'i phyag bzhi pa lha bcu gsum ma rga lo'i lugs kyi smin byed dbang bzhi gtor dbang dang bcas pa'i lhan thabs bklag chog tu bkod pa dpal ldan bla ma'i zhal lung byin rlabs char 'bebs*, Karma pa 14, 6: 19-33

Vajramahākāla (*rdo rje nag po chen po*, as taught in the *Pañjaratantra*; also called Gur mgon)

88. *dPal rdo rje nag po chen po'i sgrub thabs rjes gnang dang bcas pa rdo rje rol pa*, Kong sprul, 6: 35-51

Dhūmāṅgārī (Dud sol ma, as taught in the *Catuṣpīṭha*- and other tantras)

89. *dPal ldan lha mo 'dod pa khams kyi dbang phug ma 'jigs byed dud pa'i sol ba can gyi chos skor gyi dkar chag snyan brgyud gsal ba'i me long*, Tshar chen Blo gsal rgya mtsho, 6: 53-67 (ka)
90. *'Dod khams dbang phyug dud sol ma'i phyi sgrub kyi rjes gnang gi yi ge*, Zhe dang rdo rje, 6: 69-91 (kha)
    - *dPal ldan dud sol ma'i phyi sgrub kyi rjes gnang gi yi ge rgyas pa (phrin las lhun grub)*, rNgog gZhung pa bSod nams don grub (written in *sa mo glang* 1469), p. 73 (ga)
    - *'Dod khams dbang phyug ma'i gsang sgrub kyi rjes gnang gi yi ge*, Zhe sdang rdo rje, p. 80 (nga)
    - *dPal ldan lha mo dud sol ma'i thun mong ma yin pa'i rjes gnang gi yi ge rgyas pa*, rNgog bsod nams bstan 'dzin, p. 81 (ca)
91. *bsTan srung gtso mo dud sol ma'i phyi sgrub dang / gsang sgrub thun mong ma yin pa'i rjes gnang nan chags mar grags pa bklags chog tu bkod pa ḍā ki'i thugs kyi ze'u 'bru*, Kong sprul, 6: 93-110
92. *dPal ldan dud sol ma'i rjes gnang*, Sangs rgyas rin chen, 6: 111-130
    - *dPal ldan lha mo'i rnga gling*, rNgog Rin chen dpal bzang, p. 117
    - *Phyi sgrub rgya gzhung gi bsdus don*, p. 118 (same text than p. 364)
    - *dPal ldan dud sol ma'i gtor 'bul*, Sangs rgyas rin chen, p. 119
    - *dPal ldan dud sol lha mo'i bskang ba*, Sangs rgyas rin chen, p. 123
93. *'Dod khams dbang phyug khrag 'thung dud sol ma'i phrin las rgyas pa dā ki ma'i thugs kyi ze'u 'bru dbye bar byed pa rgya mtsho gsal ba'i sgron me*, Kun dga' rgyal mtshan and dPal rdo rje, 6: 131-170
94. *'Dod khams dbang phyug dpal ldan lha mo dud pa'i sol ba ma'i phrin las kyi cho ga ma mo dgyes pa'i rol mtsho*, Kong sprul, 6: 171-225

95. *bsTan srung gtso mo dud sol ma'i gtor chog 'bring po yongs 'dus ljon pa'i skyed tshal*, Kong sprul, 6: 227-244
96. *bsTan srung gtso mo dud sol ma'i gtor chog dbyar rnga'i sgra dbyangs*, Kong sprul, 6: 245-251
97. *dPal lha mo nag mo'i dngos grub thams cad 'byung ba'i rgyud*, 6: 253-281
98. *mKha' 'gro ma me lce 'bar ba zhes bya ba ma mo spyi'i rgyud*, 6: 283-351
99. *dPal ldan lha mo 'dod pa'i khams kyi dbang phyug ma'i phyi sgrub kyi gzhung mchog tu zab pa*, Bram ze mChog sred (Brahmin Vararuci), 6: 353-364 (nya)
    - *Phyi sgrub rgya gzhung gi bsdus don*, p. 364
    - *lHa mo phyi sgrub kyi rgya gzhung ga 'grel pa lag len ma shin tu zab pa*, p. 365
    - *'Dod khams dbang phyugma'i bsnyen pa'i yi ge bla ma'i zhal gdams mthar thug*, p. 373 (da)
    - *lHa mo'i bsnyen pa bya ba dang sgrub cing las la sbyar ba*, p. 375 (na)
    - *'Dod khams dbang phyug ma dud sol can gyi zhal gdams zab mo*, p. 377 (pa)
    - *Zhal gdams rmi ltas ma*, p. 382 (pha)
    - *'Dod khams dbang phyug ma'i gsang sgrub kyi gzhung*, Birvapa, p. 384
    - *Drag mo rkang rno ba'i mde'u ha la reg chod*, p. 387 (tsa)
    - *Drag mo rkang thang yan snying bkol ba'i sgrub thabs zab pa'i mthar thug*, Zhe sdang rdo rje, p. 389 (dza)
    - *'Dod khams dbang phyug yang gsang rkang thang du sgrub pa'i gdams pa zab mo*, Zhe sdang rdo rje, p. 391 (wa)
    - *Tshe dang bsod nams rgyas pa sogs kyi las sbyor*, p. 393 (zha)
    - *rTen dang/ ltas ngan dbab pa'i yi ge, bla ma rngog gi phyag dpe*, p. 395 (za)
    - *dNgon shes dang pra dbab pa'i yi ge*, Zhe sdang rdo rje, p. 396 ('a)
    - *'Dod pa khams kyi dbang phyug ma'i spyan 'dren skang gso gtor gshegs rnams kyi yi ge*, rDo rje sems dpa', p. 401
    - *Dud sol lha mo'i bstod rnying 'ga'*, p. 410 (la)

<u>Five Sisters bKra shis tshe ring ma</u> (*bkra shis tshe ring ma mched lnga*, general protector of the "practice lineage," *bsgrub brgyud*)

100. *bsTan srung gtso mo bkra shis tshe ring mched lnga'i rtsa ba'i gzhung*, 6: 415-435
101. *Tshe ring mched lnga'i mchod gtor gyi rim pa*, Zhwa dmar 06 Chos kyi dbang phyug, 6: 437-460
102. *lHa sman bkra shis tshe ring ma mched lnga'i mchod gtor dang sbrel ba'i bskang ba*, Si tu 08 bstan pa'i nyin byed, 6: 461-464
103. *lHa sman bkra shis tshe ring ma'i phrin las la brten nas tshe g.yang sgrub pa'i cho ga bkra shis gter mdzod*, Kong sprul, 6: 465-492
104. *lHa sman bkra shis tshe ring ma'i sgo nas 'jig rten dang 'jig rten las 'das pa'i rjes gnang bkra shis tshe dbang rab rgyas*, Kong sprul, 6: 493-526

Appendix 5: Maps and photographs

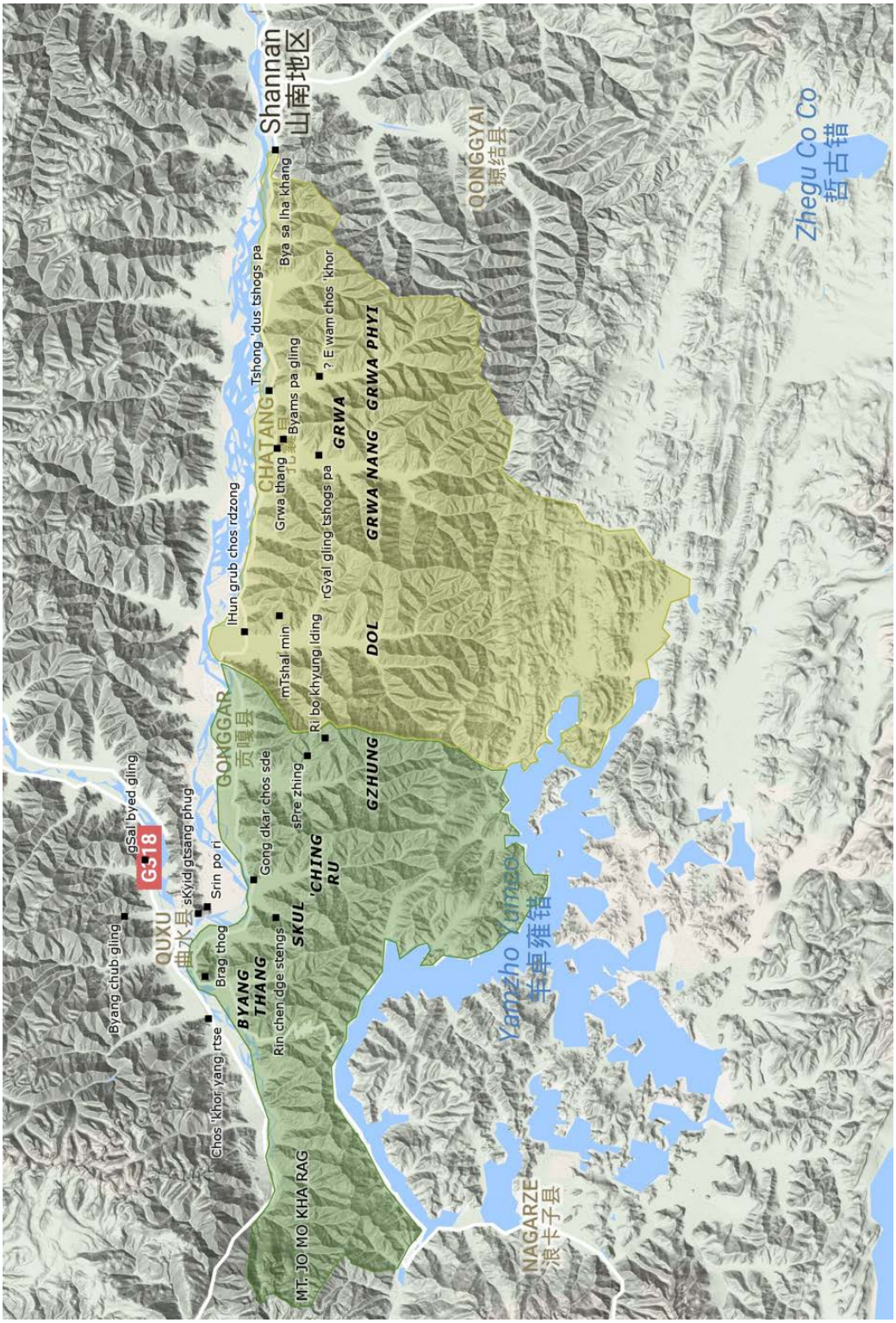

Monastic communities under Gong dkar and Yar rgyab, 15th-16th centuries. Courtesy of Mathias Fermer (Fermer forthcoming, (79)

Places associated with the rNgog in the gZhung (rNam rab) Valley. Source: Google Earth.

The rNam rab Valley seen from the plane landing in Gong dkar Airport, June 2014 (Photograph: Cécile Ducher)

sPre’u zhing Temple after its restoration in the 1980s (courtesy Mathias Fermer)

sPre’u zhing temple in 2014 (Photograph: Cécile Ducher)

The sPre’u zhing Temple before its reconstruction, seen from the Solitary Place where Chos rdor departed for Khecara. Ruins of a Gong dkar chos sde retreat centre (Courtesy Mathias Fermer)

Mi la ras pa’s cave (Photo: Mathias Fermer)

Résumé en français

L'implosion politique de l'Empire Tibétain au cours du IXe siècle laissa derrière elle un Tibet fragmenté. Pendant les Xe et XIe siècles, après plusieurs décennies « d'obscurité », le Tibet et le bouddhisme tibétain commencèrent à reprendre forme[1858]. Ce fut une période d'intense renouvellement lors de laquelle de nombreux Tibétains voyagèrent vers le sud, au Népal et en Inde, pour recevoir les transmissions bouddhiques ayant décliné chez eux. L'un de ces traducteurs tibétains fut Mar pa Chos kyi blo gros (1000 ? -1081 ?), un jeune homme indiscipliné qui passa d'abord quelques années au Népal avant de faire plusieurs séjours dans les jungles et forêts indiennes afin de recevoir les techniques méditatives les plus sophistiquées de l'époque, les tantras du yoga insurpassable (*rnal 'byor bla na med pa'i rgyud ; yoganiruttaratantra*). Au contraire de beaucoup de ses collègues, Mar pa ne fit que traverser les grandes universités bouddhiques de l'époque afin de séjourner auprès de yogis, particulièrement Nāropa et Maitripa. Après une vingtaine d'année d'apprentissage et d'entraînement en Inde, ayant accumulé beaucoup d'or et l'ayant offert à ses maîtres en échange de leurs instructions, Mar pa revint au Tibet au milieu du XIe siècle et s'installa dans le lHo brag. Rapidement, des disciples s'assemblèrent. Parmi eux se trouvaient de nombreux fils de bonne famille qui s'éloignaient des tantras anciens afin de recevoir les nouveaux. L'un d'eux était rNgog Chos rdor (1023-1090). Son lignage remontait au Ve siècle et s'enorgueillissait d'ancêtres nobles et distingués. Chos rdor était très dévoué à Mar pa et reçut de lui la transmission de plusieurs cycles tantriques comme *Hevajra*, *Catuṣpītha* et *Mahāmāyā* en échange de somptueuses offrandes. Il se spécialisa dans l'exégèse tantrique des traditions de Mar pa, particulièrement connues pour leurs instructions clés (*gdams ngag*) venant de Nāropa. Il était maître de maison et avait un fils, rNgog mDo sde, qui à son tour reçut de Mar pa, de son père et des disciples de son père tous ces cycles tantriques renommés et implanta durablement les traditions de Mar pa au Tibet pendant la première moitié du XIIe siècle. Il composa la plupart des textes de la tradition rNgog et influença ceux qui furent composés par la suite. Il maîtrisa les enseignements de son père et en requit d'autres qui ne faisaient pas partie de l'héritage de Mar pa, comme *Saṃputa* et *Vajravārāhī*. Plus particulièrement, il réunit dans sa vallée de gZhung la plupart des reliques de Mar pa qui devinrent le trésor le plus précieux du siège pendant des siècles et définirent le style de mDo sde à l'instar de celui de Mar pa : comme son prédécesseur, sa divinité d'élection fut Hevajra et sa divinité protectrice Dud sol ma, et comme lui, il n'était pas moine.

rNgog mDo sde n'était pas le seul à posséder l'enseignement de Mar pa. En fait, les lignages se réclamant de Mar pa abondaient. Au début du XIIe siècle, deux des maîtres les plus célèbres étaient sGam po pa bSod nams rin chen (1079-1153) et Ras chung pa rDo rje grags (1084-1161), deux des disciples du yogi Mi la ras pa (1028 ? -1111 ?), qui avaient, chacun, développé un style distinct[1859]. Ras chung pa, sans doute plus proche de Mi la ras pa, initia la tradition du sNyan brgyud centrée sur la pratique de *Cakrasaṃvara*. sGam po pa, longtemps moine de la

[1858] Dalton 2011, Davidson 2005.

[1859] Voir Yamamoto 2012, 29-31 sur la notion de style.

tradition bKa' gdams pa, fonda un monastère et développa une approche plus progressive et moins exclusivement tantrique du mahāmudrā[1860]. Ainsi, rNgog mDo sde, Ras chung pa et sGam po pa représentaient les trois courants principaux d'une école bKa' brgyud naissante, mettant l'accent respectivement sur l'exégèse tantrique, les pratiques ésotériques associées à Cakrasaṃvara et la voie progressive (*lam rim*) menant à la réalisation du mahāmudrā. Les trois hommes se connaissaient. rNgog mDo sde et Ras chung se rencontrèrent au moins une fois, et certains des écrits de mDo sde et de sGam po pa se font écho, témoignant d'un échange de textes entre eux. Il est malaisé d'établir en quelques lignes comment ils étaient perçus à leur époque, mais il est évident que l'épanouissement de nombreuses lignées après sGam po pa et l'un de ses disciples, Phag mo gru pa rDo rje rgyal po (1110-1170) – les « quatre [traditions] bKa' brgyud primaires et les huit secondaires » (*bka' brgyud che bzhi chung brgyad*) – renforça le poids des tradition Dwags po bKa' brgyud et la canonisation de ses trois premiers membres, Mar pa, Mi la ras pa et sGam po pa (*mar mi dwags gsum*). Cette simplification des nombreux lignages s'étant développés au XIIe siècle fit tomber les autres acteurs de la période à l'arrière-plan. Cette thèse a pour objectif de remettre en lumière l'un de ces lignages, les rNgog pa bka' brgyud issus de mDo sde et de son père Chos rdor.

L'une des questions ayant motivé la présente étude est de comprendre les raisons gouvernant le succès du lignage héréditaire rNgog pa bka' brgyud et son oubli relatif par rapport à d'autres lignages bKa' brgyud. Le « succès » ici désigne le fait que les rNgog furent considérés comme les héritiers légitimes de Mar pa et les tenants les plus authentiques de certaines de ses traditions tantriques. « L'oubli » fait référence au fait que les sources sur les rNgog étaient jusqu'à récemment très lacunaires, qu'ils étaient peu connus des Tibétains au sens large et que leurs traditions auraient été perdues sans les efforts de 'Jam mgon Kong sprul Blo gros mtha' yas (1813-1899) pour les faire revivre dans l'un de ses cinq « trésors », le *Trésor des mantras bKa' brgyud* (*bKa' brgyud sngags mdzod*). Il n'y a pas de réponse simple à ce questionnement, mais plusieurs perspectives sont adoptées pour avancer quelques éléments de réponse.

Une première approche permettant de comprendre le différentiel entre l'importance vraisemblable de rNgog mDo sde au XIIe siècle et l'oubli relatif dans lequel son lignage tomba par la suite est la critique des sources. Les sources écrites, et plus particulièrement les récits biographiques et historiographiques, sont en effet notre porte d'entrée pour cette période. Comme le montre plusieurs études[1861], il existe un très grand nombre de biographies de Mar pa, de Mi la ras pa et, dans une moindre mesure, de Ras chung pa. L'une des raisons pour cela est l'importance accordé par la tradition du sNyan brgyud à l'écriture biographique, permettant ainsi une bonne connaissance du lignage religieux. Les instructions du sNyan brgyud sont en effet regroupées en « trois joyaux magiques » (*yid bzhin nor bu skor gsum*), dont le premier est le « joyau magique du lignage » (*brgyud pa yid bzhin nor bu*)[1862], qui consiste à établir les caractéristiques du maître et du disciple et est constitué des biographies des maîtres successifs du lignage. Ainsi, faire part des qualités du maître en relatant l'exemple de leur complète

---

[1860] Scheuermann 2015.

[1861] Roberts 2007, Quintman 2014, Ducher 2017.

[1862] Sernesi 2010, 404-408. Les deux autres sont le joyau magique du chemin de maturation (*smin lam yid bzhin nor bu*) et le joyau magique du chemin de libération (*grol lam yid bzhin nor bu*).

libération est la première étape, indispensable, de la pratique du sNyan rgyud, et cela explique l'importance que les détenteurs et pratiquants de cette tradition donnèrent à la composition de *rnam thar*, souvent sous forme de rosaires d'or. L'un des détenteurs tardifs de cette tradition fut gTsang smyon He ru ka (1452-1507). Son talent littéraire et ses qualités dans l'art de la communication, notamment grâce au développement de l'imprimerie, permirent à ses longs récits sur la vie de Mar pa et de Mi la ras pa d'avoir un retentissement très large, et d'accroître encore la place qu'ils occupent dans le paysage religieux tibétain, devenant des modèles pour des générations d'adeptes bKa' brgyud pa de tous ordres[1863]. Ainsi, une première raison qui explique la célébrité de Mar pa et de Mi la ras pa, bien que les détails de leur vie soient ensevelis dans des siècles d'écrits, est qu'ils furent l'objet de nombreuses biographies dans la tradition du sNyan brgyud.

Une deuxième raison de la présence prégnante de ces maîtres dans le paysage tibétain est la prolifération des écoles bKa' brgyud après sGam po pa. Les détenteurs des quatre ordres primaires et des huit ordres secondaires considèrent tous descendre de Mar pa, Mi la ras pa et sGam po pa. Bien qu'ils ne mettent pas tous autant l'accent sur l'écriture biographique que dans le sNyan brgyud, la quantité de ces sous-écoles favorisa l'éclosion d'un grand nombre de biographies de Mar pa, Mi la ras pa et sGam po pa, souvent sous la forme de « rosaires », c'est-à-dire de collections de biographies successives.

La combinaison de ces deux facteurs explique la quantité disproportionnée des biographies de Mar pa et Mi la ras pa surtout, et de sGam po pa et Ras chung pa ensuite. Ceci explique en partie pourquoi, aujourd'hui comme hier, nous nous souvenons mieux de ces maîtres que de rNgog mDo sde et de son lignage héréditaire. Les rNgog avaient une culture de l'écriture exégétique et biographique. Tous les commentaires de *Hevajra* de la tradition rNgog contiennent ainsi une partie qui « explique qui a dispensé la [transmission de *Hevajra*] dans le monde humain » (*mi yul du sus spyan drangs pa bshad pa*). Cette section s'interrompt cependant systématiquement avec rNgog Chos rdor. Si elle mentionne des membres postérieurs du lignage, ce n'est qu'avec peu de détails. Les rNgog écrivirent des récits narrant la vie de Nāropa et de Mar pa, mais ne composèrent pas de récit complet de leur propre lignage avant la fin du XIVe siècle, et ce texte est loin d'être aussi approfondi que les biographies des « pères fondateurs » du mouvement bKa' brgyud. Ainsi, la représentation disproportionnée de Mar pa, Mi la ras pa et sGam po pa dans des écrits ayant une forte valeur religieuse explique qu'ils sont mieux connus que les rNgog, bien que mDo sde ait été vraisemblablement un personnage tout aussi important au milieu du XIIe siècle que le furent sGam po pa et Ras chung pa.

Une seconde approche éclairant ce différentiel de succès est une analyse socioreligieuse de la position des rNgog dans le champ religieux du début du second millénaire au Tibet Central. rNgog mDo sde était un personnage important du XIIe siècle et a joué un rôle actif dans l'établissement de sa tradition dans une position dominante de ce champ. Nous pourrions dire, inspirés par les théories de Max Weber, que mDo sde était une figure charismatique et que son

[1863] Sernesi 2011, Quintman 2014, 125-134.

lignage est un exemple de quotidianisation de la domination charismatique[1864]. Le monde social dont il est question ici est cependant un espace social dans lequel la religion était fortement prisée. Les chefs religieux détenaient un pouvoir manifeste et étaient soient des maîtres charismatiques soit leurs successeurs. On pourrait donc considérer que ce type de domination était fréquente et que dire que tel ou tel est charismatique, outre le fait qu'il est malaisé de l'attester, ne nous aide guère à comprendre la distinction que cela pouvait créer. Ce n'est donc pas l'approche adoptée dans cette thèse, où nous considérons plutôt les rNgog comme des agents dans un monde social plus large. En nous appuyant sur les théories de champ et d'espèces de capital régulant les champs développées par Pierre Bourdieu (1930-2002), nous examinons la position des membres successifs du lignage rNgog en prenant en considération la quantité et la qualité des capitaux qu'ils détenaient. Cette analyse révèle que rNgog mDo sde possédait nombre des types de capitaux qui pouvaient influencer son champ à l'époque : il venait d'une famille riche possédant le capital économique lui permettant d'acquérir les transmissions tantriques et de construire une structure durable pouvant les préserver et les transmettre. Il avait hérité de son père des enseignement spécifiques très prisés de la période, comme les tantras du yoga et du yoga insurpassable[1865], et ces traditions étaient particulièrement prestigieuses car elles venaient de siddhas et de paṇḍitas indien reconnus, comme Nāropa, Maitripa ou Smṛtijñānakīrti. mDo sde possédait ainsi un capital religieux distinct qu'il incarnait car il les avait reçus directement de la source, Mar pa, et parce qu'il en avait obtenu une connaissance et une expérience personnelle profonde. Il possédait également un capital religieux concret, comme les reliques de Mar pa et plusieurs objets rituels hérités de Mar pa et de son père. mDo sde eut également une carrière active et prolongée, recevant des transmissions des maîtres les plus prestigieux de la période (les *lo tsā ba*), formant un nombre conséquent de disciples, acquérant ainsi un capital social considérable. Ceci lui permit d'occuper une position dominante dans son champ et d'être à même de contribuer à la structuration du champ religieux tibétain, au même titre que d'autre personnages dominants de l'époque, comme Ras chung pa et sGam po pa, ainsi que des membres d'autres lignages comme Sa chen Kun dga' snying po (1092-1158)[1866], Khyung po rnal 'byor (1050 ? -1127)[1867] et d'autres. Ses descendants possédaient aussi une quantité substantielle des différentes espèces de capital, globalement les mêmes que celles décrites ci-dessus. Cependant, au contraire de mDo sde qui parvint à façonner le champ afin qu'il corresponde à sa position, ses héritiers continuèrent d'occuper la même position mais dans un champ mouvant, de plus en plus modelé par d'autres agents qui le transformaient pour correspondre à la structure de leur propre capital. Ils se formèrent ainsi au « véhicule des caractéristiques » (la formation exotérique bouddhique) et s'adaptèrent à l'essor du monachisme dans le champ religieux tibétain. En s'adaptant, ils furent modelés par d'autres, et occupaient donc une position plus dominée dans l'espace social.

[1864] Weber 2015, 269-274 et 291-312. Un exemple d'une telle approche dans les études tibétaines est Valentine 2013.

[1865] Isaacson and Sferra 2015 pour la distinction des classes de tantra ; Weinberger 2010 pour l'importance des tantras du yoga, et par exemple Davidson 2005 pour celle du yoga insurpassable.

[1866] Stearns 2001, Davidson 2005.

[1867] Kapstein 1980.

Un autre facteur social expliquant l'expansion limitée du lignage rNgog est son caractère héréditaire. Bien que rNgog mDo sde et ses descendants aient enseigné les traditions rNgog à des disciples qui n'étaient pas de leur sang (ou plus littéralement de leur « os ») et que certains d'entre eux soient devenus des détenteurs des lignées de *Hevajra* ou *Catuṣpītha* selon la tradition rNgog, particulièrement réputée pour son efficience à porter des fruits dans la méditation, ils n'incarnaient pas les traditions rNgog de la même façon que les membres du lignage familial et n'initièrent donc pas de branches du lignage rNgog. Les traditions rNgog furent incorporées dans d'autres ordres mais le lignage religieux rNgog lui-même continua d'être essentiellement associé au lignage héréditaire rNgog jusqu'au XVe siècle. A cette époque, les changements sociaux et politiques qui transformaient le Tibet Central, comme par exemple le renforcement des affiliations sectaires et le développement des lignages d'incarnation, furent tels que la famille rNgog ne parvint plus à maintenir une identité indépendante et significative. Les descendants familiaux perpétuèrent les lignées familiales et religieuses jusqu'au début du XVIIe siècle, mais leur siège fut finalement repris par le monastère voisin de Gong dkar chos sde, qui, lui, avait accumulé une telle quantité de capital économique, politique, social et religieux que son pouvoir symbolique pouvait rivaliser avec celui des autres agents dominants. Après cette date, les traditions rNgog furent préservées dans d'autres ordres, mais le lignage héréditaire rNgog cessa.

Finalement, une troisième approche expliquant la trajectoire des rNgog, celle suivie de la manière la plus approfondie dans la présente étude, est une historiographie religieuse classique. Le lignage familial rNgog et le lignage religieux rNgog pa bka' brgyud étaient en effet globalement méconnus jusqu'à aujourd'hui, que ce soit dans les sources tibétaines, qui ne couvrent pas toute la période et ne font pas de recoupements extensifs et explicatifs sur le réseau religieux tissé par les rNgog, ou dans les sources occidentales. La deuxième partie de cette thèse retrace donc l'histoire religieuse des rNgog, dont le lignage prit ses sources dans l'Inde du Xe siècle, fut acculturé au Tibet par Mar pa et traversa le deuxième millénaire. C'est aussi leur histoire familiale, de ses origines mythiques à son expansion au XIIe siècle et sa dispersion silencieuse dans le fracas des transformations du XVIIe siècle.

Partie I : Orientations

La première partie de cette thèse, « Orientations », est constituée de trois chapitres. Elle donne le cadre de l'historiographie détaillée de la deuxième partie et analyse les données permettant de répondre aux questions mentionnées dans l'introduction. Le premier chapitre est une étude des sources, variées et nombreuses, permettant d'accéder à une connaissance des rNgog. Le deuxième chapitre présente les transmissions qui constituent la tradition rNgog, distinguant notamment les sources indiennes et la façon dont elles ont été reçues par rNgog Chos rdor, le fondateur du lignage religieux héréditaire. Le troisième chapitre examine le concept de lignage et propose une analyse sociale des données présentées dans la deuxième partie.

Chapitre 1 : Sources

Pour écrire l'histoire du lignage familial et religieux rNgog, les sources sont surtout textuelles et appartiennent à des genres divers. Comme pour la plupart des sujets dans les études religieuses tibétaines, les rNgog sont connus par ce que l'on a écrit sur eux ou par les ouvrages qu'eux-mêmes ou ceux qui leur sont liés ont composés, non grâce à des registres de naissance ou des contrats civils. Leur statut nobiliaire n'est pas défini. Bien qu'ils soient décrits comme faisant partie de l'élite religieuse et sociale du Tibet Central, les conditions sociales dans lesquelles ils vivaient, l'identité des paysans qui labouraient leurs champs et leur payaient des taxes et celle des pèlerins qui visitaient leur siège et leur faisaient des offrandes sont pour la plupart inconnues. Les sources disponibles renseignent principalement sur les aspects religieux de la vie sociale de gZhung mais les aspects matériels et pratiques ne sont que brièvement évoqués.

Méthodologie et traitement des sources

Trois types de sources sont utilisées dans cette thèse, que l'on pourrait nommer biographiques, historiques et religieuses. La biographie et l'historiographie ne sont pas très différentes dans un contexte tibétain prémoderne, et les écrits religieux, par exemple les commentaires et rituels tantriques, contiennent aussi des matériaux historiques et biographiques. Le premier chapitre s'attache donc à distinguer et décrire les différents types de sources utilisées, en commençant par une description de la façon dont la biographie est abordée.

En tibétain, le mot traduit par « biographie » est *rnam thar*, qui signifie littéralement « complète libération » et peut aussi être traduit par « hagiographie », c'est-à-dire la biographie d'un saint. Au XXe siècle en Occident, l'hagiographie et la biographie furent considérées avec suspicion ou comme un genre réservé aux amateurs. Dans les années 80, les grands paradigmes ont cependant perdu de leur pouvoir structurant, et l'intérêt s'est porté vers l'étude de la singularité,

des petits, du quotidien, d'où un regain d'intérêt pour le genre biographique[1868]. De même, l'hagiographie (l'une des sources majeures de données historiques dans les études tibétaines et bouddhiques), après avoir été considérée comme une source insatisfaisante mais inévitable de données, est maintenant vue de manière plus constructive et non plus abordée uniquement en termes de véracité historique[1869]. Comme le dit Michel de Certeau :[1870]

> Il est impossible […] de ne considérer [l'hagiographie] qu'en fonction de l'« authenticité » ou de la « valeur historique » : ce serait soumettre un genre littéraire à la loi d'un autre – l'historiographie – et démanteler un type *propre* de discours pour n'en retenir que ce qu'il n'est pas. […] La combinaison des actes, des lieux et des thèmes indique une structure propre qui se réfère non pas essentiellement à « ce qui s'est passé », comme le fait l'histoire, mais à « ce qui est exemplaire ».

Ainsi, la biographie n'est pas un genre à rejeter car les acteurs (les biographiés et les biographes) nous renseignent sur la société dans laquelle ils évoluent, et l'hagiographie, particulièrement dans un monde religieux comme l'était le Tibet, nous éclaire sur les réseaux et les forces sociales qui structuraient l'histoire culturelle tibétaine.

Sources utilisées

Les Rosaires

Les textes principaux dans cette étude sont deux « rosaires », ST1[1871] et ST2[1872], composés au sein du lignage rNgog. Le terme « rosaire » ne désigne pas un genre littéraire à proprement parler mais un type d'écrit hagiographique s'étant développé au Tibet. Le mot tibétain, *phreng ba*, désigne une série ou une succession de choses ; une ligne d'écriture par exemple (*yig phreng*) est une série de lettres (*yi ge*). Le mot désigne également un *mala*, ou rosaire, c'est-à-dire une série de perles enfilées sur une cordelette. C'est cet usage qui dans un cadre hagiographique désigne une collection d'histoires de vie des saints successifs d'un lignage. L'idée véhiculée est que la bénédiction de l'éveil (le fil) relie toutes les perles (les maîtres), qui sont généralement faites de métaux ou de pierres précieux. On parle donc pour une série de biographies d'un « rosaire d'or » ou, comme c'est le cas ici, d'un « rosaire d'ornements précieux » ou d'un « rosaire de joyaux ». Il existe différents types de rosaires. Ils sont parfois constitués de biographies distinctes plus ou moins longues. Ici, les *Rosaires* présentent le lignage rNgog de manière globale : après une introduction générale est narrée la vie de Mar pa, l'identité des ancêtres de rNgog, les lignages religieux de chacune de leurs transmissions et la biographie de chacun des rNgog avec quelques allers et retours. ST1 et ST2 se concluent par plusieurs sections énumérant les traductions utilisées pour les transmissions rNgog, les œuvres

---

[1868] Dosse 2005.

[1869] Voir Tucci 1949, 151, pour la façon dont le *rnam thar* était considéré de manière générale, et par exemple Philippart 1994, 9, pour une présentation de la façon dont l'hagiographie est maintenant considérée.

[1870] Certeau 2011, 317 ; Dosse 2005, 150-151.

[1871] LGNT, 22 : 1-24 ; NKSB, 1 : 1-34.

[1872] LGNT, 22 : 25-50 ; NKSB, 1 : 35-68.

composées par chaque membre du lignage, leur année de naissance et l'âge auquel ils sont morts et enfin leurs disciples. Ce style, modifié dans les textes plus tardifs afin de rassembler les données propres à chaque individu, insiste ainsi sur le concept de lignage plutôt que sur les individus.

ST1 fut composé en 1360 par dPal gyi rdo rje. Il n'appartenait pas à la famille rNgog mais était un disciple proche, connu notamment pour avoir composé un rituel de *Dud sol ma*. Le manuscrit utilisé pour cette étude fut recopié par un Punyaśrī (bSod nams dpal) lors d'une année du tigre, pendant un enseignement de Byang chub dpal (1360-1446). Le colophon de ST2 ne donne pas de date mais indique que l'auteur est Byang chub dpal (Bodhiśrī) et que le texte est un prolongement de ST1. En effet, ST1 est globalement répété sur l'ensemble de ST2, avec une à deux générations supplémentaires à la fin de chaque lignage. ST2 fut probablement rédigé à la fin de la vie de Byang chub dpal : son petit-fils, qui était abbé en 1476, est mentionné, et son fils bKra shis dpal grub est appelé *rin po che*, ce qui indique qu'il était alors abbé du monastère (il le fut à partir de 1426). S'il fut composé lors de l'année du tigre durant laquelle ST1 fut recopié, cela pourrait être en 1434. Un troisième texte, selon toute vraisemblance également rédigé dans le lignage rNgog (appelé ST3 dans cette étude)[1873], fut composé entre ST1 et ST2, à la fin des années 1420. La forme est différente de celle de ST1 car il rassemble toutes les informations se rapportant à chaque membre du lignage et n'est pas appelé « rosaire ». Les lignages sont plus longs que ceux de ST1, et certains personnages mentionnés dans ST2 ne le sont pas dans ST3. ST2 contient des additions présentes dans ST3. Ainsi, parmi les trois textes rNgog utilisés dans cette étude, le plus ancien est ST1, suivi de ST3, et de ST2. ST1 et ST2 sont très proches, et ils font donc l'objet d'une édition et traduction combinée dans l'appendice 1 de cette thèse.

Les *Rosaires* décrivent la vie d'individus (les rNgog) ayant eu un rôle moins important dans les représentations des bouddhistes tibétains que des fondateurs de lignage comme Mar pa, sGam po pa, Tsong kha pa ou d'autres. Alors que ces derniers maîtres étaient des modèles à imiter pour des générations de disciples et faisaient donc l'objet de quantité de descriptions, les récits sur le rNgog sont moins hyperboliques et se trouvent au croisement de plusieurs genres littéraire comme la biographie, la généalogie et le recueil d'enseignements reçus. Les informations principales fournies par ces textes sont l'identité de chaque membre du lignage familial, leur responsabilité vis-à-vis des transmissions religieuses, les enseignements reçus, le nom de leurs maîtres et de leurs disciples, leurs compositions et leur date de naissance. Ce type d'information généralement fourni par les généalogies et les recueils d'enseignements reçus suggère que les *Rosaires* étaient principalement des documents internes au lignage religieux et familial rNgog destinés à informer descendants et disciples de l'origine des enseignements qu'ils recevaient. On y trouve également des détails de nature plus hagiographique, indiquant qu'ils ne servaient pas uniquement à créer une meilleure compréhension du lignage mais étaient également une source d'inspiration, étayant la légitimité et l'autorité des rNgog par le prestige du lignage plutôt que le charisme personnel.

[1873] NKSB, 1 : 69-90.

Ainsi, les *Rosaires* étaient des déclarations d'identité distinguant les rNgog des autres lignages, et les désignant particulièrement comme les détenteurs légitimes des enseignements de Mar pa. Ils furent composés à une période (les XIVe et XVe siècles) lors de laquelle lignages et ordres avaient proliféré et devenaient de plus en plus sectaires, dans un lieu, le Tibet Central, qui était le cœur politique du Tibet et dans lequel les lignages se livraient une compétition croissante pour jouir du patronage des mécènes et seigneurs.

Histoires religieuses

Un genre historiographique tibétain très répandu est l'« histoire religieuse » (*chos 'byung*). Ce genre propose une approche plus globale de l'histoire des traditions religieuses et du bouddhisme en général. Cinq histoires religieuses détaillent particulièrement l'histoire du lignage rNgog. Le plus ancien est le *Deb ther dmar po* (1346) de 'Tshal pa Kun dga' rdo rje (1309-1364), rédigé avant ST1. Bien que la partie sur les rNgog soit relativement brève[1874], il contient des informations absentes des *Rosaires*, notamment en ce qui concerne la fondation des bâtiments et temples de gZhung. La connaissance spécifique qu'a l'auteur des rNgog s'explique par le fait que rNgog Rin chen bzang po (1243-1319) enseigna au monastère et dans le centre de retraite de 'Tshal Gung thang dont l'auteur était originaire.

En 1446, l'année de la mort de rNgog Byang chub dpal, rTag tshag Tshe dbang rgyal (1400 ? - 1470 ?) compila le *lHo rong chos 'byung*[1875]. Tshe dbang rgyal avait été élevé à Ri bo che au Khams, où deux maîtres rNgog, Kun dga' rdo rje (1145-1222) et Chos kyi rgyal mtshan (1283-1359) avaient enseigné. Sa source probable est ST3, avec l'addition notable d'une courte biographie de Byang chub dpal, et surtout d'une datation plus exacte de chaque membre du lignage.

En 1476 fut composé le chef d'œuvre de 'Gos Lo tsa ba gZhon nu dpal (1392-1481), le *Deb ther sngon po*, qui est depuis sa création l'une des sources principales de connaissance des rNgog (et de beaucoup d'autres traditions). Ses sources d'inspiration sont le *Deb ther dmar po*, l'un des deux rosaires, et la relation personnelle de maître à disciple unissant 'Gos Lo tsa ba et rNgog Byang chub dpal. Une différence majeure avec le *lHo rong chos 'byung* est que les dates choisies se situent généralement un cycle de douze ans plus tard.

Enfin, deux autres histoires furent composées au XVIe siècle, alors que la famille rNgog était en train de péricliter à gZhung. La première est le *mKhas pa'i dga'* ston, écrite entre 1545 et 1565 par le Second dPa' bo, gTsug lag phreng ba, un disciple du 4e Zhwa dmar qui fut particulièrement important dans la diffusion du lignage rNgog. Au moins l'un des rosaires figure parmi ses sources, et sans doute la plupart des histoires précédentes. Le dernier récit substantiel sur les rNgog, composé en 1575, est celui du IVe 'Brug chen, Padma dkar po (1527-1592), un détenteur important des traditions rNgog. Il est fondé principalement sur le *Deb ther sngon po* et le *mKhas pa'i dga' ston.*

[1874] *Deb dmar*, 63-66.

[1875] *lHo rong chos 'byung*, 50-65.

*Recueils d'enseignements reçus (*gsan yig*)*

Les recueils d'enseignements reçus sont des textes décrivant les transmissions religieuses reçues par un individu ainsi que le lignage ayant véhiculé cet enseignement jusqu'à lui. Plusieurs de ces textes sont utilisés dans la présente étude afin de retracer notamment les réseaux de maîtres et de disciples ayant transmis le corpus rNgog, notamment les recueils établis par Bu ston Rin chen grub (1290-1364), Ngor chen Kun dga' bzang po (1382-1452), Gong dkar ba Kun dga' rnam rgyal (1432-1496), le IVe Zhwa dmar Chos grags ye shes (1453-1524) et le Ve Dalaï-Lama Ngag dbang blo bzang rgya mtsho (1617-1682).

Textes tantriques

En plus de ces récits historiographies de genres variés, il existe une grande quantité de textes tantriques – exégèses, instructions, rituels d'initiation et de pratique – se rapportant aux traditions codifiées par les rNgog. Deux collections constituent le corpus principal de cette étude, la *Compilation des textes rNgog* (*rngog chos skor phyogs bsgrigs*) et le *Trésor des mantras bKa' brgyud* (*bKa' brgyud sngags mdzod*).

Le premier groupe a été révélé très récemment par la publication en 2010 du *rNgog chos skor phyogs bsgrigs* (NKCK, 10 vols.), un facsimilé en noir et blanc de manuscrits en écriture cursive, et en 2013 du *rNgog slob brgyud dang bcas pa'i gsung 'bum* (NKSB, 34 vols.), une réédition informatisée en format livre. 98% des textes du NKCK et 63% de ceux du NKSB viennent de la Chapelle des Seize Arhats (gNas bcu lha khang), une bibliothèque dans le monastère dGe lugs pa de 'Bras spungs (près de lHa sa). Cette « bibliothèque » était en fait une réserve de livres entreposés derrière une fausse paroi depuis leur saisie lors des batailles engagées à l'époque du Ve Dalaï-Lama, lors de l'avènement du dGa' ldan pho brang (1642) et dans les décennies qui ont suivi. Les bibliothèques des monastères saisis et convertis ne furent pas détruites, mais leur contenu entreposé dans cette chapelle qui tient son nom des statues des seize arhats venant d'un de ces monastères, rTse lha sgang dans le Kong po. Parmi ces monastères se trouvaient un grand nombre d'institutions liées aux bKa' brgyud pa, et les textes de la tradition rNgog viennent probablement de plusieurs d'entre eux. Les textes inclus dans le NKCK couvrent l'ensemble des traditions rNgog ainsi que d'autres traditions exégétiques venant de Mar pa, comme celle de *Hevajra* passant par Mes ston et celle de *Guhyasāmaja* passant par mTshur ston. Les textes de la tradition rNgog sont principalement composés par rNgog mDo sde et plusieurs de ses disciples, dont son fils Thogs med grags et ses disciples rTsags Darma rgyal po et 'Gar ston bKra shis dbang phyug. Le NKSB contient également des textes trouvés dans la Chapelle des Seize Arhats mais ne venant pas de Mar pa, ainsi que des textes rNgog venant d'autres collections.

L'une de ces collections est le *bKa' brgyud sngags mdzod* (KGND, 6 vols.) compilé en 1854 par Kong sprul blo gros mtha' yas (1813-1899). Dans cette somme que Kong sprul qualifie de Mar rngog, il rassemble les rituels et commentaires associés à treize tantras du yoga insurpassable ainsi que plusieurs autres transmissions et pratiques de protecteurs. Parmi ces traditions, la plupart viennent des rNgog et plusieurs des autres disciples de Mar pa. Bien que certains textes (essentiellement ceux liés à la divinité protectrice Dud sol ma) soient composés par les rNgog, la plupart sont l'œuvre des détenteurs de lignées extérieurs ou postérieurs au

lignage héréditaire rNgog (principalement Tāranātha) ou de Kong sprul lui-même, inspiré principalement par les écrits du IVe Zhwa dmar et de Tāranātha.

Ces deux collections ont été utilisées pour obtenir des informations sur l'histoire religieuse du lignage rNgog. Le catalogue du KGND composé par Kong sprul présente l'ensemble des traditions contenues dans la collection, avec leurs spécificités et leurs lignages respectifs, et a donc été utilisé pour aborder de manière synthétique l'ensemble des traductions rNgog et leur histoire d'un point de vue rétrospectif. Pour les besoins de cette thèse, certains passages de commentaires présentant des informations sur l'histoire de la transmission et des spécificités liées à la tradition rNgog ont été repérés. Les colophons enfin ont été systématiquement analysés afin d'établir la responsabilité de composition et d'édition, et éventuellement les informations sur l'histoire des rNgog et de gZhung. Aucun effort n'a été fait cependant pour décrire les traditions elles-mêmes ou ce qui les distinguait de ces mêmes traditions dans d'autres lignages.

Chapitre 2 : les traditions rNgog

Dans les *Rosaires*, les traditions rNgog sont appelées les « enseignements rNgog » (*rngog pa'i chos/chos skor*) ou les « enseignements paternels » (*pha chos*). Dans les recueils d'enseignements reçus ou les catalogues, elles sont généralement désignées par le vocable « traditions rNgog » (*rngog lugs*). Au XVe siècle, une nouvelle expression, extérieure à la famille, est apparue pour désigner ces traditions, les « sept maṇḍalas des rNgog » (*rngog dkyil bdun*). Cette expression apparaît pour la première fois dans la biographie de Lo chen bSod nams rgya mtsho (1424-1482) rédigée par Karma Phrin las (1456-1539) qui se trouve dans le *Deb ther sngon po* de 'Gos Lo tsā ba[1876]. La large dissémination de cet ouvrage a rendu cette expression omniprésente dans les descriptions postérieures des transmissions rNgog. Bien qu'il existe des débats sur les transmissions recouvertes par l'expression, les sept transmissions sont généralement considérées comme étant les suivantes :

1) Le maṇḍala des neuf divinités de *Hevajra* (*dgyes rdor lha dgu*) : Hevajra et huit *ḍākinī*s.
2) Le maṇḍala des quinze divinités de *Nairātmyā* (*bdag med ma lha mo bco lnga*) : Nairātmyā et quatorze *ḍākinī*s.
3) Le maṇḍala des quarante-neuf divinités de *Vajrapañjara* (*rdo rje gur rigs bsdus lha zhe dgu*) : cinq maṇḍalas associés aux cinq familles de bouddhas, constitués chacun de Hevajra et de huit *ḍākinī*s, et quatre gardiens des portes.
4) Le maṇḍala des soixante-dix-sept divinités de la forme masculine de *Catuṣpīṭha* (*gdan bzhi'am rnal 'byor nam mkha' lha mang*) : Yogāmbara entouré de soixante-seize *ḍākinī*s et *ḍāka*s.[1877]

[1876] *Deb sngon*, 948, 952 (x 2), 964, 966, 972.

[1877] On trouve parfois le nombre quatre-vingt-dix-sept (*go bdun*) ou l'expression « nombreuses divinités » (*lha mang*), indiquant la complexité du maṇḍala. Comme le montre la représentation dans Tachikawa 1991, 152-154, il n'y a que 77 divinités.

5) Le maṇḍala des treize divinités de la forme féminine de *Catuṣpīṭha* (*ye shes dbang phyug ma lha bcu gsum*) : Jñāneśvarī et douze *ḍākinī*s.
6) Le maṇḍala des cinq divinités de *Mahāmāyā* (*sgyu ma chen mo lha lnga*) : Sangs rgyas He ru ka et quatre *ḍākinī*s.
7) Le maṇḍala des cinquante-trois divinités de *Nāmasaṃgīti* selon la tradition *gSang ldan* (*'jam dpal mtshan brjod gsang ldan lugs*) : Mañjuśrī avec des bouddhas et bodhisattvas des familles Vajra, Ratna, Padma et Karma ainsi que des divinités d'offrande.

L'expression "maṇḍala" (*dkyil 'khor*) est une référence spécifique à la phase de création méditative de la divinité et de son palais (*bskyed rim*), mais les traditions désignées par ce terme contiennent en fait des instructions et textes rituels associés à toutes les phases des tantras du yoga insurpassable. Les deux premiers maṇḍalas sont associés au *Hevajratantra*, et le troisième au *Vajrapañjara*, un tantra explicatif du *Hevajratantra*. Les deux transmissions suivantes sont associées au *Catuṣpīthatantra*, la sixième au *Mahāmāyātantra* et la dernière au *Nāmasaṃgīti*. Des pratiques associées à la phase de perfection des tantras de *Hevajra*, *Catuṣpītha* et *Mahāmāyā* étaient également transmises dans le lignage rNgog. La plus représentative était un cycle appelé Mélange et Transfert (*bsre 'pho*), particulièrement lié au *Hevajratantra*.

Parmi les disciples de Mar pa, rNgog Chos rdor, Mes ston et mTshur ston sont considérés comme ayant reçu la « lignée exégétique » (*bshad brgyud*) et Mi la ras pa la « lignée de pratique » (*bsgrub brgyud*). La plupart des biographies déclarent que Chos rdor reçut ces enseignements de Mar pa après trois « abandons », c'est-à-dire l'offrande par trois fois d'une grande partie de ses possessions. Suite au premier abandon, il reçut *Hevajra* (les trois premiers maṇḍalas). Cette tradition est principalement fondée sur les instructions clés (*gdams ngag*) de Nāropa et de Maitripa ainsi que sur les interprétations indiennes de Saroruhavajra (*mTsho skyes rdo rje*) et Ḍombīheruka[1878]. Le second abandon lui permit d'obtenir le cycle de *Mahāmāyā* qui vient de la tradition indienne de Kukuripa, que Mar pa avait reçu de l'un de ses disciples, Śāntibhadra, ornementée par les instructions de Nāropa. La troisième donation enfin permit à Chos rdor d'obtenir la transmission des deux maṇḍalas de *Catuṣpītha*. Le premier, celui de Jñāneśvarī, est exposé dans le *Catuṣpīṭhatantra*, alors que le second, celui de Yogāmbara, est exposé dans le rituel d'initiation (*Maṇḍalopāyikā*)[1879].

Il existe plusieurs traditions et niveaux d'interprétation de la septième transmission, *Nāmasaṃgīti*. La tradition détenue par les rNgog, *gSang ldan*, est le seul des sept maṇḍalas ne venant pas de Mar pa. Comme de surcroit il n'appartient pas à la classe du yoga insurpassable mais à celle du yoga, certains ont considéré qu'il ne devrait pas faire partie des sept maṇḍalas, au profit de la transmission de *Dud sol ma* (*Dhūmāṅgārī*), considérée comme la divinité protectrice de la tradition rNgog. Comme, cependant, le cycle sur *Dud sol ma* n'est pas un maṇḍala mais une divinité protectrice initialement associée au *Catuṣpīthatantra*, Kong sprul considère que le *Nāmasaṃgīti*, que Mar pa reçut de Maitripa même si ce n'est pas la tradition véhiculée par rNgog, a sa place dans les sept maṇḍalas[1880]. La tradition *gSang ldan* de *Nāmasaṃgīti* vient principalement du commentaire de Vilāsavajra (*sgeg pa'i rdo rje*) et de textes afférents composés par son oncle Agrabodhi (*byang chub mchog*)[1881]. L'une des

[1878] Voir Sobisch 2008, Szantó 2015c.

[1879] Szantó 2008, 2012 et 2015b.

[1880] DL5 *thob yig*, 1 : 369a ; KGNDdkar chag, 36.

[1881] Tribe 1994, 1997 et 2016 ; Davidson 1981.

personnes ayant importé et traduit cette tradition au Tibet est Smṛtijñānakīrti, le paṇḍita indien ayant vécu du milieu du Xe siècle au début du XIe siècle et ayant passé de longues années au Tibet. rNgog Chos rdor reçut cette tradition de deux des disciples de Smṛtijñānakīrti, Bye ma lung pa Chos kyi seng ge et Khams pa Shes rab rdo rje, invitant même ce dernier pendant un an à gZhung.

Chapitre 3: Lignages

Usages du mot lignage

Cette thèse se veut l'étude du lignage rNgog, qui est à la fois familial et religieux. L'utilisation du mot « lignage » dans ce second contexte est répandu dans les études religieuses asiatiques, mais relativement neuf dans les religions occidentales, le mot étant généralement défini en Occident par son usage anthropologique. Alain Rey déclare ainsi que le mot « ligne », dérivé du latin *linea*, désigne un fil de lin, puis toute espèce de fil textile ou de corde et, par analogie, une ligne tracée ou géométrique. Jusqu'au XVIe siècle, le mot était utilisé pour l'ensemble des membres d'une même famille, avant de céder cette signification à ses dérivés « lignage » et « lignée ». Le mot « lignage » recouvre, avec une valeur collective, l'ensemble des parents d'une souche commune. Le mot « lignée » s'oppose à lignage en ce qu'il désigne seulement la descendance d'une personne ; il demeure vivant avec la valeur figurée de « descendance spirituelle » (en locution « dans la lignée de »), cette valeur figurée étant celle qui explique l'usage fait dans les religions asiatiques, par exemple « le lignage (ou la lignée) rNgog pa bka' brgyud »[1882].

Le mot tibétain correspondant, *brgyud pa*, désigne une « connexion ininterrompue de l'un à l'autre »[1883]. Il est utilisé dans un contexte religieux comme familial, avec la même distinction qu'en français entre l'orthographe *brgyud* désignant le lignage dans son ensemble et *rgyud* pour un segment de lignage, c'est-à-dire une lignée[1884].

Il convient de faire la distinction entre un groupe constitué d'un maître et de disciples réunis autour d'une transmission et le lignage qui découle de cette transmission lorsqu'elle est répliquée sur plusieurs générations[1885]. Lorsque l'un des disciples du groupe devient un maître et que le processus continue, la représentation commune d'une identité, un lignage particulier, peut apparaître. Le concept d'un lignage spécifique et de détenteurs spécifiques de ce lignage se concrétise, ce qui implique un processus de sélection qui ne garde qu'un ou deux individus à chaque génération. Un lignage (religieux, mais également familial)[1886] est ainsi un système arbitraire de représentations nourri par l'époque à laquelle il a été créé. Il vise à donner un

---

[1882] Rey 2001 (édition numérique).

[1883] *Tshig mdzod chen mo*, 630 : *bar ma chad par gcig nas gcig tu sbrel ba.*

[1884] L'usage tibétain de *brgyud* et *rgyud* n'est pas systématique, et on trouve parfois *brgyud* « lignage » au lieu de *rgyud* « lignée » (mais rarement le contraire).

[1885] Van Schaik 2016, 69.

[1886] Lévi-Strauss 1958, 61.

sentiment d'appartenance, un « esprit de famille » à ses membres, et à fournir des références ainsi que de la légitimité aux membres des autres lignages. Un lignage n'est donc pas qu'une succession de maîtres, mais la sélection des représentants d'une « marque », ici la « tradition rNgog ».

Différents types de lignages religieux se sont développés au Tibet, le plus classique étant le lignage de maître à disciple, ou « lignage d'enseignement » (*slob brgyud*). Un type particulier de lignage d'enseignement est un lignage héréditaire (*gdung brgyud* ou *mi brgyud*), dans lequel maître et disciple sont liés par des liens familiaux ; c'est le cas du lignage rNgog. Un autre type de lignage est le « lignage d'incarnation » (*sku brgyud*), qui n'est pas un lignage de transmission de connaissance de maître à disciple mais un lignage de transmission d'autorité d'une personne à sa réincarnation, avec une interruption temporaire entre les deux incarnations, comblée par des disciples de la première personne qui deviennent maîtres de la seconde. En ce qui concerne le lignage héréditaire, plusieurs types peuvent être distingués :

- Un lignage héréditaire dans lequel le lama principal n'est pas moine, par exemple les 'Khon du lignage Sa skya ;
- Un lignage héréditaire monastique, par exemple lorsque les abbés d'un monastère appartiennent à la famille dirigeant la région dans lequel le monastère est situé ;
- Un lignage héréditaire mixte, avec des moines et des laïcs, comme le lignage rNgog.

On peut noter une évolution historique allant vers plus de monachisme à partir du XIIIe siècle, et il est vraisemblable que ces trois situations découlent de différentes façons de s'adapter au capital symbolique croissant attaché au monachisme. Bien que les lignages héréditaires non monastiques aient abondé aux XIe et XIIe siècles, ils ont rapidement cédé la place à des lignages monastiques, héréditaires ou non. Ces lignages héréditaires ont à leur tour été progressivement remplacés par des lignages d'incarnation. Le modèle héréditaire a continué plus largement dans les lignages de statut social peu élevé (comme les *sngags pa* décrits dans Sihlé 2013) du fait de la moins grande priorité donnée à l'intégrité du lignage religieux.

Fusion du familial et du religieux dans les Rosaires

Ce qui distingue les rNgog des autres lignages est leur légitimité religieuse. Bien que le lignage rNgog soit clairement héréditaire, les *Rosaires* ne mentionnent jamais explicitement que leur pouvoir symbolique vient de leur « os » (*gdung*), c'est-à-dire de leur hérédité. Au contraire, l'os le plus souvent évoqué est celui de Mar pa, présent dans ses reliques. Il est en fait manifeste que par divers moyens les rNgog ont fusionné leur lignage familial avec celui de Mar pa afin de rajouter à leur descendance spirituelle, source primaire d'autorité sur les traditions qu'ils véhiculent, la légitimité d'une descendance héréditaire.

Le moyen le plus immédiatement perceptible est la structure même des *Rosaires*, qui constituent la déclaration d'identité laissée par les rNgog :

- Les deux textes commencent par la biographie de Mar pa, débutant par sa généalogie et s'interrompant après l'arrivée de Mar pa en Inde. C'est la présentation la plus extensive des ancêtres de Mar pa toutes biographies confondues.

- La généalogie des rNgog, du Ve au XIe siècle, est ensuite abordée, suivie d'une présentation succincte des membres du lignage rNgog à partir de Chos rdor et jusqu'à la date de composition des *Rosaires*. Le nom des femmes et de tous les enfants mâles est mentionné dans ST1.
- Vient ensuite l'énumération des lignages religieux, le principal étant celui de *Hevajra*.
- La partie centrale des textes est l'histoire de la vie de chacun des maîtres religieux significatifs de la famille rNgog.
- Plusieurs sections concluent la présentation : les traductions utilisées dans les traditions rNgog, les compositions significatives des religieux rNgog, l'année de naissance et l'âge auquel les membres de la famille rNgog sont morts, les disciples de chacun des religieux rNgog.

L'impression véhiculée par cette présentation est que Mar pa et les rNgog forment un même lignage, religieux certes, mais également familial, comme si les généalogies rNgog et Mar pa étaient les deux lignées de rNgog Chos rdor.

Un autre moyen renforçant cet effet est le nom donné au fils de Chos rdor, rNgog mDo sde. Le fils de Mar pa était lui aussi appelé mDo sde ; on trouve généralement le nom Darma mDo sde dans les biographies de Mar pa, mais les *Rosaires* ne le nomment que mDo sde et mentionnent qu'il est mort d'une chute de cheval après être allé à une fête. Ce peu d'importance est compensé par la déclaration faite par Mar pa à Chos rdor mentionnant qu'il est important que rNgog mDo sde reçoive de Mar pa ses transmissions car c'est du fait de cette rencontre que la transmission de Mar pa pourra prendre son essor.

Le troisième moyen pour fusionner les deux lignées est le recueil des reliques de Mar pa par rNgog mDo sde. mDo sde reçut de la *ḍākinī* Jo mo sgre mo et de la petite-fille de Mar pa les os (*gdung rus*) de Mar pa. En ce qui concerne les reliques offertes par cette dernière, elles furent accueillies en grande pompe à gZhung à la fin de la vie de mDo sde, lors d'un concile religieux où de nombreux religieux importants de l'époque furent conviés et la descendante de Mar pa installée à la place d'honneur. Ces reliques furent ensuite enchâssées dans un reliquaire qui demeura le cœur du siège rNgog jusqu'au XXe siècle. Dans l'histoire des rNgog, l'os qui a du pouvoir n'est donc pas « l'os » rNgog (leur lignée agnatique), mais l'os de Mar pa (ses reliques). Ainsi, par un moyen littéraire, une désignation et un recueil concret de reliques, les rNgog intégrèrent physiquement Mar pa dans leur fief, gZhung, et s'approprièrent ainsi son pouvoir symbolique.

Transmission de capital

Ainsi, bien que les rNgog aient formé un lignage héréditaire, il n'est pas caractérisé par l'absence de célibat et sa légitimité ne découle pas de la filiation mais des ancêtres religieux. Les raisons pour lesquelles le lignage héréditaire a primé mais n'est pas parvenu à se maintenir sur le long terme demeurent donc incertaines. Afin de suggérer quelques éléments de réponse, cette thèse prend en considération le fait que le rôle principal d'un lignage est la transmission de connaissances, de légitimité et de pouvoir, c'est-à-dire de différents types de capitaux qui ont un effet sur le monde social.

Le lignage est une forme de filiation. Les modes de filiation définissent la parenté des individus, et cette parenté conditionne l'héritage. Les biens hérités par filiation sont immatériels (le nom, le statut social) ou matériels (propriété immobilières et mobilières). Dans un lignage religieux, les biens hérités sont généralement immatériels (connaissances et pouvoir) mais également matériels (statuts ou articles religieux). Lorsque le lignage prend de l'ampleur, des biens de plus en plus concrets sont transmis, comme des monastères et des terres, des statuts et titres, un réseau de disciples et de mécènes, etc. Le modèle d'autorité du lignage se développe dans les périodes de décentralisation du pouvoir politique car en l'absence de régulations étatiques, les individus ont besoin de règles pour définir héritiers et héritage[1887]. La filiation telle qu'elle est définie dans les lignages familiaux ou claniques est l'une des façons des sociétés de répondre à cette nécessité. Les groupes religieux indiens ou tibétains se trouvant dans des circonstances similaires ont ainsi développé une façon analogue de réguler la façon dont les disciples héritaient des biens matériels et immatériels de leur maître.

Dans une perspective heuristique, je propose de remplacer le terme « bien » par celui de « capital ». Le capital est généralement compris comme étant économique, mais dans les sciences sociales, et particulièrement en sociologie, divers types de capital ont été conceptualisés pour rendre compte des différenciations du monde social et de la façon dont les agents dans les champs sociaux utilisent ces capitaux pour parvenir à une position dominante. Le sociologue français Pierre Bourdieu a ainsi proposé quatre espèces de capital : économique, culturel, social et symbolique[1888]. Il me semble que cette notion polymorphique permet de décrire les sociétés traditionnelles dans lesquelles le capital économique, bien qu'il ne soit pas absent, prédomine moins que dans les sociétés modernes différenciées. Les *Rosaires* et l'histoire des rNgog telle qu'on peut la reconstruire par d'autres sources sont donc analysés à la lumière de cette distinction afin d'éclairer certains aspects de la société tibétaine prémoderne et déterminer la position des rNgog dans le champ religieux du Tibet Central. Dans la mesure où la structure de la distribution du capital est le principe structurant d'un champ, l'étude des types de capital a été préférée à une étude de champ car, d'une part, il s'agit de comprendre le fonctionnement du champ religieux dans lequel évoluait les rNgog plutôt que ses limites, et d'autre part, parce qu'il n'est pour l'instant pas certain qu'il soit possible d'établir un tel champ, faute de données suffisantes sur l'ensemble des agents le constituant.

Les questions sous-jacentes de cette recherche sont les suivantes : pourquoi certains lignages dominent-t-ils le champ religieux ? Qu'est ce qui fait leur succès et pourquoi cessent-ils ? On répond souvent à ces questions avec des analyses wébériennes comme les différents types de domination (légale, traditionnelle et charismatique), des présentations idéal-typiques et la question de la légitimité. Il ne me semble pas, cependant, que l'examen de l'idéal-type de chacun des religieux rNgog soit très utile pour répondre à ces questions car ils occupent tous plus ou moins le même rôle. De plus, le charisme semble parfois la qualité la mieux partagée par les héros des hagiographies, et dire qu'untel est charismatique ne nous avance guère.

[1887] Gray 2013, 49.

[1888] Wacquant 2007, 268. Bourdieu n'a pas inventé la notion de capitaux différentiés (cf. la notion de capital humain développé dans les années 60 ; Bourdieu 2015, 248-249), et il a dans certains contextes parlé d'autres espèces de capital (littéraire, artistique, scolaire, politique, etc.), mais ces quatre espèces de capital sont les plus représentatives de sa pensée globale.

Aborder la question du point de vue du capital possédé aux différentes périodes permet au contraire de saisir l'évolution du lignage, de comparer la quantité et la qualité de capital possédé avec celui d'autres individus et d'autres lignages, et ainsi d'esquisser les positions successives des rNgog dans le champ religieux et comprendre pourquoi et comment certains agents ont une position dominante ou dominée. Même si la présentation faite dans cette thèse n'est qu'une ébauche d'une telle analyse, il est vraisemblable qu'une étude plus systématique des capitaux possédés par différents types d'agents à une période donnée pourrait permettre de délimiter un champ religieux et d'en comprendre les dynamiques.

Le capital économique, bien qu'il soit souvent euphémisé dans les écrits hagiographiques, occupait une place cruciale au Tibet, particulièrement dans le développement, le maintien et le renforcement des lignages religieux. Dans les biographies de Mar pa par exemple, nombre de ses actions sont motivées par l'acquisition de fonds, et plus particulièrement d'or, indispensable pour obtenir des enseignements et plus tard pour établir son domaine. Dans le cas des rNgog, et plus particulièrement de Chos rdor, les possessions peuvent être devinées par les offrandes faites à Mar pa, principalement des bien détenus par des éleveurs (bétail, tentes en poil de yak, chiens, pot à lait, etc.), qui dessinent un mode de vie rural. La quantité des possessions offertes suggère que Chos rdor appartenait à l'élite rurale locale. Il est vraisemblable que ses descendants aient maintenus le même mode de vie, même si la source de leur richesse semble être de plus en plus les offrandes des fidèles, plus particulièrement celles obtenues lors de tournées au Tibet Oriental.

Hormis les biens mobiliers, les autres biens que possédaient les rNgog étaient leurs champs et leurs maisons. La question de la maison étant relativement importante pour le Tibet[1889], l'analyse du capital économique des rNgog faite dans le chapitre I.3. est l'occasion d'une digression sur les maisons que les rNgog occupaient dans la vallée de gZhung entre le XIe et le XVIe siècles. Cette présentation a pour objectif de contribuer aux recherches plus larges menées sur l'anthropologie historique du Tibet. Les *Rosaires* ne contiennent que peu de données sur la résidence des branches de la famille rNgog, hormis quelques toponymes ; cela suggère l'existence possible d'un catalogue aujourd'hui perdu décrivant les possessions matérielles de la famille, et notamment leur temple principal, sPre'u zhing. En l'absence d'un tel document, l'examen de la généalogie décrite dans les *Rosaires*, des données contenues dans les autres histoires religieuses et des colophons permet cependant quelques hypothèses (voir le résumé du lignage familial proposé dans la seconde partie du présent résumé). Tout d'abord, on peut noter qu'à plusieurs occasions, le nom de certains enfants est donné sans aucun détail sur leur descendance, et qu'il n'y a que deux filles mentionnées dans l'ensemble de la généalogie. Parfois, des descendants nommés dans ST1 disparaissent de ST2. Il est donc évident que la généalogie n'est pas complète ; elle est le reflet d'une perspective religieuse. Cela dit, il semblerait que la famille rNgog suive un système d'héritage basé sur le lignage patrilinéaire mais intégrant des stratégies visant à maintenir la maison indivise tant que cela est possible. Parmi ces stratégies, la plus commune à partir du XIIe siècle est que certains enfants deviennent moines et prennent la responsabilité du monastère et du lignage religieux alors que d'autres reprennent la maison et continuent le lignage familial. Pour éviter les divisions de la maison, il

[1889] Voir Sihlé 2013, 85-89.

est vraisemblable qu'à plusieurs occasions la solution du mariage polyandrique ait été utilisée, avec un seul des frères qui continue officiellement la descendance. Cette situation est particulièrement visible dans la lignée rGyal tsha où on compte plusieurs enfants à chaque génération mais uniquement l'un d'entre eux continuant la lignée (alors même que le lignage familial semble prédominer sur le lignage héréditaire dans la mesure où les religieux principaux sont issus de la lignée gTsang tsha). Bien que cela puisse être expliqué par une sélection rétrospective responsable de l'élimination de certaines lignées alternatives, il est possible qu'il y ait eu des efforts pour garder l'unité de la maison, comme on peut le voir dans l'exemple des frères Ra mo et rDor seng, tous deux religieux reconnus. Bien que Ra mo soit présenté comme celui ayant contracté le mariage et engendré les enfants, rDor seng n'est pas déclaré moine et la succession ne s'est produite qu'après sa mort. Dans le cas rNgog, une nouvelle maison est créée dans deux cas : lorsqu'un homme a deux femmes (par exemple les branches gTsang tsha et rGyal tsha issues des deux femmes de rNgog mDo sde, la seconde seule étant sa femme légitime), ou lorsque plusieurs enfants deviennent des religieux significatifs (par exemple les frères Rin chen rgyal mtshan et Seng ge sgra, ou les cousins Don grub dpal et Sangs rgyas yon tan).

Le second type de capital défini par Bourdieu est le capital culturel, transformé pour les besoins de la présente analyse en **capital religieux**[1890]. D'après Bourdieu, le capital culturel est une hypothèse permettant de « rendre compte de l'inégalité des performances scolaires des enfants issus de différentes classes sociales en rapportant la « réussite scolaire » […] à la distribution du capital culturel entre les classes et les fractions de classe[1891] ». D'après Bourdieu, les ressources culturelles dont dispose un individu peuvent présenter trois formes :

- incorporées (savoir et savoir-faire, compétences, forme d'élocution, etc.) ;
- objectivées (possession d'objets culturels) ;
- institutionnalisées (titres et diplômes scolaires).

Le capital religieux incorporé est très valorisé par les bouddhistes tibétains. Les enseignements traditionnels insistent par exemple sur les entraînements à l'éthique, la méditation et la connaissance, et les virtuoses du champ religieux sont généralement ceux ayant passé de longues années à pratiquer l'étude, la réflexion et la méditation. Malgré l'insistance des biographies sur les dons naturels, la formation religieuse d'un individu et son expérience méditative constituent un passage obligé de ces récits. Le bien le plus important de la famille rNgog, et celui qui les distingue des autres « fournisseurs de connaissance », est l'enseignement reçu de Mar pa, que la plupart des religieux rNgog sont présentés comme ayant maitrisé très tôt, ce qui est l'avantage évident d'un lignage familial sur un lignage ordinaire de maître à disciple.

Comme le remarque Bourdieu cependant, « une compétence culturelle quelle qu'elle soit […] commence […] à fonctionner comme capital dans une certaine structure de distribution par rapport à un champ ; à supposer que tout le monde détienne [cette compétence], elle perdrait

---

[1890] Voir un précédent dans Verter 2003.

[1891] Bourdieu 1979, 3.

toute valeur et deviendrait comme l'écriture [dans une société alphabétisée][1892] ». En d'autres termes, si tout le monde dispose de la même qualité et quantité de capital culturel, il ne fonctionne plus comme capital et ne permet donc pas à son possesseur d'atteindre une position dominante. Dans cette optique, Chos rdor et mDo sde se distinguent des autres rNgog. Dans le cas du premier, les récits insistent sur sa capacité à transformer son capital économique en capital religieux en se fondant sur sa dévotion pour Mar pa, parvenant à la fin de sa vie à incarner le capital religieux ultime, la réalisation du mahāmudrā. Il a donc une trajectoire exceptionnelle unissant exégèse et expérience méditative, efficace pour le distinguer d'autres religieux. Le second est décrit comme un maître incarné, ce qui lui assure un certain capital symbolique et justifie sa virtuosité. mDo sde a de plus étudié avec Mar pa, son père et ses disciples, et possédait donc un capital religieux incorporé spécifique et valorisé. Ces spécificités expliquent pourquoi Chos rdor et mDo sde ont atteint une position dominante alors que leurs descendants, ayant un capital moins différencié et peut-être une moins grande incorporation de ce capital, étaient plus dominés.

Le capital religieux objectivé (écrits, manuscrits, bibliothèques, statues, objets religieux, reliques, temples, etc.) joue un rôle central dans l'acquisition de capital symbolique au Tibet, mais plusieurs de ces aspects ne sont que peu présents dans les *Rosaires*, vraisemblablement du fait de l'existence du catalogue (*dkar chag*) aujourd'hui disparu. Les reliques et reliquaires occupent cependant une place prépondérante, comme le font les manuscrits et collections. De ces descriptions, on peut conclure que les rNgog possédaient une quantité substantielle de capital religieux objectivé, notamment les reliques de Mar pa, mais pas suffisamment pour les distinguer des autres agents religieux de la période.

Il n'y avait pas, au XIe siècle au Tibet, de capital culturel institutionnalisé, et même si une organisation de la société selon des titres a été mise en place par les Mongols à partir du XIIIe siècle puis par les autres administrations, on n'en trouve pas trace dans les *Rosaires*. On y trouve cependant deux types de titres, désignant soit des catégories de religieux, soit le statut de membres du lignage familial. L'examen de ces titres révèle que les termes *ston pa* (enseignant) et *lo tsā ba* (traducteur) sont principalement utilisés au XIe et XIIe siècles et indiquent une fonction plutôt qu'un statut. Le terme *rin po che*, désignant un statut n'est utilisé qu'à partir du XIIIe siècle, et pour des maîtres contemporains ou récemment disparus. Dans les *Rosaires*, il désigne soit des enseignants importants (généralement détenteurs de lignage) soit le religieux rNgog responsable de l'ordre lors de la composition du texte (généralement l'abbé de sPre'u zhing). On trouve également des titres de fonction tels que *mkhan po* et d'autres plus personnalisés tels que *chos rje*, *rje btsun* ou *mnga' bdag*.

Les titres les plus fréquents et qui fournissent des informations sur l'organisation sociale du lignage rNgog sont ceux utilisés pour caractériser les membres du lignage familial (voir appendice 2). Un examen de ces titres révèle que le titre *slob dpon* n'est donné que lorsqu'un individu masculin atteint l'âge adulte. Le titre *bla ma* n'est donné qu'une fois par génération dans ST1, sauf à la dernière génération où Rin chen rgyal mtshan and Chos kyi rgyal mtshan sont tous deux distingués ainsi. Dans ST2, des individus de la lignée rGyal tsha sont distingués

[1892] Bourdieu 2016, 293.

par ce titre en même temps que ceux de la lignée gTsang tsha, et plusieurs individus d'une même fratrie peuvent être désignés de cette façon en même temps. Il est possible que cela vienne d'une inflation générale des titres dans ST2, compilé dans une période de plus grande politisation de la région des rNgog et de l'implication de Byang chub dpal avec des personnalités importantes de son époque, ainsi que d'une répartition plus égalitaire des titres aux différentes lignées rNgog. On peut remarquer enfin une différence dans l'utilisation de la sanskritisation des noms propres, presque systématique dans ST1 mais absente dans ST2, ce qui témoigne de la perte d'importance symbolique du sanskrit entre le XIVe et le XVe siècle.

La notion de **capital social** permet de « désigner les principes d'effets sociaux qui, bien qu'on les saisisse clairement au niveau des agents singuliers […] ne se laissent pas réduire à l'ensemble des propriétés individuelles possédées par un agent déterminé : ces effets […] sont particulièrement visibles dans tous les cas où différents individus obtiennent un rendement très inégal d'un capital (économique ou culturel) à peu près équivalent selon le degré auquel ils peuvent mobiliser par procuration le capital d'un groupe (famille, anciens élèves d'écoles d'« élites », club sélect, noblesse, etc.)[1893] ». Le capital social des rNgog prend différentes formes dans les récits sur les rNgog, que ce soit leur généalogie, leur nom ou leurs réseaux. En ce qui concerne le premier point, la légitimité des rNgog est construite par l'exposition de la grandeur de leurs ancêtres (descendus des cieux et serviteurs de l'empereur tibétain) et surtout le prestige de leurs prédécesseurs religieux, principalement Mar pa et Nāropa. Les reliques sont ainsi une transformation de capital social en capital religieux objectivé et capital symbolique, à une période à laquelle Mar pa n'était plus présent mais dont l'héritage était réclamé par une quantité croissante de lignées issues de Mi la ras pa et de sGam po pa.

Le nom rNgog ensuite est une marque immédiatement identifiable dans les histoires et commentaires religieux ; il est donc vraisemblable que le terme « rNgog », et plus encore « Mar rngog », était un capital social important susceptible de se traduire en un capital symbolique plus ou moins significatif selon les époques.

Les réseaux sociaux et religieux des rNgog sont très présents dans les sources (biographies, histoires religieuses et recueils d'enseignements reçus) utilisées pour cette étude, où différentes relations significatives apparaissent au fil du temps. Chos rdor avait deux types de maîtres : Mar pa, détenteur de plusieurs cycles de tantras du yoga insurpassable, et divers Tibétains de qui il reçut les tantras du yoga. Le capital social, culturel et symbolique, et par conséquent potentiellement économique, associé au yoga insurpassable était exceptionnel à cette époque de renaissance du bouddhisme au Tibet. Bien que la large diffusion de ces tantras ait amoindri leur efficacité en termes d'effets sociaux dans les siècles suivants, Chos rdor, comme Mar pa, les maitrisait suffisamment bien et tôt pour lui permettre d'atteindre une position dominante dans le champ religieux. Les tantras du yoga prévalaient lors de la première diffusion du bouddhisme et ont connu un important regain au début de la seconde diffusion car ils représentaient un lien avec l'Empire pour l'élite religieuse et sociale de cette période. Chos rdor et mDo sde participèrent tous deux à la diffusion de ces traditions et faisaient donc ainsi partie de l'élite conservatrice. mDo sde, pour sa part, établit des liens avec trois types de religieux :

[1893] Bourdieu 1980, 2.

son père et ses disciples, de qui il reçut les traditions de Mar pa ; les traducteurs ; et les détenteurs des tantras du yoga. A la fin de sa vie, il organisa un concile religieux lors duquel « trois-centre-soixante-deux amis spirituels protégés par un parasol » se rassemblèrent à gZhung. Ceci témoigne du capital social considérable dont il jouissait alors.

Les religieux rNgog plus tardifs (Ra mo, Kun dga' rdo rje jusqu'à Don grub dpal et Sangs rgyas yon tan) eurent tous des maîtres et des disciples plus ou moins prestigieux, mais ils ne possédaient pas le même type de capital, particulièrement social et donc symbolique, que Chos rdor et mDo sde, bien que leur influence s'étendît loin vers l'est et leur procurât des fonds importants permettant la construction de leur siège. Au contraire de la plupart des lignages religieux de l'époque cependant, ils ne s'implantèrent pas ailleurs que dans la vallée de gZhung, ce qui diminua fortement leur influence. De plus, ils s'adaptèrent aux évolutions du champ religieux en suivant une voie de plus en plus monastique et scolastique, établissant plus particulièrement des liens avec le séminaire et monastère de Zul phu.

Byang chub dpal fut celui dont le capital social fut le plus distinctif après Chos rdor et mDo sde. Lorsqu'il reprit la responsabilité de sPre'u zhing, ses possessions étaient médiocres et ses formes de capital religieux demeuraient au mieux équivalentes (parfois dégradées) à celles de ses prédécesseurs. De plus, il fut l'objet de critiques dans d'importants cercles du pouvoir ; son capital social était donc bas. En nouant des relations stratégiques cependant, notamment avec Tsong kha pa et ses disciples, puis 'Gos Lo tsā ba, plusieurs hiérarques bKa' brgyud et Sa skya et enfin le Seigneur Phag mo gru pa du Tibet Central, il parvint à regagner une position dominante dans le champ religieux et ainsi à rétablir les traditions rNgog parmi l'offre tantrique du XVe siècle.

A cette époque cependant, le Tibet changeait rapidement, tant politiquement que culturellement. L'un des changements importants était la domination progressive des lignages d'incarnation qui se distinguaient radicalement des lignages ordinaires de maîtres à disciples et des lignages religieux héréditaires[1894]. Malgré cette évolution, ce phénomène ne fut pas importé dans le lignage rNgog. Bien que Byang chub dpal soit parvenu à regagner une meilleure position dans le champ en renforçant son capital social, tirant ainsi de meilleurs résultats de son capital religieux, son système (sPre'u zhing et le lignage rNgog) ne s'est pas adapté, au contraire de nombreux autres de l'époque. Byang chub dpal, étant un agent habile (ayant un habitus qui correspondait au champ), participa à la sauvegarde de sa tradition sur le long terme en la transmettant à des religieux mieux dotés en capital que lui. Au crépuscule de sa vie, il désigna le second 'Brug chen, Kun dga' dpal 'byor, comme celui qui devait diriger ses funérailles et il lui transmit plusieurs articles religieux importants (les parures d'os de Nāropa qui sont encore aujourd'hui l'un des trésors de l'ordre 'Brug pa). Il donna aussi l'intégralité de sa transmission à 'Gos Lo tsā ba gZhon nu dpal, qui entretenait des liens avec le pouvoir central Phag mo gru pa, ainsi qu'à plusieurs hiérarques liés au pouvoir régional de la famille Yar rgyab. Ainsi, malgré le déclin du lignage rNgog, ses traditions furent intégrées dans plusieurs ordres et se maintinrent jusqu'à aujourd'hui.

[1894] Smith 2001, 81, et surtout maintenant Tuttle 2017, 40.

Le **capital symbolique** n'est pas une espèce de capital distincte, que l'on pourrait posséder séparément des trois autres, mais une accumulation d'une forme particulière de capital, correspondant à ce que l'on nomme honneur ou prestige, et que Weber appelait charisme[1895], fondé sur la connaissance et la reconnaissance[1896]. Il fonctionne parce que ceux qui le possèdent n'exercent pas une violence physique sur les dominés pour imposer leur vision du monde social mais une violence symbolique. Dans le champ religieux d'une société traditionnelle comme le Tibet prémoderne, le capital symbolique est dérivé des espèces de capital présentées précédemment, qui sont celles pertinentes à la position de rNgog, ou d'autres formes de ces capitaux favorisées par des agents dans d'autres positions. L'analyse du lignage rNgog montre que leur capital économique était moyen. Ils appartenaient sans doute à une élite rurale locale pouvant se permettre une certaine autarcie mais n'ayant jamais atteint la puissance de la famille 'Khon de Sa skya, par exemple. Bien que les rNgog aient voyagé au Tibet Central (dBus et gTsang) et Oriental (Khams), aient noué des liens avec d'autres monastères et avec de riches patrons, permettant ainsi la construction de sPre'u zhing, l'ordre ne s'étendit pas au-delà des confins de la vallée de gZhung. Leur capital symbolique était donc fondé sur un solide capital religieux, particulièrement développé par rNgog mDo sde. Le capital spécifique qui les distinguait des autres agents était leur connaissance incorporée de l'exégèse tantrique, objectivée dans les reliques de Mar pa et renforcée par la captation de son capital symbolique. Ce capital religieux produisait plus ou moins de pouvoir symbolique selon les relations nouées par les individus rNgog, et la distinction de leur capital religieux. Ils étaient les plus puissants et avaient le plus de succès lorsqu'ils étaient eux-mêmes, c'est-à-dire des détenteurs de l'enseignement de Mar pa et du *Nāmasaṃgīti*. Ce n'est qu'alors qu'ils pouvaient influencer le champ. Lorsqu'ils s'adaptaient à leur monde, en étudiant la voie des caractéristiques ou en construisant un monastère par exemple, ils étaient modelés par d'autres agents. Ils ne pouvaient alors que maintenir l'héritage, mais sans le faire fructifier. Le dernier religieux étant parvenu à avoir des effets visibles et durables sur le champ fut Byang chub dpal. Mais il fut également modelé par le capital des autres. De nombreux lignages, particulièrement héréditaires, périclitèrent à cette période. Le lignage de Byang chub dpal survécut, mais pas sa lignée héréditaire.

[1895] Bourdieu 2016a, 818 : « Ce que je suis en train d'expliciter sous le nom de capital symbolique, c'est ce que Weber appelait « charisme » […], cette sorte de grâce, dans tous les sens du terme, qui accompagne le pouvoir. »
[1896] Bourdieu 1987, 33.

Partie II : un lignage dans le temps

La deuxième partie de cette thèse est l'histoire du lignage rNgog, depuis les origines nébuleuses du lignage bka' brgyud en Inde et le passé mythique de la famille rNgog au Ve siècle jusqu'au stūpas en ruine et les murs rénovés de sPre'u zhing aujourd'hui, en passant par Mar pa, ses disciples, et surtout Chos rdor et sa descendance. Les sources sont principalement des historiographies tibétaines primaires et secondaires ainsi que la littérature secondaire moderne sur des sujets afférents. Le but de cette partie est de rassembler les données historiques existantes afin d'avoir une connaissance aussi complète que possible de la vie de chaque individu du lignage ainsi que de son réseau de maîtres et de disciples.

Le premier chapitre est une étude des ancêtres religieux des rNgog, Mar pa et ses maîtres indiens, ainsi que des autres disciples de Mar pa. Son but est d'ancrer le lignage rNgog dans le contexte plus large d'un mouvement religieux émergeant ayant bourgeonné en de nombreuses branches, le lignage bKa' brgyud, et de continuer les recherches entreprises dans mon étude de la tradition biographique de Mar pa (Ducher 2017). Le deuxième chapitre est le pendant familial du premier ; il présente les ancêtres des rNgog ainsi que les autres familles portant ce nom au début du IIe millénaire. Dans le troisième chapitre, le plus long de cette thèse, est présentée en détail l'histoire des rNgog telle qu'elle est racontée dans les *Rosaires*, avec les compléments de sources externes, en commençant par Chos rdor et son fils mDo sde et en poursuivant par l'exposition des religieux de la branche rGyal tsha puis ceux de la branche gTsang tsha. Le quatrième chapitre relate plus particulièrement la vie de Byang chub dpal en la replaçant dans le paysage politique et religieux du XVe siècle, et se fonde sur des sources extérieures au lignage rNgog. Le cinquième et dernier chapitre retrace la trajectoire des descendants de Byang chub dpal à travers les biographies de leurs disciples, et conclut sur l'histoire de la vallée de gZhung depuis l'extinction des rNgog jusqu'à nos jours.

Chapitre 1 : ancêtres religieux

La vie de Mar pa

La tradition biographique sur Mar pa remonte à trois sources majeures et trois sources mineures, ainsi que ses chants[1897]. Les divergences entre ces sources empêchent cependant de déterminer avec certitude quelle fut la vie de Mar pa. Le présent travail se voulant une synthèse des connaissances sur les rNgog, la vie de Mar pa est ici résumée de leur point de vue. Ce n'est donc pas *la* vérité sur la vie de Mar pa, à jamais inaccessible, qui est présentée ici, mais *une* vérité, filtrée par la lentille rNgog.

La première biographie fut sans doute celle du disciple de Mi la ras pa Ngam rdzong ston pa Byang chub rgyal po (11-12th c.)[1898], dont le récit est moins centré sur Nāropa que la plupart

[1897] Voir Ducher 2017 et particulièrement le schéma récapitulatif p. 44.

[1898] Mon rtse pa, 83-103. Voir Ducher 2017, 46-54 (étude), 241-273 (traduction diplomatique et traduction).

des autres biographies. Il contient plusieurs descriptions pittoresques des échanges ésotériques que Mar pa eut avec Jñānagarbha et Śantibhadra, et est largement inspiré par les chants de Mar pa. Le second texte est l'œuvre probable de rNgog mDo sde, résumée ci-après[1899]. La troisième biographie peut être attribuée à Mar ston Tshul khrims 'byung gnas[1900], l'un des trois disciples principaux de Khyung tshang pa, le disciple de Ras chung pa. Elle fut transmise oralement dans le lignage sNyan brgyud jusqu'à ce que Mar ston l'enseigne à ses disciples qui la couchèrent par écrit avec ses commentaires. Cette version, datant de la fin du XIIe siècle, s'appuie partiellement sur la version de mDo sde, avec une influence des chants plus réduite. C'est ce texte qui est la source principale du chef-d'œuvre de gTsang smyon He ru ka sur la vie de Mar pa publié en 1505[1901].

Plusieurs biographies tardives considèrent la tradition rNgog comme étant une source fiable sur la vie de Mar pa. Le *lHo rong chos 'byung* déclare par exemple s'appuyer principalement sur la « tradition rNgog[1902] ». dPa' bo gTsug lag phreng ba mentionne lui deux œuvres en particulier, le « *Lo rgyus the tshom gsal byed* de Zhe sdang rdo rje », c'est-à-dire rNgog mDo sde, et le *rNam thar rim bzhi* de « rNgog pa[1903] », c'est-à-dire rNgog Rin chen bzang po (1231-1307), mentionné dans les *Rosaires* mais demeurant introuvable[1904]. Cette biographie, sans doute très détaillée, est probablement la source de la vie de Mar pa ouvrant les *Rosaires.* Kaḥ thog Si tu se réfère également à ce texte, ainsi qu'au *Lo rgyus rin chen spungs pa* de rNgog Byang chub dpal ba, vraisemblablement ST2. Deux autres biographies de Mar pa composées par des rNgog ouvrent le premier volume du *lHo brag mar pa lo tsa'i gsung 'bum* (MPSB)[1905]. La première est un résumé de l'œuvre de mDo sde. La seconde, signée rNgog gZhung pa Chos kyi rdo rje, n'a pas joué un grand rôle dans la tradition et s'écarte de ce que les autres biographies considèrent comme la parole de Chos rdor ; l'attribution à Chos rdor est probablement erronée.

Dans les *Rosaires*, la vie de Mar pa commence par une présentation détaillée de ses ancêtres (voir schéma p. 161)[1906]. Le père de Mar pa s'appelait dBang phyug 'od zer et sa mère rGya mo 'od de (ou rGya mo blos) et Mar pa est né dans la vallée de sPe sar, dans le lHo brag[1907]. La question de ses dates de naissance et de mort sont très débattues dans les différentes versions. Comme pour la biographie de Mi la ras pa[1908], on peut considérer qu'il existe trois versions : 1000-1081 ; 1012-1097 ; et 1024-1107. La plupart des sources tardives (dont le *lHo rong chos 'byung*) préfèrent la première possibilité, et déclarent s'appuyer sur la « tradition rNgog » et

---

[1899] Ducher 2017, 54-63 (étude) et 275-294 (traduction).

[1900] KSTC, 149-162. Voir Ducher 2017, 69-83.

[1901] Tsangnyön 1982 pour la traduction.

[1902] *lHo rong chos 'byung*, 50.

[1903] Dpa' bo II, 4.

[1904] Ducher 2017, 55-56.

[1905] MPSB, 1 : 1-11 et 11-27.

[1906] Les sources de ces affirmations ne sont pas systématiquement reprises dans ce résumé.

[1907] Les sources divergent à ce sujet. C'est la version de dPa' bo gTsug lag phreng ba, originaire de la région et qui spécifie la version des rNgog.

[1908] Quintman 2015.

particulièrement la biographie par rNgog Rin chen bzang po. D'après ST2, Mar pa est mort dans sa quatre-vingt-neuvième année, une année du bœuf, alors que mDo sde allait vers ses huit ans, c'est-à-dire 1085 ou 1097, ce qui place sa naissance en 996 ou 1008[1909]. Le *lHo rong chos 'byung* considère que Mar pa naquit en 997 et décéda en 1085, déclarant aussi que la naissance pouvait être reculée de deux à cinq ans. Ainsi, d'après la tradition rNgog et plusieurs autres historiens plus tardifs, il semble raisonnable d'affirmer que Mar pa naquit aux environs de l'an mille et mourut en 1085 (ou en 1081 s'il est mort l'année de l'oiseau, comme l'affirment plusieurs biographies).

Dans sa jeunesse, Mar pa était très violent et indiscipliné ; ses parents l'envoyèrent donc au loin étudier le Dharma. C'est ainsi qu'il arriva dans l'ermitage de 'Brog mi Lo tsā ba à Myu gu lung, dans l'ouest du gTsang, alors que le traducteur et fondateur de l'ordre Sa skya revenait de ses séjours en Inde et au Népal. 'Brog mi donna peu de transmissions à Mar pa car ce dernier ne pouvait assurer financièrement de les recevoir, mais il lui apprit le sanskrit, lui fournit sa traduction du *Hevajratantra* et fit des prières pour lui, le conseillant sur les maîtres à rencontrer au Népal.

Mar pa partit ensuite pour la vallée de Katmandu au Népal, où il rencontra sPyi ther pa, « le Chauve », de qui il reçut *Catuṣpītha*. Il se lia aussi d'amitié avec un disciple de Nāropa, Paiṇḍapa, qui l'aida ensuite plusieurs fois lors de ses voyages en Inde. Mar pa lui offrit de l'or et se rendit à Vikramaṣīla, où Nāropa avait été l'un des quatre grands paṇḍitas. Il fit finalement la rencontre de Nāropa dans son ermitage à Pullahari.

Les *Rosaires* interrompent ici leur récit, renvoyant le lecteur à l'œuvre de rNgog Rin chen bzang po. Celle-ci n'étant pas disponible, la suite est résumée selon la biographie composée par mDo sde et complétée par la version de Mar ston. Mar pa resta six ans avec Nāropa et reçut de nombreuses transmissions. Il rencontra également d'autres maîtres, principalement Maitripa et Jñānagarbha. Mar pa rentra ensuite au Tibet où il demeura plusieurs années pour rassembler de l'or, notamment dans la mine d'or de Nam ra récemment découverte dans le nord du pays. Bien que cette partie ne soit pas détaillée dans l'œuvre de mDo sde, Mar ston raconte que c'est à cette époque de rNgog Chos rdor fit sa connaissance, alors que Mar pa était dans la région de gZhung ; dans les *Rosaires*, Chos rdor rencontre Mar pa dans le lHo brag, probablement après que ce dernier soit définitivement rentré d'Inde.

Suite à une vision de *ḍākinī*s décryptant pour lui une instruction de Nāropa, Mar pa repartit pour l'Inde et rencontra en chemin Atiśa, aux alentours de 1045-1046. D'après mDo sde, c'est à l'orée de ce second voyage que Mar pa rencontra gNyos Lo tsā ba[1910]. Cette relation n'est mentionnée dans aucun des autres écrits des rNgog, mais les autres biographies (Ngam rdzong et Mar ston) considèrent généralement que Mar pa voyagea avec gNyos lors du premier séjour, au terme duquel il perdit ses textes. Pour résoudre cette contradiction, on peut choisir de se détourner à ce stade de la version de mDo sde et de préférer celle de Mar ston, qui correspond

---

[1909] Les *Rosaires* ne précisent jamais l'élément des années ; en général, le *lHo rong chos 'byung* favorise une datation plus ancienne, et le *Deb ther sngon po* une datation plus récente. Dans la mesure où j'accepte généralement plutôt les dates du premier pour les rNgog, je préfère également une datation plus ancienne pour Mar pa.
[1910] Ducher 2017, 226-236.

mieux à la biographie de gNyos Lo tsā ba et est bien connue par le récit qu'en a fait gTsang smyon He ru ka. Une autre possibilité est de prendre en considération la question du nombre de voyages que fait Mar pa en Inde. Dans ses chants, Mar pa dit qu'il y en eut trois, mais Mar ston n'en décrit que deux. Dans ce deuxième cas, Mar pa ne peut donc rencontrer gNyos qu'au début du premier voyage. mDo sde, suivant les chants, parle de trois voyages. Durant le premier séjour de six ans, Mar pa étudia auprès de Nāropa. Au début du second voyage, il fit la rencontre d'Atiśa et accompagna gNyos jusqu'en Inde. En Inde cependant, il s'avéra que Nāropa s'engageait dans une conduite tantrique et n'enseignait plus. Mar pa reçut donc des transmissions d'autres maîtres, et rencontra Nāropa de manière épisodique. Selon les descriptions de Nag 'tsho Lo tsā ba (qui confirme la rencontre avec Atiśa), Nāropa était décédé ; dans les biographies de Mar pa, cet événement est décrit comme une conduite tantrique lors de laquelle le yogi s'abstient des relations ordinaires et peut donc être considéré comme mort au monde. A la fin de ce voyage, à cause de gNyos, Mar pa perdit ses textes, et les deux amis se séparèrent. Mar pa rentra brièvement au Tibet avant de repartir pour la dernière fois en Inde. Lors de cette pérégrination ésotérique, Mar pa partit en quête de Nāropa, dont il eut de nombreuses visions. Cette quête, décrite pour la première fois dans le récit de mDo sde, est sans doute la source des descriptions plus tardives qui rendent cet épisode bien connu. Cette version est appuyée par l'introduction autobiographique du *Sras mkhar ma* dans laquelle Mar pa décrit qu'il rentra une première fois au Tibet, fit une tournée dans le nord pour chercher de l'or et retourna en Inde faire des offrandes et recevoir des instructions. Il repartit alors au Tibet avec gNyos mais la route était coupée, et gNyos lui dit qu'il y avait des obstacles à son retour au Tibet. Les *ḍākinī*s enjoignirent aussi Mar pa à repartir en Inde et l'emmenèrent dans un palanquin jusqu'en Oddiyāna, où il reçut « la quintessence de l'esprit de Nāropa de Puṣpahari[1911]. »

Quoi qu'il en soit, lors de son dernier voyage en Inde, Mar pa pria avec tous ses maîtres, les questionna sur la possibilité de rencontrer Nāropa et tous prophétisèrent que la rencontre aurait lieu. Mar pa partit ensuite pour une quête solitaire émaillée de visions de Nāropa. Après de nombreuses épreuves, Nāropa apparut. Mar pa, extatique, lui fit l'offrande d'un maṇḍala d'or, mais Nāropa refusa, avant de finalement accepter en éparpillant l'or durement rassemblé dans les airs. Mar pa fut choqué, mais Nāropa rematérialisa l'or et transforma l'environnement en or. Comme il n'enseignait toujours pas, Mar pa continua de fréquenter ses autres maîtres, tout en ayant des visions de Nāropa. Finalement, maître et disciple se rendirent ensemble à Pullahari, où ils furent attaqués par des *ḍākinī*s et sauvés par une apparition de Tilopa. Mar pa reçut enfin en secret la transmission de Nāropa pendant sept mois. Nāropa prédit à Mar pa que son lignage familial disparaîtrait comme une fleur céleste mais que son lignage religieux serait ininterrompu comme le flot d'une rivière et que ses disciples parviendraient à Khecara pendant treize générations. Nāropa entra alors définitivement dans la pratique, et Mar pa revint au Tibet, faisant des prières avec ses maîtres newars en chemin. Les récits des rNgog sont peu diserts sur la fin de la vie de Mar pa au Tibet, si ce n'est qu'il fit plusieurs fois « l'entrée dans le corps d'un autre » (*grong 'jug*). D'après la version de Chos rdor, c'est à cette période qu'il se maria

[1911] *Phyag chen rgya gzhung*, 105-108.

et eut des enfants, et les *Rosaires* considèrent que c'est à cette période que Chos rdor le rencontra et reçut sa transmission, particulièrement dans les dernières années de sa vie.

Les maîtres de Mar pa

Les biographies affirment que Mar pa rencontra de nombreux maîtres au Népal et en Inde, mais les sources divergent beaucoup, et les écrits des rNgog ne sont pas les plus loquaces à ce propos. On considère généralement (par exemple dans le *lHo rong chos 'byung*, 32) qu'il eut cent-huit maîtres qui étaient des yogis, cinquante détenteurs de traditions exégétiques et treize accomplis capables de changer les apparences. Parmi eux se trouvaient quatre noble gurus, Nāropa, Maitripa, Śāntibhadra et Jñānagarbha, dont deux étaient inégalés, Nāropa et Maitripa. Les deux premiers nombres, cent-huit et cinquante, évoquent l'idée que Mar pa eut de nombreux maîtres inconnus, yogis et érudits. Le nombre treize vient des chants de Mar pa, mais il n'y a pas de consensus sur leur identité. Les quatre maîtres ainsi que la *yoginī* sont généralement reconnus par tous les récits.

Nāropa et l'origine du lignage bKa' brgyud

Nāropa occupe une place prépondérante dans la formation de Mar pa, et, dans les *Rosaires*, toutes ses transmissions, sauf celle de *Mahāmāyā* qui remonte à Śāntibhadra, viennent de lui. La vie de Nāropa, encore plus que celle de Mar pa ou de Mi la ras pa, est auréolée d'un halo de légendes, mais on peut ici encore la présenter selon la tradition rNgog[1912]. On considère généralement qu'il serait né vers 956, et l'année de sa mort (ou de son entrée dans la pratique tantrique) est plus sûrement placée en 1040[1913]. Il serait né au Cachemire et serait le frère de Niguma[1914]. Dans sa jeunesse, il étudia avec de nombreux paṇḍitas et fut marié avec une femme nommée Vimala. Il devint ensuite moine puis l'un des érudits gardiens des portes de Vikramaśila. Un jour, une vieille femme vint défier sa connaissance et lui parla de son frère avant de disparaître. Nāropa partit alors en quête de Tilopa et subit de longues épreuves qui, comme la quête de Mar pa, devinrent des figures récurrentes de l'hagiographie bKa' brgyud. Ses tribulations commencèrent au niveau extérieur puis continuèrent au niveau intérieur, secret et essentiel. Ses douze premières épreuves mineures (extérieures) le menèrent à Tilopa. Tilopa le soumit ensuite à des épreuves intérieures lui permettant de progresser sur le chemin de la maturation (*smin lam*) jusqu'à la quatrième initiation, puis à douze épreuves majeures l'aidant à progresser sur le chemin de la libération (*grol lam*). Au niveau secret, il enflamma la lampe de la félicité et la lampe immaculée, complétant ainsi son ascèse par la réalisation du mahāmudrā. L'ascèse essentielle (*de kho na nyid*) fut la pratique tantrique (*caryā*) à travers laquelle il paracheva son entraînement. Il actualisa alors le fruit et reçut de son guru la prophétie de l'éveil.

[1912] « rJe btsun nā ro pa chen po'i rnam thar ». In DK-DZO, 5 : 130-159.

[1913] Wylie 1984, Harding 2010, Ducher 2017, 224-225.

[1914] Harding 2010, 1-6.

Les enseignements sur les phases de création et de perfection des tantras du yoga insurpassable que Nāropa reçut de Tilopa venaient des « quatre descentes d'instruction » (*bka' babs bzhi*, plus simplement traduit par les « quatre lignages »), autre thème récurrent de l'historiographie bKa' brgyud. L'étymologie de cette expression est parfois donnée comme le « lignage des quatre descentes d'instruction » (***bka'*** *babs bzhi'i* ***brgyud*** *pa*). Malgré l'omniprésence de cette expression, il existe autant de versions des quatre lignages que de textes les présentant. Cette thèse propose un état des lieux de la question en s'appuyant sur les sources secondaires occidentales et sur la comparaison de plusieurs sources tibétaines (principalement celles issues du lignage rNgog), avant de considérer les *bKa' babs bzhi* comme un trope représentatif de l'élaboration d'une identité bKa' brgyud naissante.

Tilopa est généralement présenté comme ayant quatre maîtres humains, Cāryapa, Nāgārjuna, Lavapa et Sukkhasiddhī, également nommée Kalpabhadrī (*skal pa bzang mo*), de qui il reçut différents tantras du yoga insurpassable ainsi que les enseignements sur les phases de perfection de ces tantras, plus tard connus sous le vocable des « six doctrines de Nāropa » (*nā ro chos drug*). Les sources se contredisent sur les transmissions reçues de chacun de ces maîtres, et les différentes versions sont difficilement conciliables[1915].

Pour expliquer ces différences, il faut d'abord reconnaître qu'il y a plusieurs niveaux de transmission. Les quatre lignages sont le niveau extérieur ou relatif, également nommé « lignage de la transmission et de l'expérience » (*bka' babs nyams kyi brgyud pa*)[1916] : pendant la première partie de sa vie, Tilopa a rencontré des maîtres humains. Il mit ensuite leurs instructions en pratique lors d'une longue retraite au terme de laquelle il reçut de nouveau les transmissions de Vajradhara, c'est-à-dire qu'il en réalisa le sens. C'est pourquoi Tilopa lui-même déclare que son maître est en fait l'omniscience. Cela constitue la transmission véritable ou ultime, également appelée « lignage de la réalisation et de la bénédiction » (*rtogs pa byin brlabs kyi brgyud pa*)[1917] ou « lignage proche » (*nye brgyud*).

Le « lignage de la transmission et de l'expérience », c'est-à-dire le lignage long (*ring brgyud*), est divisé en deux branches :

- la tradition de transmission des tantras et instructions clés individuelles (*rgyud dang man ngag so so'i bka' babs lugs*), aussi nommé le « lignage non-combiné » (*thun mongs ma yin pa'i bka' babs*) ;
- la tradition qui mélange les instructions clés des quatre lignages dans la compilation du Mélange et Transfert (*bka' babs bzhi'i man ngag bsre 'pho 'tshams sbyor du dril ba'i lugs*), aussi nommé le « lignage combiné » (*thun mongs kyi bka' babs*).

[1915] Voir par exemple Torricelli 1993b et 1998.

[1916] « bKa' babs bzhi dang tai lo pa'i rnam thar ». In DK-DZO, 5 : 9-10.

[1917] *Idem*, 9.

Cette distinction indique qu'il n'y a pas une mais deux séries de quatre transmissions. Les quatre maîtres mentionnés plus haut sont les destinataires finals des **transmissions non-combinées**, généralement indiquées comme suit[1918] :

- Transmission du tantra *mahāyoga* (*pha rgyud*) de *Guhyasamāja* et du *Pañcakrama*, du *Catuṣpīṭhatantra* et des instructions sur le transfert (*'pho ba*), l'entrée dans le corps d'un autre, etc. : Vajradhara → Indrabhūti l'Ancien → Nāgayoginī (*klu las gyur pa'i rnal 'byor ma*) → Roi Viśukalpa (*bhi su kalpa*) → Saraha le Grand → Nāgārjuna → **Mātaṅgī**.
- Transmission du *Mahāmāyātantra* et des instructions sur les trois yogas : Vajradhara → Jñānaḍākinī → Kukūripa → **Cāryapa**.
- Transmission des Six Doctrines s'appuyant sur l'infinité des *mahāyoga* et des *yoginītantras* : Vajradhara → Vajrapāṇi → Ḍombīheruka → Bināpavajra → **Lavapa**.
- Transmission des Six Doctrines qui s'appuient sur le *Hevajratantra* : Vajradhara → Vajrapāṇi → Anaṅgavajra (*yan lag med pa'i rdo rje*) → Padmavajra → **Ḍākinī Kalpabhadrī**.

Les lignées de qui Tilopa reçut les transmissions combinées sont les suivantes[1919] :

- Lignée du *Pañcakrama* et de l'entrée dans le corps d'un autre : Vajradhara → Ratnamati →Nāgārjuna → **Mātaṅgī**.
- Lignée du mahāmudrā, etc. : Vajradhara →Vajrapāṇi →Saraha →Lūipa → **Ḍeṅgipa**.
- Lignée de la chaleur interne (*gtum mo*), etc. : Sumati Samantabhadrī → Thang lo pa → **Karṇaripa**.
- Lignée de la luminosité (*'od gsal*), du corps illusoire (*sgyu lus*), etc. : Ḍombi Heruka → Bināpa → Lavapa → **Indrabhūti** le Jeune.

Il y a donc deux séries de quatre lignées, avec dans chacune des variations dues aux textes sources eux-mêmes, pas toujours identifiables, et aux variations introduites par les exégètes tibétains. Deux des lignées de chacune des séries se recoupent, celles de Mātaṅgī et de Lavapa. Cela fait donc un total de six lignées longues reçues par Tilopa.

Ce qui précède indique que les *bka' babs bzhi* regroupent en fait de nombreux maîtres indiens ayant pratiqué et transmis les tantras qui formèrent le cœur de l'enseignement que Mar pa importa au Tibet. Les « quatre lignages » sont parfois six, sept, ou plus. C'est pourtant le chiffre quatre qui est resté, souvent associé aux quatre directions de l'Inde, ce qui suggère une interprétation symbolique de cette présentation, à savoir celle d'un personnage central (Tilopa) entouré de maîtres des quatre directions, renvoyant à la divinité centrale d'un maṇḍala avec ses quatre portes. Cette image a une double vocation : d'une part, elle « déifie » Tilopa, l'identifiant à un *yi dam* dans un champ pur (le maṇḍala) ; d'autre part, elle indique que sa transmission est complète, venant des quatre directions. Le chiffre quatre est d'ailleurs fréquent dans les représentations des débuts du lignage bKa' brgyud. Mar pa se considère ainsi destinataire des quatre lignages de l'Inde (Jñānagarbha à l'ouest, Śāntibhadra au sud, Maitripa à l'est et Nāropa

[1918] DK-DZO, 5 ; 10-11. Il existe d'autres versions, voir par exemple Torricelli 1993b, 195.
[1919] *Idem*, 11.

au nord)[1920]. De même, Nāropa est dit avoir quatre fils de cœur, Mar pa quatre disciples qui le réjouissent, également comparés à quatre piliers, etc.

Maitripa

Le deuxième guru inégalé de Mar pa fut Maitripa, de qui il reçut principalement le mahāmudrā et la transmission de *Nāmasaṃgīti* selon la perspective des tantras du yoga insurpassable[1921]. D'après une biographie sanskrite[1922], Maitripa venait d'une famille de brahmanes de l'Inde centrale. Bien que le manuscrit ne donne aucune date, des sources plus tardives indiquent qu'il naquit probablement en 983 ou 986. Il étudia d'abord auprès de Nāropa pendant une vingtaine d'années, puis avec plusieurs autres maîtres, et sous des noms successifs. Dans le sud de l'Inde, il rencontra le *siddha* Śabareśvara de qui il reçut le nom Advayavajra et auprès de qui il parvint à la réalisation du mahāmudrā. Après la disparition de Śabareśvara, Maitripa revint enseigner en Inde du Nord, probablement à la fin des années 1030.

Il est probable que Mar pa rencontra pour la première fois Maitripa avant qu'il ne suivît Śabareśvara, et alors que Maitripa était encore en lien avec Nāropa, c'est-à-dire dans les années 1020. Mar pa le fréquenta de nouveau lors des voyages suivants, dans les années 1040, dans le charnier de la Montagne brûlant comme du feu, dans l'est de l'Inde, généralement considérée comme proche du Gange. Maitripa induisit alors une profonde réalisation dans l'esprit de Mar pa et lui confirma qu'il rencontrerait Nāropa. D'après la biographie de Mar pa par Padma dkar po, Maitripa avait une consorte nommée Epi de bananier (*chu shing gi nye ma can*). Dès son premier voyage, Mar pa reçut d'elle *Nāmasaṃgīti* et *Catuṣpīṭha*. Maitripa quitta son corps en 1060 ou 1063.

Śāntibhadra (Zhi ba bzang po)

Śāntibhadra était un yogi spécialisé dans la pratique de *Mahāmāyā* vivant dans une île au milieu d'un lac aux eaux toxiques dans le sud de l'Inde. Le nom de Śāntibhadra est souvent associé à celui du *mahāsiddha* Kukuripa, et les deux noms coexistent dans certaines biographies de Mar pa, donnant parfois l'impression que Mar pa rencontra deux maîtres distincts. En fait, Kukuripa, généralement considéré comme vivant dans la région de Lumbini et de Kapilavastu, vécut plusieurs générations avant Śāntibhadra ; si Mar pa le rencontra, ce ne fut que de manière visionnaire. Les deux noms sont cependant associés car Kukuripa et Śāntibhadra étaient considérés comme des détenteurs majeurs (des *bdag po*) du lignage de *Mahāmāyā*, et Śāntibhadra est donc parfois nommé Kukuripa le Jeune (de même que Śabareśvara, le maître de Maitripa, est parfois nommé Saraha le Jeune). Leur mode de vie non-conventionnel est un autre facteur justifiant le rapprochement, Kukuripa comme Śāntibhadra vivant tous deux avec une consorte qui prenait l'apparence d'une chienne. Dans les biographies de Mar pa, le

---

[1920] Voir Tsangnyön 1982, 53-56, et Ducher 2017, 19-21.

[1921] Pour la vie de Maitripa, voir Tatz 1988@, Mathes 2015, 23-40.

[1922] Tatz 1988, Lévi 1931.

traducteur reçoit d'abord la transmission de *Mahāmāyā* de Nāropa ; celui-ci l'envoie ensuite étudier le tantra avec son détenteur, Śāntibhadra, malgré les difficultés pour atteindre l'île.

Jñānagarbha (Ye shes snying po)

Mar pa reçut de Jñānagarbha la transmission de *Guhyasamāja* et les instructions associées. Malgré son importance dans les biographies de Mar pa, Jñānagarbha est peu connu en Inde, où plusieurs gurus portent ce nom, dont le philosophe svatantrika-madhyamaka du VIIIe siècle ayant donné l'ordination monastique à Śāntarakṣita[1923]. Celui avec qui Mar pa étudia vécut au XIe siècle et faisait partie de la tradition des Nobles (Ārya) du *Guhyasamāja*. Il est généralement désigné par le vocable « paṇḍita Jñānagarbha ». D'après le KGND, son maître se nommait Vimalamati. Plusieurs textes sont attribués à Jñānagarbha dans le *bsTan 'gyur* mais il est probable que dans la plupart des cas il ne s'agisse pas du maître de Mar pa. Il y a par contre dans le *bKa' 'gyur* un texte sur *Guhyasamāja* que Mar pa traduisit avec Jñānagarbha[1924]. D'après la biographie par mDo sde, Mar pa étudia d'abord ce texte avec Nāropa (alors dans la conduite) puis le traduisit ensuite avec Jñānagarbha. La biographie la plus prolixe au sujet de la relation de Mar pa avec Jñānagarbha est celle de Ngam rdzong ston pa, qui considère que Jñānagarbha fut le premier maître indien rencontré par Mar pa dans l'ouest de l'Inde, à Lakśetra, où il demeura cinq ans. C'est là qu'il aurait rencontré Paiṇḍapa qui le mena ensuite jusqu'à Nāropa. Lorsque Mar pa rendit visite à Jñānagarbha lors de son troisième voyage, il vivait avec une femme de basse caste qui induisit une profonde réalisation de *Guhyasamāja* en Mar pa.

La yoginī

Bien qu'un chant de Mar pa associât les quatre directions aux quatre maîtres sus-nommés, de nombreuses biographies parlent de cinq gurus principaux, un chiffre dérivé d'un autre chant. Le cinquième maître est généralement identifié comme la *yoginī* de qui Mar pa reçoit *Catuṣpīṭha*. Elle est nommée Epi de Bananier (*chu shing gi nye ma can*), Parée d'Ornements d'Os (*rus pa'i rgyan can*), ou Parée d'Ornements d'Os Humains (*mi rus pa'i rgyan can*), et n'est pas décrite si ce n'est lors du séjour chez elle que fait Mar pa lors de sa quête de Nāropa. Son identité est indéfinie, et les biographies divergent à son sujet. De nombreuses rencontres avec des *yoginī*s et *ḍākinī*s sont cependant mentionnées dans les biographies et ces femmes jouent un grand rôle dans l'évolution spirituelle de Mar pa.

Les disciples de Mar pa : les quatre piliers et leurs lignées

Bien que Mar pa eût de nombreux disciples, un groupement répandu est celui des « quatre piliers » (*ka chen bzhi*), une image issue de la tradition biographique de Mi la ras pa. Un autre, plus fréquent dans la tradition biographique de Mar pa, est celui des quatre « fils de cœur »

[1923] Eckel 1987 ; BA, 34.

[1924] Tôh 453.

(*thugs kyi sras*) ou, comme dans les *Rosaires*, des quatre « disciples qui le réjouissent » (*mnyes pa'i bu*) :

- rNgog ston Chos rdor de gZhung est associé au sud et réjouit Mar pa avec sa sagesse ;
- mTshur ston dBang nge de Dol est associé à l'est et réjouit Mar pa avec sa magie ;
- Mes ston de rTsang rong est associé à l'ouest et réjouit Mar pa avec son service.
- Mi la ras pa est associé au nord et réjouit Mar pa avec sa dévotion.

L'héritage que leur transmit Mar pa est présenté de manière paradigmatique dans la biographie de Mi la ras pa composée par gTsang smyon He ru ka[1925]. rNgog Chos rdor y joue un rôle particulier car Mi la ras pa passe un an à gZhung lorsque Mar pa ne lui enseigne pas.

mTshur ston dbang nge

mTshur ston dbang nge (écrit aussi 'Tshur ston) venait de la vallée de Dol voisine de celle de gZhung. Il apprit la magie avec son père, et Mar pa lui demanda de tuer pour lui son cousin Mar pa Mon nag. Il reçut principalement de Mar pa les transmissions de *Guhyasamāja* et de *Buddhakapāla* ainsi que la pratique de l'éjection (*'pho ba*). *Guhyasamāja* ne faisant pas partie des transmissions reçues par rNgog, c'est mTshur ston qui fut le principal récipiendaire de ce tantra important pour Mar pa et très prestigieux à l'époque, dont la transmission parvint plus tard à Bu ston et à Tsong kha pa.

mTshur ston eut trois disciples principaux, 'Khon Gad pa kirti, Khams pa Ro mnyam rdo rje, et 'Ches ston bSod nams rgyal mtshan, à qui il transmit la tradition des Nobles de *Guhyasamāja* ornée des instructions clés de Nāropa. Ro mnyam rdo rje du Khams est connu principalement pour être allé vers l'Inde chercher cette transmission avant de revenir au Tibet la recevoir de mTshur ston, Maitripa et Mar pa, les deux personnes de qui il voulait la recevoir, étant décédés. Il est l'auteur d'un grand commentaire sur le tantra (NKSB, vol. 28) et d'un rituel d'initiation. 'Khon Gad pa kirti fut celui qui transmit la tradition de *Guhyasamāja* au Tibet. Après l'avoir longuement étudiée avec Mang ra Seng ge rgyal mtshan, le disciple principal de 'Gos khug pa lhas btsas (dont la traduction du *Guhyasamājatantra* est préservée dans le *bKa' 'gyur*), il se tourna vers mTshur ston, dont les instructions clés lui permirent d'avoir expériences et visions. Cette expérience (l'apprentissage du tantra à travers la tradition exégétique de 'Gos et la réalisation grâce à la bénédiction des instructions de Nāropa véhiculée par la tradition de Mar pa) se répéta dans les générations suivantes, et la tradition de Mar pa de *Guhyasamāja* (comme celle de *Hevajra* transmise par les rNgog) fut généralement reconnue pour son efficacité méditative.

Si les histoires religieuses insistent particulièrement sur *Guhyasamāja*, les biographies mettent plutôt l'accent sur la maîtrise que fit mTshur ston de la pratique de l'éjection. L'histoire de cette transmission est exposée principalement dans une collection conservée dans le *gDams ngag mdzod*[1926].

[1925] Tsangnyön 2010, 100-101.

[1926] DND, 8 :203-233 ; Mei 2009, 29-40.

Mes ston Tshon po bSod nams rgyal mtshan

Mes ston « le gros » venait de sTag tshal dans le gTsang, une région près de l'actuel rGyal rtse (Gyantsé). Il était issu d'une famille riche et invita plusieurs fois Mar pa chez lui, où il lui fit de grandes offrandes, parfois présentées au nombre de trois, ce qui force la comparaison avec rNgog Chos rdor, qui venait d'un milieu semblable. Mes ston était lui aussi laïc et à l'origine d'un lignage héréditaire. Il reçut de Mar pa la plupart des instructions qu'il avait ramené d'Inde (*Catuṣpīṭha*, *Cakrasaṃvara*, *Hevajra*, *Guhyasamāja* et *Mahāmāyā*) mais fut particulièrement connu pour sa transmission de *Hevajra*. Les biographies décrivent sa maîtrise de la pratique de la luminosité, accomplie pendant le sommeil profond.

Mi la ras pa

Si les informations sur mTshur ston et Mes ston sont rares, celles sur Mi la ras pa sont pléthoriques, en tibétain comme dans les sources occidentales[1927]. Il se distingue nettement de rNgog ston, mTshur ston et Mes ston, les trois disciples qui continuèrent la lignée d'exégèse (*bshad brgyud*) de Mar pa, en continuant sa lignée de pratique (*bsgrub brgyud*).

Le KGND associe Mi la ras pa à deux maṇḍalas majeurs, Cakrasaṃvara à cinq divinités et Vajravārāhī à cinq divinités et plusieurs transmissions mineures : les cinq sœurs bKra shis Tshe ring ma (des divinités protectrices), Amitāyus et les trois divinités spéciales de Mar pa. Il a joué un rôle central dans la transmission du sNyan brgyud et fait partie du rosaire d'or du lignage bKa' brgyud, c'est-à-dire le lignage de transmission du mahāmudrā. Malgré son rôle central dans l'histoire de ce lignage, il ne passa que peu de temps en compagnie de Mar pa, cinq ou six ans selon les sources. Il a cependant propagé un style basé sur les instructions clés et la méditation intensive dans des lieux isolés qui est devenu paradigmatique de ce lignage. Ce style, diffusé par ses chants et une tradition hagiographique très forte et couplé à une transmission prestigieuse venant d'Inde lui a permis de devenir le yogi le plus célèbre du Tibet.

Mar pa mGo yag

Mar pa mGo yag (ou mGo legs) ne fait pas partie du groupement principal en quatre disciples car il ne fut pas à l'origine d'un lignage significatif. Il fut pourtant celui qui passa le plus de temps avec Mar pa, finança ses voyages en Inde et joua un grand rôle dans l'élaboration de sa tradition biographique. Il venait d'une riche famille du 'Dam ou Byang, une région au nord de lHa sa et au sud de la chaîne montagneuse du gNyan chen thang lha.

[1927] Quintman 2014, Roberts 2007, Larsson 2012 principalement pour les études ; il existe également de nombreuses traductions des chants de Mar pa et de sa biographie par gTsang smyon (aujourd'hui surtout Tsangnyön 2010).

Deuxième chapitre : ancêtres d'os et familles apparentées

Ancêtres d'os : l'histoire familiale avant le XIe siècle

Environ 13% de ST1 et ST2 constituent la généalogie de rNgog Chos rdor, une partie absente de ST3 et de toutes les autres histoires religieuses, bien qu'une connaissance de cette généalogie soit parfois apparente. L'histoire des premières générations est largement fictive, mêlant des récits mythiques sur les origines de la Dynastie sPu rgyal avec des descriptions d'époques plus tardives, et usant de portraits hyperboliques. Il est probable que l'auteur de ST1 disposait d'une ébauche de généalogie qu'il enrichit de récits généraux sur l'Empire, comblant ainsi les lacunes par des informations dépassant largement les rNgog. La présentation résumée qui suit ne mentionne que les personnages principaux ; pour plus de détails, le lecteur est prié de se référer à l'arbre généalogique reproduit p. 208.

Le premier ancêtre, rNgog rje Zings po rje, vécut à l'époque du vingt-huitième roi du Tibet, lHa tho tho ri (IV-Ve siècles). Le texte dit qu'il descendit du royaume des dieux par une échelle à neuf barreaux, comme les premiers rois de la dynastie. Le clan rNgog est considéré comme l'une des neuf branches de la tribu des sTong, l'une des quatre à l'origine de la population tibétaine. Trois générations après rNgog rje Zings po rje naquit rNgog dPal khrom, un officier pendant le règne de Srong btsan sgam po qui marque le début de la période historique du Tibet. On ne sait pas grand-chose de concret sur lui tant sa biographie est tissée de récits généraux sur les innovations politique et culturelles de l'époque. Il semblerait que ce soit ses cinq petits-fils qui firent entrer le clan rNgog dans une phase plus historique à la fin du VIIe siècle. Ils furent des officiers et soldats dans l'armée tibétaine pendant le règne de Khri 'Dus srong (676-704) et son puissant ministre mGar stong rtsan. Cette période est dominée par les rivalités avec les puissances voisines, particulièrement la Chine des Tang, et marquée par une expansion puis une contraction de l'Empire. Le troisième des cinq frères, rNgog gTsan gnya', est à l'origine de la lignée menant à Chos rdor. Il commença sa carrière comme officiant dans un temple avant d'entrer au service d'un seigneur et de partir à la guerre dans le nord-est du Tibet. Il se distingua en défendant son seigneur contre une attaque chinoise, à la suite de quoi il prit la tête d'un régiment et fut octroyé un insigne et des terres dans la vallée de Gra au Tibet Central. Son petit-fils, rNgog bTsan gzigs snang ba, grand propriétaire de la vallée de Dol, se convertit au bouddhisme après l'Empereur Khri Srong lde btsan (742-800) en 779. Peu de détails sont connus sur les générations suivantes, mais les noms se font plus nombreux, ce qui indique que la source devient probablement plus précise. Le grand-père de Chos rdor, Yang dga', s'installa dans un lieu nommé Nad kha. Il est probable que c'est le père de Chos rdor, Pan chen kha ba, qui s'installa dans la vallée de gZhung.

Familles apparentées

Plusieurs religieux portent le nom rNgog aux XIe et XIIe siècle. Leurs liens, ou absence de lien, avec les rNgog de gZhung sont déterminés dans le chapitre II.2. de la thèse.

Dans l'histoire religieuse tibétaine, ce nom fait immédiatement penser soit au lignage du disciple de Mar pa décrit dans cette thèse, soit au fondateur du monastère et séminaire de gSang phu ne'u thog, rNgog Legs pa'i shes rab (XIe s.), et son célèbre neveu, le traducteur rNgog Blo

ldan shes rab (1059-1109). Il s'avère que les deux sont apparentés. L'un de leurs ancêtres communs est rNgog bTsan gnya', dont les exploits décrits plus haut sont également mentionnés dans la généalogie de Legs pa'i shes rab proposée dans le *Deb ther sngon po* (p. 391-392). Son petit-fils bTsan gzigs snang ba est également présent dans les sources sur la vie des rNgog de gSang phu[1928]. Les deux lignées se sont scindées quatre générations avant Chos rdor, avec les trois fils de g.Yu khri. Le premier, dPal le, s'installa à 'Dam can et initia la lignée menant à Chos rdor. Le troisième, Yul sbyin, s'installa à sGog, sur la rive nord du lac Yar 'brog. Son fils, rDo rje gzhon nu, eut lui-même cinq fils. Le premier, Legs pa'i shes rab, devint disciple d'Atiśa et fonda gSang phu en 1073. Le quatrième, Chos skyabs, engendra Blo ldan shes rab.

Une autre famille, connue pour sa transmission de *Guhyasamāja*, est à l'origine d'une « tradition rNgog » de ce tantra sans aucun lien ni avec Mar pa ni avec les rNgog de gZhung mais venant de l'enseignement de 'Gos Khug pal has btsas[1929]. Le nom de cette famille n'est pas complètement clair, et les sources tibétaines comme les études occidentales hésitent entre l'orthographe rNgog et rDog. Du point de vue des rNgog de gZhung, dont certains membres furent liés à ces religieux du *Guhyasamā*ja, le nom est rDog ou rTog, mais jamais rNgog. Cela ne permet pas de conclure avec certitude en faveur de la graphie rDog, mais montre au moins que les rNgog de gZhung ne les considéraient pas comme des parents. Dans cette thèse le nom rDog est donc systématiquement retenu.

Les rDog descendaient du ministre appelé rDog d'un « roi indien » nommé dGra ngan qui trouva refuge au mNga' ris (Tibet Occidental). rDog émigra vers le Tsong kha, à l'autre extrême de la sphère d'influence tibétaine. Au XIe siècle, son descendant rDog Ye shes 'byung gnas migra à son tour avec plus d'une centaine de personnes vers le Tibet Central pour y chercher le Dharma. L'un de ses neveux, rDog Ye shes seng ge, reçut *Guhyasamā*ja de Mar ston Seng ge rgyal mtshan, le disciple de 'Gos, ainsi que de 'Gos lui-même, il fonda deux monastères et reprit celui de Mar ston. Son fils, Nyi ma seng ge, fut ordonné par Ba ri Lo tsā ba (1040-1112), devint un détenteur important de *Guhyasamā*ja connu sous le nom de rDog Mu ni. Parmi ses disciples, on compte l'arrière-petit-fils de gNyos (le traducteur étant allé en Inde avec Mar pa) et Thogs med grags, le fils de rNgog mDo sde. Son fils, rDog 'Phags pa skyabs, surnommé rDog Āryadeva, fut le plus célèbre du lignage.

Une autre figure du XIe siècle fut rDog/rNgog Byang chub 'byung gnas, le disciple principal de Klu mes Shes rab tshul khrims qui participa à la réintroduction du Vinaya au Tibet Central et fonda le monastère de Yer pa Ba reng près de lHa sa. C'est là que Byang chub 'byung gnas accueillit Atiśa lors de sa visite du Tibet Central. Le récit familial des rDog détenteurs du *Guhyasamāja* le présente comme un autre des descendants du ministre rDog du roi dGra ngan, bien que le moment de la séparation des différentes branches de la famille ne soit pas explicité.

[1928] Van der Kuijp 1983, 269, n. 77.

[1929] L'histoire des rNgog/rDog est connue grâce à leur histoire familiale, le *rDog rabs gsal ba'i me long*, ainsi que le *gSang 'dus chos 'byung* de Bu ston.

Troisième chapitre : la vie des rNgog de gZhung

Les chapitres 3, 4 et 5 de la partie II sont l'historiographie de la famille rNgog de gZhung et plus particulièrement son histoire religieuse, prenant en compte les réseaux de maîtres et de disciples qui furent liés aux rNgog au fil des générations. Malgré son association étroite avec Mar pa, le lignage rNgog ne fut pas, et n'aurait pu être, un groupe hermétique. Les rNgog reçurent de nombreux autres enseignements, et les traditions rNgog essaimèrent largement. La représentation d'un lignage étant une construction sociale et littéraire, la réalité n'est jamais aussi linéaire que ne le suggère la représentation. Ainsi, bien qu'une certaine linéarité soit nécessaire dans ce travail pour permettre une certaine clarté, un effort particulier est également apporté à la documentation des lignées parallèles et des intersections.

rNgog Chos rdor (1023-1090)

rNgog Chos rdor fut le seul descendant de rNgog Pan chen kha ba, un religieux des tantras anciens, et de sa femme 'Od ldan ma. Dans les biographies de Mar pa, son nom est généralement décondensé en Chos sku rdo rje, mais les *Rosaires* l'appellent Chos kyi rdo rje (Dharmavajra). Il naquit une vingtaine d'années après Mar pa, à Ri bo dans la vallée de gZhung, où fut construite la maison de Ri bo khyung lding. Il étudia les tantras anciens avec son père et avec le dGe bshes dGyer pa, qui demeurait dans la vallée voisine de celle de Ri bo. D'après les *Rosaires* et les commentaires du *Hevajratantra* de la tradition rNgog, c'est chez le dGe bshes qu'il entendit parler de Mar pa, à qui il rendit immédiatement visite dans le lHo brag. Comme décrit dans le chapitre I.2, Chos rdor fit trois grandes offrandes à Mar pa, d'abord alors qu'il l'avait invité à gZhung puis deux autres fois à la fin de la vie de Mar pa, dans le lHo brag. Même si ces trois offrandes furent l'occasion de trois cycles d'enseignements spécifiques, il est clair que rNgog fréquenta son maître de manière plus régulière dans les vingt à trente dernières années de sa vie, comme le montrent de nombreuses descriptions de Chos rdor avec plusieurs autres disciples de Mar pa pratiquant ensemble des *gaṇacakra* ou assistant à l'entrée de leur maître dans le corps d'un animal (plus particulièrement un moineau).

Chos rdor était marié avec une femme nommée dPa'/sPa mo Chos mo, la sœur d'un de ses disciples sPa sBa ba can, et originaire elle aussi de gZhung. Par rapport à la quasi-absence des femmes dans les *Rosaires*, Chos mo fut très présente dans la vie de son mari puisqu'elle l'accompagna dans le lHo brag pour prendre soin de leur fils, mDo sde, lors de la seconde donation, et s'occupa de Mi la ras pa lorsqu'il passa un an à gZhung sous la direction spirituelle de Chos rdor. Chos rdor était à la tête d'un domaine rural sans doute doté d'une grande quantité de bétail (chevaux, moutons et yaks) qu'il put offrir à Mar pa à plusieurs reprises, et il avait des ressources suffisantes pour inviter des maîtres à gZhung sur de longues périodes.

Chos rdor n'entretint pas des relations qu'avec Mar pa. Parmi ses autres cycles d'enseignements importants figure notamment la tradition *gSang ldan* de *Nāmasaṃgīti* qu'il reçut à deux reprises, d'abord de Bye ma lung pa Chos kyi seng ge, un disciple du paṇḍita indien Sūryasiddhi, puis de Khams pa Shes rab rdo rje, un disciple indirect de Smṛtijñānakīrti, comme décrit dans le chapitre I.2. Il se rendit également à Shangs dans le gTsang afin de recevoir

d'autres yogatantras, probablement le *Compendium des principes*[1930], de Sum pa Ye shes 'bar. Du fait de signes qu'il jugea inopportuns cependant, Chos rdor décida de ne pas poursuivre cette relation et se rendit plutôt à 'O yug pour recevoir ce tantra de Ram klu gong pa. Chos rdor fréquenta également Shes rab brtsegs de la famille Klog skya. Ce traducteur passa de nombreuses années au Népal et prépara plusieurs traductions sous la direction de Vāgīśvarakīrti (*Ngag gi dbang phyug*), l'un des disciples de Nāropa actifs à l'époque de Mar pa. Il est possible qu'il rencontra également Mar pa lui-même, qui en tout cas avait noué des liens fertiles avec sa famille. Shes rab rtsegs est le traducteur de deux textes dont Chos rdor avait la transmission, le commentaire du *Nāmasaṃgīti* de Vilāsavajra et le *Mahāmāyātantra*. Les *Rosaires* déclarent expressément que Chos rdor assista Shes rab brtsegs pour sa traduction du *Mahāmāyātantr*a ; il est possible que ce soit également le cas pour le commentaire de Vilāsavajra. Chos rdor reçut également de lui la transmission d'une forme courroucée de *Vajrapāṇi*, *Mahābala* (*sTobs po che*), qui devint ensuite une transmission suivie dans la famille rNgog.

Comme Chos rdor n'est mort que cinq ans après Mar pa et qu'il est représenté comme ayant eu un nombre conséquent de disciples, il est évident qu'il a commencé à avoir des disciples alors que lui-même recevait encore l'enseignement de Mar pa. Ces disciples jouèrent un rôle central dans la diffusion du lignage rNgog au fils de Chos rdor, qui perdit son père à douze ans. Le plus important d'entre eux fut sans doute Ram rtsan can, le neveu du Ram dont rNgog reçut les yogatantras, et qui a vraisemblablement été également le disciple de Mar pa bien qu'il ne soit pas nommé dans les biographies du traducteur. Il lui transmit notamment *Hevajra*. La tradition de Ram, dans laquelle l'exégèse du *Hevajratantra* est combinée avec celle du *Nāmasaṃgīti*, continua ensuite sur plusieurs générations, enseignée notamment dans le séminaire de Shangs. L'un des quatre disciples principaux de Ram, lCe bande dBen tsa, est l'auteur d'un commentaire sur *Hevajra* préservé dans le NKSB, aux côtés de plusieurs autres commentaires de la tradition Ram. Un autre disciple de Chos rdor est son beau-frère sPa sBa ba can, qui se spécialisa dans la pratique de *Nāmasaṃgīti*. rDog chung pa de dMyal se spécialisa dans la pratique de *Catuṣpīṭha* et de *Pañjara*, et rDog Mun pa can dans celle de *Mahāmāyā*. L'orthographe du nom de ces deux disciples est assez incertaine, mais il est vraisemblable qu'ils ne faisaient partie ni de la famille des rNgog, ni de celle des rDog mentionnés précédemment. D'autres disciples de Chos rdor furent Sum pa Phod ka can, rGya 'A ma can et lHo pa Chung ma can.

Chos rdor fut sans doute malade la dernière année de sa vie, car il prépara activement son départ avec son fils afin que celui-ci sache à qui s'adresser pour approfondir les traditions rNgog. A soixante-sept ans, en 1090, Chos rdor partit seul sur le flanc de la montagne où il faisait généralement des retraites. En jouant du *damaru*, il s'éleva lentement dans les airs et se rendit dans la terre pure du vajrayāna, Khecara.

<u>rNgog mDo sde (1078-1154)</u>

En 1077, dans le gTsang, une *ḍākinī* sans âge du nom de Jo mo sGre mo présidait les funérailles de son maître, le mKhan po sPug Ye shes rgyal, lorsqu'une lumière verte traversa le ciel vers

---

[1930] *Tattvasaṃgraha* (*De kho na nyid bsdus pa*), Tōhoku 479.

l'est. Elle prédit alors que l'année suivante, le mKhan po reprendrait naissance comme le fils de Mar pa ou de rNgog de gZhung. Sans doute un peu le fils des deux, rNgog mDo sde naquit donc en 1078, et son père, alors âgé de cinquante-cinq ans, calcula son horoscope selon la tradition du *Catuṣpīṭha*[1931]. À quatre ans, il accompagna Chos rdor jusqu'au lHo brag et assista aux transmissions de Mar pa, notamment celles de *Hevajra*. Lorsqu'on son père mourut à ses douze ans, il savait déjà enseigner les *Deux Segments*, le tantra racine de *Hevajra*, et il put continuer son apprentissage sous l'égide des disciples de son père. Il hérita également à ses dix-huit ans d'un commentaire sur les *Deux segments* composé par son père ainsi que d'instructions sur les six doctrines de Nāropa couchées par écrit pour lui. Il reçut ainsi parfaitement, de Mar pa, de rNgog Chos rdor et de ses disciples, l'ensemble des traditions qui constituèrent ensuite les « traditions rNgog » et qui firent le succès de sa famille pendant des générations. Il ne se contenta cependant pas de cet héritage prestigieux et le compléta en recevant notamment les instructions de huit *lo tsā ba*s. Dans sa jeunesse, il rencontra d'abord Chag Lo tsā ba, Bya Lo tsā ba, Rwa Lo tsā ba et Pa tshab Lo tsā ba (1055-1145 ?). Dans la seconde moitié de sa vie, il reçut également l'enseignement de Shud bu Lo tsā ba, 'Chi ru'i snyan chung Lo tsā ba, Zangs dkar Lo tsā ba et Ba ri Lo tsā ba (1040-1112).

De ces traducteurs et d'autres maîtres moins prestigieux, mDo sde reçut principalement trois types de transmissions. Tout d'abord, il reçut de Rwa Lo tsā ba des yoginītantras comme *Saṃputa* and *Vajravārāhī*, qui ne faisaient pas partie des transmissions reçues par son père. Il s'intéressa aussi particulièrement aux divinités de richesse telles que *Jambhala* et *Vasudhārā*, qu'il reçut de plusieurs des traducteurs ; ces transmissions constituaient probablement à ses yeux une addition utile à cette époque de construction de son lignage. Comme son père, il reçut également le yogatantra du *Compendium des principes*. Pour cela, il se rendit à Bo dong dans le gTsang et fréquenta sNur Nyi ma 'od, un disciple du lignage de Zangs dkar Lo tsa bā et l'un des détenteurs principaux de cette transmission du yogatantra.

Si l'identité de plusieurs de ces traducteurs n'a pas traversé les siècles, quatre d'entre eux (Rwa, Pa tshab, Zangs dkar et Ba ri Lo tsā ba) sont très connus. Parmi eux, Rwa Lo tsā ba rDo rje grags eut une relation particulièrement tumultueuse avec le lignage de Mar pa, qu'il convient de résumer ici. Cette présentation est connue principalement par la biographie de Rwa Lo tsā ba, elle-même largement écrite pour satisfaire les ambitions politiques dGe lugs pa au XVIIe siècle[1932]. Si le corpus décrivant la vie de Rwa Lo tsā ba a donc certainement subi des modifications, il n'est cependant pas dépourvu de sources, et il est vraisemblable que certains des événements décrits concernant sa relation avec rNgog mDo sde aient pu se produire. Rwa Lo tsā ba est particulièrement renommé pour avoir « libéré » le fils de Mar pa, Mar pa mDo sde, qui l'avait défié sur son maître et son *yi dam*, qu'il considérait comme non-bouddhistes[1933]. Mar pa mDo sde tenta de l'éliminer par sa pratique de *Hevajra ;* Rwa lo répliqua avec *Vajrabhairava*, et ne manqua pas sa cible : Mar pa mdo sde mourut d'une chute de cheval le lendemain. Quelques temps après cet événement, Rwa lo se rendit à gZhung afin de rendre

[1931] Sugiki 2003 et 2005.

[1932] Cuevas 2015a et 2015b.

[1933] Cuevas 2015a, 217-222.

hommage au reliquaire de Mar pa[1934]. Les disciples de Mar pa tentèrent de le retenir, mais Rwa lo traversa les murs et des reliques lui tombèrent sur les genoux. Toujours pas convaincus, les disciples s'interposèrent encore, mais Rwa lo les maîtrisa grâce à ses pouvoirs magiques. rNgog mDo sde finit par avoir confiance en lui et l'invita à l'ermitage de Ri bo khyung lding où il lui fit des offrandes, que Rwa lo utilisa pour faire des rituels et construire des statues dans la vallée. Il donna aussi des transmissions à mDo sde, vraisemblablement *Saṃputa* et *Vajravārāhī*. mDo sde eut ensuite des visions de Vajrabhairava et de Vajravārāhī et parvint à différents niveaux de réalisation. Bien que ces derniers points soient un motif récurrent dans la biographie de Rwa lo, les transmissions entre mDo sde et lui sont confirmées par les *Rosaires*, et cette relation permit donc à mDo sde de compléter sa tradition par des transmissions considérées comme lacunaires dans l'héritage de son père (notamment *Saṃputa*).

Les *Rosaires* décrivent aussi deux relations avortées par mDo sde avec deux maîtres pourtant centraux dans sa famille et l'école bKa' brgyud, Ram rTsan can et Ras chung pa. Le premier était un disciple important de son père, qui avait expressément conseillé à mDo sde d'étudier avec lui. Le second était l'un des disciples principaux de Mi la ras pa, un autre des disciples de Chos rdor. mDo sde se rendit dans l'ermitage de Ram à 'O yug (gTsang) et de Ras chung pa à Lo ro (lHo ka). Dans les deux cas cependant, déçu par la façon dont les événements de déroulaient et par les paroles échangées, il décida de ne pas recevoir d'enseignement. Dans le cas de Ras chung pa notamment, il semblerait que le problème vienne du fait que le *ras pa* ne parlait pas de Mi la ras pa mais de Ti phu pa, dont il avait reçu la transmission en Inde, ce qui fut sans doute perçu par mDo sde comme une dépréciation de l'enseignement de Mi la ras pa, et par extension de Mar pa, et donc des rNgog. Ces descriptions soulignent en tout cas le caractère très conservateur de mDo sde, à la tête d'un lignage exégétique dans lequel la forme et la pureté de la transmission avaient une importance capitale.

Les reliques

A la fin de sa vie, mDo sde était vraisemblablement un religieux respecté et reconnu comme l'un des détenteurs majeurs de l'enseignement de Mar pa. Ce capital symbolique est signifié dans les *Rosaires* par le recueil des reliques de Mar pa à gZhung. La vénération des reliques est au cœur de religions comme le bouddhisme et le catholicisme. Les reliques du Bouddha en particulier jouent un rôle majeur dans tous les pays bouddhistes, sauf au Tibet où elles sont dépassées par le culte rendu aux saints tibétains[1935]. Au Tibet, les reliques sont soit des parties du corps du saint (cheveux, ongles, os, momies, etc.) soit des objets ayant été en contact avec lui (habits, articles religieux, etc.). Elles peuvent être obtenues de son vivant ou après sa mort. De toutes ces reliques, des perles peuvent apparaître. Dans le cas de Mar pa, les reliques en question sont des *gdung*. Ce terme est expliqué par Rachel Guidoni[1936] :

[1934] Cette description est clairement anachronique, puisque le reliquaire ne fut érigé qu'après la mort de mDo sde, et que le lieu est appelé sPre'u zhing dans la biographie de Rwa lo alors que le monastère ne fut fondé que par son petit-fils, rNgog Kun dga' rdo rje.

[1935] Guidoni 2006.

[1936] Guidoni 2006, 220.

> Dans les sources tibétaines, le terme *gdung* a souvent un sens ambigu. En général, dans les récits de funérailles, il désigne des fragments d'os, voire, par extension, tous types de reliques. Plus rarement, il peut désigner la dépouille en entier. Il semblerait toutefois que les auteurs tibétains aient cherché à lever cette ambiguïté en spécifiant, dans la mesure du possible, à quoi ils faisaient référence : ainsi trouve-t-on mention de *gdung rus* pour désigner des os, *'phel gdung* pour désigner des perles, ou *dmar gdung* pour un corps momifié.

Les reliques de Mar pa, récoltées après sa mort, sont par deux fois appelée *gdung rus*. Bien que le mot *ring bsrel* soit utilisé dans ST2, il s'applique à d'autres reliques données par Jo mo sGre mo ou à des perles apparues sur le corps de rNgog Sangs rgyas yon tan (XIV-XVe s.). Bien que les habitants actuels de gZhung considèrent qu'il y avait parmi les reliques de sPre'u zhing des corps momifiés (exhumés à la Révolution Culturelle)[1937], il s'agissait des corps de religieux rNgog, mais pas de celui de Mar pa. Plusieurs sources considèrent en effet que Mar pa fut incinéré[1938], et les *gdung rus* étaient donc sans doute des restes d'os, certains avec des signes miraculeux apparus spontanément dessus, récoltés après la crémation.

rNgog mDo sde réunit des reliques venant de deux sources. Les premières, des os de Mar pa avec des cheveux et des ongles de Mi la ras pa, lui furent données par Jo mo sGre mo, qui avait peut-être obtenu ces objets de Ras chung pa, avec qui elle eut un lien. Bien que sGre mo demandât à mDo sde d'enchâsser les reliques à gZhung, elles furent emmenées par un disciple Khams pa, et sGre mo offrit d'autres reliques à mDo sde, cette fois complétées de restes mortuaires du mKhan po sPug Ye shes rgyal. mDo sde reçut aussi une grande quantité des os du traducteur de la petite-fille de Mar pa. Elle les avait récupérés dans la demeure de Mar pa à Gro bo lung. L'épisode décrivant la façon dont les os y étaient dilapidés sert dans les *Rosaires* à mettre en valeur comment mDo sde peut être considéré comme l'héritier légitime de Mar pa. Ils décrivent que le fils de Mar pa, Bya ri 'khor lo, avait profané un petit stūpa dans lequel Mar pa avait déposé des reliques de Nāropa (cheveux, ongles et bouts de métal) et où ses propres os avaient ensuite été rajoutés. Bya ri 'khor lo garda les os de Mar pa, qu'il accrocha à la fenêtre de la demeure pour la protéger, et il vendit le reste. Ce tableau de déréliction du siège de Mar pa est complété par celui dressé dans le *Sras mkhar ma*[1939] : un autre fils de Mar pa, dGe 'dun, y est décrit comme assassiné par sa propre femme, à la suite de quoi Se bro Rin chen dbang phyug, son disciple, hérita de Gro bo lung. La famille Se bro y demeurait encore cinq générations plus tard, lorsque Guru Chos dbang (1212-1270) y révéla un trésor constitué de quinze rouleaux « cachés » par Mar pa dans les murs de sa demeure. Dans ces conditions, peut-être avant le décès de dGe 'dun, la petite-fille de Mar pa récupéra ses os délaissés par Bya ri 'khor lo et les offrit à mDo sde. D'après les *Rosaires*, mDo sde la rencontra d'abord dans la vallée de Dol où il lui donna l'initiation de *Nairātmyā* et l'invita l'année suivante à gZhung, lors d'un concile religieux dont elle fut l'invité d'honneur pendant une journée. Elle offrit alors

---

[1937] *rNam rab Guide*, 173.

[1938] *Rwa lung gser phreng*, 1 :163 ; *lHo rong chos 'byung*, 49.

[1939] Ducher 2016a.

l'ensemble des reliques à mDo sde[1940]. Mar pa, représenté par une femme et présent dans ses reliques, présida donc ainsi des rangées d'érudits et d'accomplis, dans lesquels il est dit que se trouvait Phywa pa Chos kyi seng ge du séminaire de gSang phu, Bla ma zhang, alors à la tête de la région de lHa sa, ou encore le Sa skya bSod nams rtse mo. Bien que ce concile ne soit pas attesté ailleurs que dans les *Rosaires*, il indique la puissance atteinte par les rNgog à la fin de la vie de mDo sde, et à quel point celle-ci était étroitement liée avec leur statut d'héritiers légitimes de Mar pa.

Descendance

Bien qu'il fût le fils unique de Chos rdor, mDo sde eut lui-même au moins six enfants, de trois femmes différentes. Malheureusement, ils moururent tous avant lui et c'est donc principalement grâce à ses petits-fils que le lignage continua. Le premier fils de mDo sde, Jo tshul ou Tshul khrims shes rab, naquit en 1103 de l'union de mDo sde avec une consorte venant du gTsang, la région de Jo mo sGre mo. Le second, Jo thog ou Thogs med grags, le fils de sa femme légitime, naquit cinq ans plus tard, suivi par trois autres fils, Jo 'od, Jo bsod et Jo bde. mDo sde eut également une fille, sTong chung dbang mo, née entre les deux derniers fils et d'une autre femme, Jo non. Les deux lignées de la famille rNgog, nommées gTsang tsha et rGyal tsha, viennent des enfants des deux premiers fils de mDo sde, Jo tshul et Jo thog. Tous les autres moururent avant d'avoir une descendance.

Le statut de Jo tshul est assez ambigu dans les sources rNgog. Fils illégitime, il ne fut pas élevé à gZhung, où il ne passa que quelques mois avec sa mère dans son enfance. Les *Rosaires* insistent pourtant sur la prophétie faite par sGre mo que si mDo sde rendait visite à sa consorte un jour plus tard un fils naîtrait, et sur sa capacité à enseigner les *Deux segments* à quinze ans (bien que l'on ne sache pas de qui il avait reçu cette transmission, étant également disciple de sGam po pa). Il est évident que l'élévation rétrospective du statut de Jo tshul dans la filiation rNgog vient du fait que c'est son fils, Kun dga' rdo rje, qui hérita des reliques de Mar pa et fonda le monastère de sPre'u zhing pour les abriter. La façon dont Kun dga' rdo rje parvint à avoir un statut jugé suffisant important pour hériter des reliques de Mar pa, alors même qu'il avait des petits-cousins dans la lignée rGyal tsha, est assez incertaine. L'explication la plus vraisemblable, celle sur laquelle les *Rosaires* insistent, est que Kun dga' rdo rje était un virtuose religieux, comme ses cousins Ra mo et rDor seng (il hérita après la mort de rDor seng) mais au contraire de leurs enfants. Ses cousins héritèrent donc de la maison rGyal tsha (Ri bo khyung lding, jusqu'ici le siège principal mais qui devint ensuite le siège secondaire, *gdan sa 'og ma*), alors que Kun dga' rdo rje hérita des reliques, autour desquelles il fonda le nouveau siège, sPre'u zhing (*gdan sa gong ma*).

Quoi qu'il en soit, Jo tshul mourut en 1146, quelques mois après la naissance de son fils Kun dga' rdo rje (et de sa fille dont on ne sait rien). A cette époque, il résidait probablement dans la vallée de gZhung. Premier-né de mDo sde, il fut aussi le dernier à mourir, précédé par tous les autres, du plus jeune au plus âgé : Jo dbe mourut en 1133, la même année que sTong chung

---

[1940] ST1, 12-13 ; ST2, 37-38. Le *Deb ther sngon po*, 491-492, décrit que la première rencontre eut lieu lors du concile et la seconde à lHa sa l'année suivante.

dbang mo et Jo bsod, qui périrent ensemble lors d'un naufrage en traversant le gTsang po. L'année suivante, ils furent suivis par Jo 'od, et finalement par Jo thog, l'héritier principal de mDo sde, dix ans plus tard, en 1144. Ainsi, à soixante-huit ans, mDo sde avait perdu tous ses enfants. Il avait heureusement trois petits-fils. Le plus âgé d'entre eux, Ra mo, était considéré comme la réincarnation de sa fille sTon chung dbang mo, et c'est grâce à lui, ainsi qu'aux disciples de mDo sde, que les traditions rNgog purent être transmises aux générations suivantes.

Malgré ces années difficiles, comme souligné plus haut, la fin de la vie de mDo sde fut marquée par le concile religieux qui reflète sa position dominante dans la société de l'époque. A l'âge de 76 ans, fin 1154, mDo sde mourut à Nya mo gyur, l'endroit même où le concile s'était tenu quelques années auparavant, dans le bas de la vallée de gZhung. Ainsi, malgré la perte de son père alors qu'il était encore jeune, il parvint à sauvegarder et à faire fructifier son héritage. Auteur de nombreux commentaires, résumés et rites des traditions rNgog, il fut un maître conservateur respecté et joua un rôle majeur dans la conservation et la transmission de l'œuvre de Mar pa, secondé par ses fils et petit-fils, et de nombreux disciples.

Disciples

Les *Rosaires* considèrent que rNgog mDo sde eut 361 disciples grâce à qui son enseignement put se propager largement[1941]. Une quantité non négligeable de lignées des traditions rNgog sont effectivement sorties de la famille rNgog après mDo sde, pour y retourner parfois plusieurs générations plus tard. Comme les *Rosaires* et les autres histoires religieuses sur les rNgog sont généralement contées de leur point de vue, il existe peu de détails sur les disciples extérieurs à la famille. Cette partie s'appuie donc en grande partie sur les recueils d'enseignements reçus, et par conséquent est souvent dépouillée des détails hagiographiques traditionnels.

Les deux disciples principaux de mDo sde furent rTsags Dar ma rgyal po et 'Gar ston bKra shis dbang phyug. Le premier, aussi nommé Dharmarāja, est particulièrement distingué dans le *Deb ther sngon po* comme celui ayant permis à la tradition rNgog de se répandre. Il est l'auteur de plusieurs commentaires sur *Hevajra* et *Nāmasaṃgīti* dans le NKSB. Il apparaît dans la lignée de *Nāmasaṃgīti* des *Rosaires*, et dans celle de *Catuṣpīṭha* de plusieurs recueils d'enseignements reçus. 'Gar ston bKra shis dbang phyug (mGar dans la plupart des recueils d'enseignements reçus) ne figure dans aucune des lignées rNgog mentionnées dans les *Rosaires* mais est l'auteur de plusieurs commentaires sur *Hevajra* et *Mahāmāyā*. Il fit la requête à mDo sde d'un commentaire sur *Nāmasaṃgīti*.

Un autre disciple important fut gTsang bande sNgo tsha Chos sku, qui venait de 'Bri mtshams dans le gTsang. Bien que son nom soit parfois orthographié rNgog tsha, il ne faisait pas partie de la famille rNgog et sa transmission continua dans la famille sNgo tsha pendant plusieurs générations. Il reçut l'ensemble des traditions rNgog, composa un commentaire sur *Hevajra* (contenant la seule représentation xylographique de rNgog mDo sde connue) et transmit les

[1941] Voir le tableau récapitulatif p. 272.

lignées de *Mahāmāyā* et de *Catuṣpīṭha*. Son disciple (fils ou neveu ?), sNgo tsha dKon mchog dpal, fut le disciple du petit-fils de mDo sde, rGyal tsha rNgog rDor seng.

Mal nag pa est considéré comme l'un de ceux ayant reçu le plus extensivement l'enseignement rNgog, en faisant la requête avec autant d'or que nécessaire, avant de le pratiquer pendant toute sa vie dans un ermitage de montagne très isolé de la région de Dwags lha sgam po. Bien qu'il soit peu connu ailleurs que dans les *Rosaires*, sa maîtrise des traditions rNgog joua un rôle crucial pour le lignage car rNgog Kun dga' rdo rje, le petit-fils de mDo sde et fondateur de sPre'u zhing, passa trois ans dans son ermitage où il reçut de nouveau et pratiqua toutes les transmissions qu'il avait hérité de mDo sde et de son cousin Ra mo.

Ram rDo rje grags, le neveu de Ram rTsan can (qui fut le disciple de Chos rdor), est particulièrement connu pour sa transmission de la tradition rNgog de *Vajrapañjara*. Un autre des disciples de mDo sde fut gTsang sMra seng, aussi nommé lCe ston mDo sde seng ge. La biographie de la famille lCe originaire de Sri'u gcung, initialement publiée dans le LGNT, est reproduite dans le NKSB du fait du lien de gTsang sMra seng avec mDo sde dans son enfance (il reçut de lui principalement *Nāmasaṃgīti*) et plus tard avec rNgog rGyal tsha rDor seng (dont il reçut principalement *Pañjara*).

L'un des disciples dont le nom n'est pas présent dans les *Rosaires* mais dont la transmission fut importante fut Cog ro Chos rgyal, qui était originaire du mDo smad (A mdo)[1942]. Considéré comme un exégète majeur de *Cakrasaṃvara* par Bu ston, il reçut cette transmission de Mar pa do pa et de son fils, et fréquenta aussi mDo sde à gZhung, recevant particulièrement *Hevajra* et *Mahāmāyā*. Bien que ses écrits sur *Hevajra*, *Cakrasaṃvara* et *Saṃputa* aient disparu en tibétain, ils font l'objet de recherches dans le domaine tangoute et chinois, car il existe des traductions chinoises de ces tantras dérivées de traductions tangoutes[1943]. Les recherches sont complexes et les conclusions pour l'instant nébuleuses ; il semblerait néanmoins que le traducteur Tangoute du *Saṃputatantra*, Piputifu, traduisit également trois commentaires sur ce tantra attribués à rNgog mDo sde, et dont la transmission passerait par Cog ro Chos rgyal[1944].

Un autre des disciples qui n'est pas mentionné dans les *Rosaires* mais qui reçut pourtant l'enseignement de mDo sde fut le fondateur de l'ordre sMar pa bka' brgyud, sMar pa Shes rab ye shes (1135 ? -1203), originaire du sMar khams au Tibet Oriental. sMar pa resta trois ans à gZhung à la fin de la vie de mDo sde et y reçut la plupart des traditions rNgog. Il voyagea ensuite jusqu'à bSam yas avec Ra mo, et rencontra Phag mo gru pa, de qui il devint le disciple. Alors qu'il se trouvait dans l'ermitage de Phag mo gru pa, il tomba gravement malade. Sa biographie relate qu'il eut alors une vision de Dud sol ma, « comme sur la peinture ». Il lui offrit une *gtor ma* et elle lui dit qu'elle arrivait de gZhung pour voir comment il allait, car on lui avait rapporté sa maladie. sMar pa eut également une vision de Nairātmyā à cette période. Cette anecdote est intéressante car il existe une *thang ka* ancienne de Dud sol ma de la tradition

[1942] Hou 2017, BA, 386.

[1943] Wei 2013.

[1944] Hou 2017, 361-367.

sMar pa bka' brgyud dans la collection Bordier, vraisemblablement celle mentionnée dans la biographie.

Les *Rosaires* et les autres sources énumèrent plusieurs autres disciples dont on ne sait pas grand-chose. Le lien de plusieurs d'entre eux avec mDo sde est cependant sujet à caution. Tshe'u bande Dar re est ainsi nommé dans le *Deb ther dmar po* et *sngon po*[1945], et deux de ses commentaires, dont un sur *Hevajra* de la tradition rNgog, sont reproduits dans le NKSB. Il semblerait cependant qu'il ait plutôt été le disciple de Chos rdor. En ce qui concerne Bla ma Zhang (1123-1193), plusieurs études considèrent que mDo sde était l'un de ses maîtres de jeunesse[1946]. Bla ma Zhang dit en effet dans son autobiographie que l'un de ses maîtres racines fut rNgog sTod lung pa chen po. Bla ma zhang n'est cependant pas mentionné dans la liste des disciples de mDo sde, et surtout mDo sde ne venait pas du sTod lung (région au nord-ouest de lHa sa). Il est donc vraisemblable qu'il s'agit en fait d'un descendant d'un autre rDog ou rNgog de cette région (voir chapitre II.2). Il est possible que Bla ma zhang ait participé au concile organisé par mDo sde comme l'affirme le *Deb ther dmar po*, mais sans être pour autant un proche disciple. Il aurait également participé à la consécration du reliquaire contenant les os de Mar pa à la demande de Ra mo, et étudié avec Thogs med grags[1947]. Les sources ne permettent cependant pas de trancher à ce sujet, et à mes yeux la question du lien de Bla ma zhang avec le lignage rNgog demeure ouverte.

Lignée rGyal tsha rNgog

Les deux lignées rNgog, gTsang tsha et rGyal tsha, dérivent des deux premiers fils de mDo sde, Jo tshul et Jo thog. Bien qu'à partir du début du XIIIe siècle et la fondation de sPre'u zhing par gTsang tsha Kun dga' rdo rje, la lignée gTsang tsha ait pris le dessus, ce sont en fait les deux premières générations de la lignée rGyal tsha, Jo thog et Ra mo, qui ont permis la continuité du lignage religieux rNgog malgré les difficultés familiales rencontrées par la descendance de mDo sde au début du XIIe siècle.

Thogs med grags (1108-1144)

Bien que Thogs med grags (aussi nommé Jo thogs et Asaṅgakīrti) soit mort à 36 ans, il était très érudit et un auteur prolixe. Trois de ses rites et commentaires sont conservés dans le NKSB bien que les *Rosaires* fassent état de compositions plus nombreuses. Il reçut l'ensemble des traditions rNgog de son père et fréquenta également d'autres maîtres, notamment rDog Mun pa can (<rDog Mu ni ?) de qui il reçut la tradition des Nobles du *Guhyasamāja*. Dans le Yar lung, il étudia le *Grand commentaire sur les chutes racines* (*rTsa ltung rgya cher 'grel pa*) avec le « roi Indien sPug » (?), textes sur les endommagements tantriques qui devint ensuite l'une des transmissions du lignage rNgog mentionnée dans les *Rosaires*, bien que les commentaires sur le sujet conservés dans le NKSB ne semblent pas être de Jo thog.

[1945] *Deb dmar*, 73, *Deb sngon*, 493.

[1946] Sørensen and Hazod 2007, 77, n. 19 ; Yamamoto 2012.

[1947] *lHo rong chos 'byung*, 182.

Thogs med grags se maria avec lHa cig ’bum rgyan qui venait du ’Phrang po, la région sur la rive nord du gTsang po. Elle lui donna deux fils, rGyal tsha Ra mo et rGyal tsha rDor seng, nés alors qu’il avait 26 et 32 ans. Ils furent des détenteurs majeurs du lignage rNgog, lui permettant de survivre malgré la disparition prématurée de Thogs med grags.

rGyal tsha Ra mo (1134-1170)

Ra mo, aussi nommé Ra mo che dans ST1, fut reconnu comme l’incarnation de sa tante sTon chung dbang mo par Jo mo sGre mo, qui avait également reconnu mDo sde comme une incarnation. Il est décrit comme maîtrisant précocement les traditions rNgog (les sept maṇḍalas ainsi que les traditions récemment introduites comme *Mahābala*, *Saṃputa* et *Vajravārāhī*). Il étudia également le véhicule des caractéristiques à gSang phu avec Phywa pa Chos kyi seng ge et devint un disciple de sGam po pa, à qui il fit la requête des vœux monastiques. sGam po pa lui conseilla cependant de continuer son lignage familial et il eut trois fils avec sa femme Shi sha dur ma. Le premier, lCam me, hérita du lignage après la mort de rGyal tsha rDor seng. Bien que cela ne soit pas totalement clair dans les sources, il semble que Ra mo et rDor seng aient partagé au moins la maison rNgog (Ri bo), l’héritage à la génération suivante ne se faisant pas avant le décès à un âge avancé de rDor seng.

Ra mo eut plusieurs disciples importants, dont au moins un, rGya Pho ba lung ba, était l’un des détenteurs majeurs des transmissions de Mar pa au XIIIe siècle et joua plus particulièrement un rôle primordial pour la continuation du lignage rNgog. Disciple du I^e^ Karmapa (1110-1193) et de Bla ma zhang, détenteur de la tradition de Mar pa du *Guhyasamāja* et du sNyan rgyud, rGya étudia avec la plupart des maîtres bKa’ brgyud de son temps et fut reconnu comme une incarnation de Mar pa mDo sde. Il reçut très jeune les traditions rNgog de Ra mo, et continua plus tard sa formation avec rDor seng. A la fin de sa vie, il retransmit les enseignements rNgog au premier abbé de sPre’u zhing, gZi brjid grags pa, le fils de Kun dga’ rdo rje, à son frère rGyal po dga’, ainsi qu’au fils de ce dernier, Seng ge sgra. rGya figure notamment dans la lignée de *Pañjara* conservée dans les *Rosaires*, aux côtés de deux autres disciples de Ra mo, bKa’ lung Snyan sgom et mNga’ ris pa Byang tshul, dont on ne sait rien. S’il y est considéré comme un disciple de Ram (rDo rje grags), il est en fait plus vraisemblable qu’il reçut cette transmission Ra mo et que ce lignage, reproduit dans de nombreuses sources, doive être modifié pour lire « Ra mo » au lieu de « Ram ». Un autre disciple de Ra mo fut rTsags Yon tan seng ge, le neveu de rTsags Dar ma rgyal po, lui-même l’un des deux disciples principaux de mDo sde. rTsags Yon tan seng ge figure notamment dans certaines lignées de la forme masculine de *Catuṣpīṭha*. Un troisième, rDog *jo sras* Nyi ma, pourrait être le détenteur de la tradition rDog de *Guhyasamāja* mentionné plus haut, aussi nommé rDog Mu ni. Comme celui-ci, sous le nom Mun pa can, compte également parmi les maîtres de Thogs med grags, la question demeure ouverte.

rGyal tsha rDor seng (1140-1207)

Au contraire de son père et de son frère qui moururent à 36 ans, rDor seng eut une longue vie durant laquelle il continua d’enseigner les tradition rNgog à gZhung. Il les reçut de son grand-père mDo sde puis de son frère Ra mo. Son statut après la mort de Ra mo n’est pas complètement clair, surtout vis à vis de son cousin Kun dga’ rdo rje qui semble s’être installé

dans une nouvelle maison dès les années 1180. Il semble que rDor seng ait continué de diriger la branche rGyal tsha dans la maison de Ri bo, alors que son cousin fondait une nouvelle maison, les deux étant présent à partir de cette date à gZhung. gTsang pa rGya ras (1161-1211)[1948], par exemple, est considéré comme ayant étudié avec les deux, bien que sa lignée de bSe 'pho remonte plus particulièrement à rDor seng. rDor seng n'est pas dit être moine ; l'héritage n'ayant lieu qu'après sa mort, on peut se demander si Ra mo et rDor seng ne partagèrent pas la maison de Ri bo dans le cadre d'un mariage polyandrique. Quoi qu'il en soit, rDor seng fut un auteur prolifique et eut de nombreux disciples. Ceux qui sont mentionnés dans les *Rosaires* ne sont pas particulièrement connus, mais la biographie de Zhang Nyi ma 'bum (1158-1213)[1949], comme celle de la famille lCe de Sri'u gcung, le considèrent comme le détenteur le plus important des traditions rNgog à la fin du XIIe siècle. Il enseigna également à rGya Pho ba lung ba.

Après la construction de sPre'u zhing par la lignée gTsang tsha rNgog, la lignée rGyal tsha ne retrouva jamais la prééminence qu'elle eut à l'époque de Jo thog, Ra mo et rDor seng. Elle continue cependant de produire des religieux importants, dont le rôle est gommé par le poids pris par sPre'u zhing, siège principal du fait de la présence des reliques. Le fils de Ra mo, lCam me, dirigea les funérailles de son père et de son oncle, et hérita de la maison à la mort de son oncle en 1207. Ses deux frères, Jo shag et Jo 'od, eurent chacun un fils, nommé uniquement dans ST1, de la descendance desquels on ne sait rien. Quatre générations après lCam me, Rin chen dpal composa plusieurs textes sur *Hevajra* et une collection de biographies intitulée *Bla ma'i rnam thar rnams*[1950]. Il fut le maître de dPal gyi rdo rje, l'auteur de ST1, et il est probable que ces biographies aient figuré parmi les sources de dPal gyi rdo rje. On ne sait pourtant rien de Rin chen dpal, ni de son fils Kun dga' bzang po. Ce dernier eut cinq fils qui furent les contemporains du dernier grand abbé de sPre'u zhing, gTsang tsha Byang chub dpal. Parmi eux, rGyal tsha bSod nams don grub composa plusieurs textes et transmit les traditions rNgog (voir chapitre II.5)

Lignée gTsang tsha

Kun dga' rdo rje (1145-1222)

Bien que Jo tshul ne passât que peu de temps à gZhung, son fils Kun dga' rdo rje y vécut dès son plus jeune âge et reçut la plupart des maṇḍalas rNgog de mDo sde. A la mort de ce dernier à ses 9 ans, il continua sa formation avec son oncle Ra mo, puis avec des disciples de mDo sde, notamment lHo nag sMon lam khri et l'ermite Mal nag pa, auprès de qui il passa trois ans en retraite. Il étudia aussi les instructions de Zhi byed avec 'Chus pa Dar ma brtson 'grus (1117-1192) et reçut plusieurs enseignements de rGa Lo tsā ba gZhon nu dpal. Kun dga' rdo rje voyagea au Khams dans les années 1170, où il attira un grand nombre de disciples, notamment dans les monastères de Ri bo che, rTa sna et Shor dgon, mais il ne fut pas un auteur prolifique, ne laissant que des notes sur les *Deux segments*. Il revint à gZhung au début des années 1180

[1948] *lHo rong chos 'byung*, 649 ; *Pad dkar gsung 'bum*, 3 : 23-24 et 22 : 14.

[1949] *rNying ma bka' ma rgyas pa*, 46 : 363.

[1950] ST1, 21 : 8 ; ST2, 47 : 6.

et eut trois fils avec sa femme, Zhig mo, dont le premier moine du lignage, gZi brjid grags pa. Son premier fils, né en 1181, fut aussi moine mais on ne sait rien de lui.

L'événement le plus marquant de la vie Kun dga' rdo rje est sa fondation de sPre'u zhing autour des reliques de Mar pa et de mDo sde, dont on ne sait malheureusement pas grand-chose. Le *Deb ther dmar po* (p. 77) déclare qu'il fit construire l'aile sud de sPre'u zhing et fonda le siège. Le *mKhas pa'i dga' ston* (p. 779) ajoute que lorsque l'héritage de rDor seng fut partagé entre cousins, un homme nommé sPre'u offrit un champ à Kun dga' rdo rje, d'où le nom « champ de sPre'u » donné au monastère qu'il y construisit.

gZi brjid grags pa (1190-1269)

gZi brjid grags pa, le deuxième fils de Kun dga' rdo rje, prit les vœux monastiques à 24 ans avec Ba char ba, un disciple de Bya 'dul 'dzin pa brTson 'grus 'bar (env. 1100-1174), fondateur d'un séminaire dans le monastère de Zul phu et religieux bKa' gdams pa détenteur de la lignée du Vinaya venant de Klu mes. Tous les moines du lignage rNgog après gZi brjid grags pa prirent les vœux à Zul phu. gZi brjid grags pa reçut les traditions rNgog de son père et de descendants des disciples de mDo sde, Lo skya dKon mchog dpal, lCe ston Sangs rgyas 'bum et rGya Pho ba lung ba. Il eut plusieurs autres maîtres de qui il reçut des transmissions variées. Il agrandit sPre'u zhing en faisant construire une aile nord et un temple pour abriter les reliques. Ses disciples autres que ses neveux ne sont pas nommés, et il n'est pas connu pour ses compositions.

Âgé de trois ans de moins que gZi brjid grags, rGyal po dga' (1193-1272) reçut la même éducation que son frère bien qu'il fût en charge de la continuité du lignage héréditaire rNgog. Il est particulièrement connu pour avoir continué la lignée de *Pañjara* reçue de rGya Pho ba lung ba. Les deux frères ont leur biographie dans les *Rosaires*, ce qui témoigne d'une égalité de statut à cette époque entre religieux ordonnés ou non. Il eut trois fils qui reproduisirent cette situation, l'aîné Seng ge sgra (1235-1308) assurant la progéniture, et le cadet Rin chen bzang po (1243-1319) devenant abbé de sPre'u zhing. Dans ce cas-là cependant, Seng ge sgra initia une nouvelle maison, et ce fut le plus jeune frère, Chos rdor (1246-1311), qui demeura dans la maison de sPre'u zhing avec ses enfants.

Rin chen bzang po (1245-1319)

La vie de Rin chen bzang po est l'une des plus longues des *Rosaires* mais elle ne contient que très peu de détails biographiques concrets. Une biographie longue existait mais n'a pas été retrouvée à ce jour. Rin chen bzang po reçut les enseignements familiaux de son oncle gZi brjid grags pa et de son père rGyal po dga'. Il réintroduisit également dans la famille la tradition de *Nāmasaṃgīti* d'un certain bZang mo ba qui détenait une lignée venant de mDo sde. Comme ses ancêtres, il reçut également de nombreux enseignements d'autres maîtres. A 17 ans, il prit les vœux de novice et étudia le véhicule des caractéristiques au séminaire de Zul phu, où il fut pleinement ordonné à 32 ans. Il devint abbé de sPre'u zhing à la mort de son oncle en 1269, et fut relayé à la tête du monastère par son frère laïc Seng ge sgra lors de son voyage au Khams entre 1278 et 1280. Il y enseigna dans de nombreux monastères, ainsi que dans le monastère de Tshal Yang dgon, fondé par Bla ma Zhang près de lHa sa. Grâce aux fonds recueillis lors de ces tournées, il agrandit le siège et commissionna la réalisation d'un canon en lettres d'or et

d'argent. Il fut également un mécène des communautés monastiques du Tibet Central de sKyor mo lung et de Zul phu. Il était considéré comme une émanation de Mar pa, dont il composa une longue biographie, le *rNam thar rim bzhi pa*. Bien qu'il fût l'auteur de plusieurs rites sur les traditions de *Pañjara*, *gSang ldan* et *Mahāmāyā*, aucune de ses œuvres n'est disponible à ce jour, et les textes lui étant attribués dans le NKSB sont en fait l'œuvre d'un descendant contemporain de rNgog Byang chub dpal, Rin chen dpal bzang po.

Seng ge sgra et ses fils

Bien que la biographie de Seng ge sgra soit présente dans ST1 et ST2, celle de ST2 est beaucoup plus courte et ne mentionne pas sa descendance, ce qui indique une évolution dans l'équilibre des pouvoirs à gZhung entre 1360 (ST1) et 1440 (ST2), les abbés de sPre'u zhing prenant alors une prééminence certaine.

Seng ge sgra, le premier fils de rGyal po dga', était comme lui un religieux maître de maison. Comme les autres membres du lignage religieux rNgog, il reçut la plupart des transmissions dans sa jeunesse, principalement de son père, ainsi que de gZi brjid grags pa et de rGya Pho ba lung ba. Il reçut également de nombreux enseignements en compagnie de Rin chen bzang po, et rencontra plusieurs hiérarques bKa' brgyud de l'époque. Il est considéré comme l'auteur de trois textes, dont un rite d'initiation de *Catuṣpītha* conservé dans le NKSB, et un *rNam thar rin chen phreng ba* au titre étrangement proche de celui de ST1. Il est possible que dPal gyi rdo rje (l'auteur de ST1) ait plus tard repris ce texte, ce qui y expliquerait l'importance de sa lignée.

Le fils de Seng ge sgra, Rin chen rgyal mtshan, naquit sans doute en 1271, alors que son père avait 36 ans. Il avait deux jeunes frères et trois fils. Tous les six sont absents de ST2. Il est possible que Rin chen rgyal mtshan ait été moine car il étudia le Vinaya à Zul phu et sKyor mo lung, et que les fils soient donc ceux de ses frères. Bien qu'il n'ait pas composé d'œuvre particulière, il est notable qu'il est le dernier détenteur de la plupart des lignées spirituelles de ST1, souvent avec Chos kyi rgyal mtshan. La situation est inversée dans ST2 où toutes les lignées se terminent par Chos kyi rgyal mtshan et Don grub dpal.

Chos kyi rgyal mtshan (1283-1359)

Chos kyi rgyal mtshan (ou Chos rgyal), le premier fils de Chos rdor et petit-fils de rGyal po dga', fut le quatrième abbé de sPre'u zhing. Bien que sa biographie soit interrompue dans ST1, pourtant composée un an après son décès en 1359, elle est continuée dans ST2. Cette différence de traitement entre Rin chen rgyal mtshan et Chos kyi rgyal mtshan suggère des tensions entre les branches des rNgog, résolues dans ST2 par l'effacement de la lignée de Rin chen rgyal mtshan. Le retrait de Chos kyi rgyal mtshan dans ST1 est particulièrement visible dans certaines erreurs de sanskritisation de son nom ou l'omission des miracles et visions mentionnées dans ST2.

Comme ses ancêtres, il étudia avec un grand nombre de maîtres différents. Comme Kun dga' rdo rje et Rin chen bzang po, il voyagea jusqu'à Dar rtse mdo au Khams, où il attira de nombreux disciples, surtout au monastère sTag lung de Ri bo che, les offrandes reçues lui

permettant d'agrandir sPre'u zhing. Il est dit avoir eu une vision de Cakrasaṃvara. Il composa un commentaire sur les *Deux segments* et des rites sur d'autres maṇḍalas rNgog.

Don grub dpal (1331 ? - 1398 ?)

Don grub dpal reçut les vœux de novice de son oncle Chos kyi rgyal mtshan à l'âge de 11 ans, et reçut ensuite la pleine ordination à Zul phu, où il apprit également le Vinaya ainsi que d'autres sujets. Son oncle Chos kyi rgyal mtshan mourut en 1359, et Don grub dpal devint donc abbé. Cela coïncide avec la naissance de son fils, Byang chub dpal, et il semblerait donc que Don grub dpal ait rendu ses vœux alors même qu'il accédait au trône de sPre'u zhing. A cette période, plusieurs autres religieux rNgog prirent de l'importance, notamment son cousin Sangs rgyas yon tan, le fils d'un autre de ses oncles. Bien que Don grub dpal soit le récipiendaire final de toutes les lignées dans ST2, son fils reçut plusieurs transmissions de son oncle Sangs rgyas yon tan, comme le montrent plusieurs recueils d'enseignements reçus. Il est donc possible que Don grub dpal détenait toutes les transmissions sans en maîtriser complètement l'exégèse, comme le montre le fait que son fils dut recevoir plusieurs transmissions rNgog d'autres maîtres, de sPre'u zhing et d'ailleurs. Don grub dpal eut plusieurs disciples qui donnèrent ensuite les transmissions à Byang chub dpal, notamment le yogi Ā Hūm Vajra et Chos sgo ba Chos dpal shes rab du gTsang.

rNgog Sangs rgyas yon tan (XIV-XVe s.)

Sangs rgyas yon tan (Sang yon dans ST2) était probablement contemporain de son cousin Don grub dpal avec qui il partagea plusieurs maîtres, notamment leur oncle Chos rgyal, et les deux disciples précédemment mentionnés. Il est probable que ses parents se soient installés dans une nouvelle maison. Son neveu Rin chen dpal bzang po écrit plusieurs œuvres dans un monastère ou ermitage nommé Brag dmar chos 'khor gling ; Sang yon est parfois appelé Bla ma sNang rab, et son neveu Chos rje sNa ra ba. Bien que sa place soit mineure dans ST2, clairement rédigé depuis la perspective de sPre'u zhing, Sang yon joua en fait un rôle plus important que son cousin dans la transmission des traditions rNgog, ce que montre sa place dans la lignée de *Hevajra* du KGND. Il est nommé « rNgog pa'i rin po che » dans l'histoire abbatiale de Zul phu, où il transmit *Vajrabhairava* en 1371. Il y revint plus tard avec son cousin et un autre lama de gZhung, Tshul gang pa, qui transmit ensuite *Catuṣpīṭha* à Byang chub dpal. ST2 note qu'il y eut de nombreux signes miraculeux à la mort de Sangs rgyas yon tan, et que des reliques apparurent sur son corps.

Son neveu, Rin chen dpal bzang po, était un contemporain de Byang chub dpal, sans doute plus jeune que lui puisqu'encore actif après sa mort, né sans doute vers 1400. On ne sait rien de plus, mais il est l'auteur de plusieurs textes reproduit dans le NKSB, attribués de manière erronée par les éditeurs à son ancêtre Rin chen bzang po.

Quatrième chapitre : Byang chub dpal (1360-1446)

Auteur, ou en tout cas inspirateur, de ST2, Byang chub dpal n'est pas décrit dans les *Rosaires*, mais sa vie est relatée dans le *lHo rong chos 'byung* et le *Deb ther sngon po*, dont les auteurs furent des disciples de Byang chub dpal. Le lHo ka étant à cette époque le cœur politique et religieux du Tibet Central, une grande quantité d'écrits sont maintenant disponibles sur les nombreux disciples de Byang chub dpal, et une certaine connaissance de sa vie peut donc être atteinte par ce biais.

Byang chub dpal est souvent considéré dans les sources de cette époque comme le dernier de sept générations de rNgog. Cette représentation des sept générations fait probablement écho à celle des sept maṇḍalas. Elle est présente assez tôt dans la tradition : les *Rosaires* mentionnent dans la liste des disciples la prédiction que Nāropa bénirait le lignage de Mar pa pendant sept générations, et le lignage religieux contient sept noms dans les deux cas. On trouve parfois des déclarations approchantes, par exemple que pendant sept ou treize générations les rNgog sauraient tenir la cloche et le vajra et seraient bénis par Nāropa, ou que les disciples de Mar pa iraient à Khecara pendant treize générations. Ce n'est pourtant qu'à l'époque de Byang chub dpal que l'on parle du « dernier des rNgog ». A l'époque de ses disciples, un consensus apparut sur les sept générations, et il est possible que pour ces auteurs l'expression désigne mDo sde, les cinq abbés de sPre'u zhing à partir de Kun dga' rdo rje et Byang chub dpal.

Dans sa jeunesse, Byang chub dpal étudia extensivement avec son père et son oncle Sangs rgyas yon tan l'ensemble des traditions rNgog. Il étudia aussi les phases de perfection de ces traditions avec le yogi Ā Hūm Vajra, et reçut la forme féminine de *Catuṣpīṭha* d'un moine de sPre'u zhing. Il fit un effort particulier pour rassembler toutes les traditions Mar rNgog qui s'étaient dispersées avec le temps, recevant parfois de plusieurs personnes initiations, explications, instructions clés et lectures rituelles. Il fut donc une figure essentielle dans la restructuration de l'identité rNgog, qui s'était perdue au fil des ans et de l'accumulation de transmissions s'écartant du cœur de l'enseignement pratiqué par Mar pa et rNgog Chos rdor. Il contribua ainsi à la construction d'une collection de traditions rNgog plutôt que des transmissions séparées, générant par-là l'idée des « sept maṇḍalas » qui devint ensuite le mot-clé désignant la tradition rNgog. Son disciple Mi bskyod rdo rje note qu'il était considéré comme une émanation de Mar pa, et il joua en effet un rôle central dans la diffusion de l'enseignement de Mar pa et de rNgog mDo sde au XVe siècle.

Byang chub dpal devint l'abbé de sPre'u zhing après le décès de Don grub dpal en 1386 ou 1398, bien qu'il fût lui-même marié et eut deux fils. L'un d'eux, bKra shis dpal grub, étudia au monastère de rTses thang et devint abbé du vivant de Byang chub dpal, en 1426. Byang chub dpal resta à gZhung en retraite et enseigna une grande partie de sa vie. 'Gos Lo tsā ba déclare ainsi qu'il a vu un commentaire des *Deux segments* appartenant à Byang chub dpal avec 182 marques, indiquant que Byang chub dpal avait enseigné ce texte à 182 reprises.

La vallée de gZhung s'ouvre au sud du gTsang po. Elle est située entre les vallées de Gong dkar et de Dol qui étaient habitées à cette époque par les puissants seigneurs de la famille Yar

rgyab[1951], et se trouve non loin de la vallée du Yar lung d'où la dynastie Phag mo gru pa dirigeait une grande partie du Tibet Central depuis de XIVe siècle[1952]. Son emplacement était donc idéal pour assurer le rayonnement des rNgog dans la région. Dans la première partie de sa vie, Byang chub dpal eut cependant des difficultés, ayant été critiqué auprès d'un certain bDag po Drung chen pa, probablement le seigneur Yar rgyab Drung chen bZhi 'dzom (1372/73-1446). En 1408 cependant, Byang chub dpal rencontra Tsong kha pa, qui jouissait alors d'un capital symbolique considérable et avait des liens très proches avec les seigneurs Yar rgyab et Rlangs lha gzigs. Alors que Tsong kha pa résida plusieurs mois à Grum bu lung, au sud-ouest de lHa sa à l'invitation du dirigeant Grags pa rgyal mtshan (1374/75-1432), Byang chub dpal eut de longues discussions avec lui, et Tsong kha pa fut très impressionné. Par la suite, la réputation de Byang chub dpal s'améliora grandement et il attira de plus en plus de disciples, notamment parmi les proches de Tsong kha pa.

Il entra peu à peu dans le cercle Phag mo gru pa et établit des liens avec la famille Rlangs lHa gzigs. Il enseigna ainsi à sPyan snga bSod nams rgyal mtshan (1386-1434), le XIIe abbé du monastère de gDan sa mthil et frère de Grags pa rgyal mtshan. Après la mort de Grags pa rgyal mtshan, son neveu Grags pa 'byung gnas et son frère Che sa Sangs rgyas rgyal mtshan (1389-1457) se disputèrent le pouvoir, qui alla finalement à Grags pa 'byung gnas. Byang chub dpal fut invité à la cour en 1441, et il enseigna également à Che sa Sangs rgyas rgyal mtshan qui était exilé à Yar rgyab.

Le disciple le plus importants de Byang chub dpal fut 'Gos Lo tsā ba gZhon nu dpal qui passa de longues périodes à gZhung[1953]. En 1424-1425, il reçut de Byang chub dpal une série de 53 enseignements portant sur toutes les traditions rNgog. Il y retourna en 1431, où il reçut encore de nombreux cycles. Bien que Byang chub dpal lui demandât d'écrire sa biographie, 'Gos Lo tsā ba ne composa pas de récit plus détaillé que celui contenu dans le *Deb ther sngon po*. Sa maîtrise des traditions rNgog fut cependant cruciale pour le lignage. Il les passa notamment à deux de ses disciples, ce qui leurs permit de continuer et d'essaimer. Le premier, Lo chen bSod nams rgya mtsho, était un protégé du seigneur Grags pa 'byung gnas, à la demande de qui il assista à l'âge de 17 ans à la transmission que Byang chub dpal donnait à la cour. Le second fut le IVe Zhwa dmar Chos grags ye shes (1453-1524), qui était disciple des deux traducteurs.

Le IVe Zhwa dmar voyagea pour la première fois au Tibet Central en 1476, où il établit des liens avec 'Gos lo, Lo chen et leurs réseaux de disciples et de mécènes. D'eux, il reçut l'ensemble des traditions rNgog et développa une grande dévotion pour l'enseignement de Mar pa. Il établit un monastère et centre de retraite dans le lHo brag, continuant à occuper une place centrale dans le régime Phag mo gru pa et plus tard gTsang pa, et à attirer beaucoup de disciples. Il composa également plusieurs rites sur les traditions rNgog et permit ainsi au lignage de se répandre très largement. C'est grâce à lui notamment que l'enseignement rNgog entra dans les

---

[1951] Fermer forthcoming.

[1952] Czaja 2013.

[1953] Voir Ehrhard 2002a, Ehrhard 2002b, Mathes 2007, Czaja 2013 et Fermer 2017 pour les sources occidentales. Pour les biographies en tibétain, voir les textes des œuvres complètes du IVe Zhwa dmar mentionnées dans la bibliographie.

lignages ’Bri gung et Karma bka’ brgyud, et ses transmissions sont considérées comme primordiales par Kong sprul dans le KGND (voir chapitre I.1 pour plus de détails).

Byang chub dpal eut d’autres disciples importants qui permirent l’introduction des traditions rNgog dans plusieurs ordres majeurs. L’un de ces disciples fut le premier ’Brug chen Kun dga’ dpal ’byor (1428-1476). Il fut reconnu comme la réincarnation de gTsang pa rgya ras et était l’héritier de la famille rGya possédant le monastère de Rwa lung. Il unissait donc plusieurs types de lignages et avait un grand pouvoir symbolique. Kun dga’ dpal ’byor rencontra Byang chub dpal à gZhung au printemps 1446, quelques semaines avant sa mort. Byang chub dpal lui dit qu’il l’attendait et mit entre ses mains la responsabilité du lignage rNgog, ainsi que plusieurs de ses reliques, dont les ornements d’os de Nāropa et le « vase d’initiation des sept générations » (*bdun brgyud kyi dbang bum*). Il lui transmit l’ensemble des initiations et instructions clés des cycles rNgog, et lui demanda de diriger ses funérailles. Malgré cet important transfert de capital religieux et symbolique, peu des traditions rNgog aujourd’hui disponibles remontent à Kun dga’ dpal ’byor.

Un autre disciple fut le XIIe abbé de sTag lung, Ngag dbang grags pa (1418-1496), qui visita sPre’u zhing en 1443 et reçut toutes les transmissions Mar rngog de Byang chub dpal[1954]. On sait peu de choses de cette rencontre, mais il n’était pas le premier sTag lung à s’intéresser au lignage rNgog, Kun dga’ rdo rje et Chos kyi rgyal mtshan (1283-1359) ayant établi des précédents lors de leurs séjours au Khams. De fait, les enseignements rNgog furent bien conservés dans cet ordre.

Plusieurs autres disciples introduisirent l’enseignement de Byang chub dpal dans le lignage Sa skya. L’un d’eux fut le maître du *Kālacakra* Byams pa gling pa bSod nams rnam rgyal (1400-1475)[1955], neveu de Drung chen bZhi ’dzom et abbé du monastère de Byams pa gling dans le bas de la vallée de Grwa nang, l’un des centres religieux les plus importants du XVe siècle dans le lHo ka. Il reçut de nombreuses transmissions de Byang chub dpal en 1432 et sa biographie décrit comment bSod nams rnam rgyal tomba malade alors qu’il se trouvait à sPre’u zhing et fut guéri par Dud sol ma. Son neveu, le fondateur du monastère de Gong dkar chos sde, Kun dga’ rnam rgyal (1432-1496), reçut également les sept maṇḍalas de Byang chub dpal dans les années 1440, et établit plus tard des liens avec rNgog rGyal tsha bSod nams don grub. Les traditions rNgog furent ensuite conservées dans la tradition de Gong dkar, et le monastère reprit la responsabilité de gZhung après la disparition des rNgog au XVIIe siècle.

Cinquième chapitre : la vallée de gZhung après Byang chub dpal

Même si Byang chub dpal est considéré comme le dernier maître de sPre’u zhing et malgré la perte de plusieurs symboles importants, le lignage familial ne cessa pas à la mort de Byang chub dpal et plusieurs des transmissions aujourd’hui disponibles viennent de disciples des

---

[1954] *sTag lung chos ’byung*, 1 : 611 ; Sørensen and Hazod 2007, 745-746.

[1955] Fermer 2010, 49-52 ; Akester 2016, 275-277 ; Ehrhard 22002a, 79, 83-85, Fermer 2017, 81.

descendants de Byang chub dpal. Malgré certaines lacunes, les biographies de ces disciples permettent de reconstruire l'histoire rNgog jusqu'au XVIIe siècle. Après cette date, il ne semble plus que les lignages religieux et héréditaires aient coïncidé, les traditions rNgog étant maintenues dans d'autres ordres, et les rNgog connus étant détenteurs d'autres enseignements.

Après la mort de Byang chub dpal en 1446, ses reliques furent enchâssées avec celles de Mar pa et des autres rNgog dans un reliquaire à sPre'u zhing. Trois religieux rNgog représentant les trois branches du clan rNgog assistèrent aux funérailles :

- gTsang tsha bKra shis dpal grub, fils de Byang chub dpal et abbé de sPre'u zhing ;
- gTsang tsha Rin chen dpal bzang po, neveu de Sangs rgyas yon tan, ayant un ermitage à Brag dmar chos 'khor gling (dont la localisation n'est pas connue) et résidant peut-être dans le village de sNang rab, en bas de la vallée où se trouve sPre'u zhing.
- Don grub dpal bzang, aussi nommé lDum chung ba Don grub dpal ba. Il s'agit probablement de rNgog bSod nams don grub, lointain cousin de la branche rGyal tsha.

La descendance de Rin chen dpal bzang po n'est pas connue, et il est possible que cette branche de la famille rNgog cessa peu après lui. Les deux autres branches, gTsang tsha et rGyal tsha, continuèrent plusieurs décennies.

Succession gTsang tsha à sPre'u zhing

Byang chub dpal grub, le petit-fils de Byang chub dpal et neveu de bKra shis dpal grub, était abbé de sPre'u zhing en 1476 et continua les traditions rNgog à gZhung jusqu'au début du XVIe siècle. gTsang smyon He ru ka (1452-1507) résida plusieurs semaines dans la vallée dans les années 1480 et participa à des rituels avec Byang chub dpal grub, bien qu'il ne semble pas avoir reçu de transmissions[1956]. Ce fut le cas par contre de son disciple rGod tshang ras chen (1482-1559) qui pratiqua lui aussi pendant trois mois dans la grotte de Mi la ras pa. Outre plusieurs traditions rNgog, il reçut aussi *Cakrasaṃvara*, et étudia les biographies bKa' brgyud, dont un *gDung rabs* qui pourrait être ST2[1957]. Bien que le IVe Zhwa dmar visitât aussi sPre'u zhing en 1482, il fut invité par le tenant du siège (sans doute Byang chub dpal grub) mais ne semble pas non plus avoir reçu son enseignement.

rNgog Byang chub grags pa, le neveu de Byang chub dpal grub, fut un disciple de Gong dkar ba Kun dga' rnam rgyal mais on ne sait rien de particulier sur lui[1958].

Son disciple (son fils ?) rNgog Blo gros dpal bzang fut en revanche un maître important de Kun dga' grol mchog (1507-1565). Il figure dans quatre des lignées rNgog conservées dans le KGND. Dans sa biographie, il est dit que Kun dga' grol mchog fut invité à gZhung, sans doute au milieu du XVIe siècle, par Blo gros dpal bzang. Il y reçut les sept maṇḍalas, l'explication du *Rin chen rgyan 'dra*, les pratiques des phases de perfection associées à *Hevajra*, *Mahāmāyā* et

---

[1956] Biographie de gTsang smyon par rGod tshang ras chen sNa tshogs rang grol, p. 118 (Smith 2001, 65) ; Ehrhard 2010, 141, n. 22.

[1957] Ehrhard 2010, 141 et 152.

[1958] Fermer 2009, 339.

Catuṣpīṭha, ainsi que la transmission de *Dud sol ma*[1959]. Ces transmissions furent continuées et amplifiées par l'incarnation suivante de Kun dga' grol mchog, Tāranāthā (1575-1634), qui codifia plusieurs des maṇḍalas rNgog.

Le dernier descendant connu de la branche gTsang tsha fut 'Jam dbyangs 'od zer, qui vécut au début du XVIIe siècle et donna les sept maṇḍalas à mGon po bSod nams mchog ldan (1603-1659) vers 1628. mGon po bSod nams mchog ldan apparaît dans la lignée de *Catuṣpīṭha* d'un abbé de Gong dkar chos sde de cette époque, ainsi que dans celle du Ve Dalaï-Lama[1960]. C'était un religieux Sa skya pa reconnu comme une incarnation de Tshar chen et l'un des tuteurs du Ve Dalaï-Lama. mGon po bSod nams mchog ldan retourna à sPre'u zhing en 1657 afin de rendre hommage à la dépouille de 'Jam dbyangs 'od zer. C'est la dernière trace que l'on trouve d'un religieux rNgog vivant dans la vallée de gZhung.

Succession rGyal tsha à Thar pa gling

rNgog rGyal tsha bSod nams don grub fut actif à la fin de la vie et dans les décennies suivant le décès de Byang chub dpal. Il est l'auteur de plusieurs textes sur *Mahāmāyā*, *Catuṣpīṭha* et surtout *Dud sol ma*. Trois de ces textes furent composés à Ri bo khyung lding, et un au « grand séminaire Ri bo chos lding de gZhung », en 1469. Il semble être l'un des maîtres importants de l'époque dans la vallée de gZhung. Gong dkar ba Kun dga' rnam rgyal étudia avec lui les commentaires des maṇḍalas dans lesquels il avait été initié par Byang chub dpal et en reçut les lectures rituelles.

rNgog rGyal tsha bSod nams lhun po est le troisième disciple rNgog de Gong dkar ba Kun dga' rnam rgyal, et donc contemporain de Byang chub dpal grub et Byang chub grags pa de la branche gTsang tsha. Il était le petit-fils ou plus probablement petit-neveu de bSod nams don grub. Il apparaît dans la lignée de *Dud sol ma* du recueil d'enseignements reçus du Ve Dalaï-Lama sous le nom de Thar gling pa bSod nams lhun po, et avait donc établi une nouvelle maison ou temple nommé Thar [pa] gling.

C'est là que résidait son fils, rNgog bSod nams bstan 'dzin, dont la rencontre avec le Sa skya pa Tshar chen Blo gsal rgya mtsho (1502-1566/7) est restée célèbre. bSod nams bstan 'dzin n'est associée à aucune des transmissions du KGND, mais il eut pourtant plusieurs disciples connus. Le maître rNying ma mNga' ris Paṅ chen Padma dbang rgyal (1487-1542), dont le père descendait de Mar pa, se rendit dans la vallée de gZhung au milieu des années 1520 où il reçut les sept maṇḍalas de bSod nams bstan 'dzin [1961]. Tshar chen, dont la lignée de *Dud sol ma* parvint ensuite au Ve Dalaï-Lama et qui écrivit le catalogue de la transmission de *Dud sol ma* conservée dans le KGND, se rendit à Thar pa gling une première fois en 1523[1962]. Il reçut alors les sept maṇḍalas, *Dud sol ma* et le *Mi tra brgya rtsa*. Il y retourna en 1540, et reçut la *sādhana* externe de *Dud sol ma*. bSod nams bstan 'dzin était troublé par une dispute avec un « ennemi »

[1959] *Kun dga' grol mchog gsung 'bum*, 2 : 575.

[1960] 'Phrin las rnam rgyal gsan yig, 57 ; DL5 *thob yig*, 1 : 193a.

[1961] *bKa' ma mdo dbang gi bla ma brgyud pa'i rnam thar*, 322.

[1962] *Tshar chen rnam thar*, 486-487 et 556-561.

à gZhung dont il ne pouvait venir à bout car il vouait également un culte à Dud sol ma dans sa chapelle des protecteurs (*mgon khang*). L'identité de cet ennemi n'est pas connue, mais il est possible que des tensions aient alors éclaté avec la branche gTsang tsha rNgog toujours présente à sPre'u zhing et que cette histoire en soit la trace. Quoi qu'il en soit, Tshar chen partit plusieurs mois en retraite à Drang srong srin po ri, à quelques kilomètres de gZhung, où il pratiqua *Dud sol ma*. Lors de son retour à Thar pa gling neuf mois plus tard, des signes de succès étaient apparus, et l'ennemi était défait. Pour le remercier, bSod nams bstan 'dzin lui donna la *sādhana* secrète de *Dud sol ma* et en fit le détenteur de cette pratique. Tshar chen rêva ensuite qu'il purifiait les négativités associées à cette pratique de pacification, et généra une dévotion encore plus grande envers son maître.

La vallée de gZhung depuis le XVIIe siècle

Cette description suggère cependant que la situation s'était fortement dégradée à gZhung au milieu du XVIe siècle. Bien que bSod nams bstan 'dzin pût transmettre correctement les traditions rNgog, il n'était pas unanimement reconnu dans la vallée et avait des ennemis. Si cet ennemi était son cousin éloigné rNgog Blo gros dpal bzang, cela suggère des rivalités importantes dans le lignage. Malgré ces difficultés, des rNgog continuèrent d'habiter la vallée jusqu'au moins le milieu du XVIIe siècle, comme le montre la présence de rNgog 'Jam dbyangs 'od zer. La mort de ce dernier en 1657 marqua cependant un tournant important, avec le transfert de responsabilité du monastère à l'administration du Gong dkar chos sde. Il existe plusieurs explications de la façon dont cela s'est produit, mais aucune n'a de source vraiment solide. Le *Gong dkar chos sde'i gnas yig* déclare que le Ve Dalaï-Lama en confia la responsabilité à mGon po bSod nams mchog ldan[1963], mais cela n'est confirmé ni par l'autobiographie du Dalaï-Lama[1964] ni par celle de bSod nams mchog ldan. D'après Matthew Akester, sPre'u zhing devint une branche de Gong dkar chos sde à l'époque de Gong dkar ba Nyi ma gling Tshul khrims bkra shis, l'un des maîtres de bSod nams mchog ldan[1965]. Comme Tshul khrims bkra shis était contemporain de 'Jam dbyangs 'od zer, cela semble peu probable. Un article en tibétain sur sPre'u zhing déclare que l'autorité de sPre'u zhing fut transféré à bDe chen chos 'khor gling, un monastère 'Brug pa bka' brgyud de la vallée de gZhung. Bien que les moines fissent des rituels réguliers à sPre'u zhing, la situation fut jugée insatisfaisante, et ce fut finalement Gong dkar chos sde qui reprit la responsabilité du lieu[1966]. Gong dkar chos sde maintint un festival annuel à sPre'u zhing du 23ème au 29ème jour du premier mois tibétain avec une retraite de groupe (*sgrub mchod*) sur les sept maṇḍalas jusqu'à la Révolution Culturelle. Un centre de retraite affilié à Gong dkar chos sde fut également construit sur la colline d'où rNgog Chos rdor s'était envolé pour Khecara.

Pendant toute cette période, les reliques de Mar pa continuèrent d'attirer les pèlerins à sPre'u zhing. L'un d'eux fut Tāranātha (1575-1634) qui resta quelques jours dans le village de rNam

---

[1963] sKal bzang chos 'phel, 93.

[1964] Karmay 2014.

[1965] Akester 2016, 266 ; Fermer 2009, 183-184.

[1966] Phur bur rdo rje et Ngag dbang dkon mchog, 26 ; sKal bzang chos 'phel, 93. Jackson 2015, 246, no. 21.

rab à quelques kilomètres sPre'u zhing.[1967] Il se rendit un jour à sPre'u zhing mais ne rencontra apparemment pas rNgog 'Jam dbyangs 'od zer. Au XVIIIe siècle, bSod nams dbang phyug (1660-1731), abbé de Yang tsher et Tha kar, visita les reliques de Mar pa à « Ri bo khyung lding »[1968]. En 1848, 'Jam dbyangs mkhyen brtse dbang po (1820-1892) visita également sPre'u zhing où il eut une vision de Mar pa et rNgog, ce qui motiva sa requête à Kong sprul de composer le KGND[1969]. Le 39ème détenteur du trône de Sa skya, Drag shul Phrin las rin chen (1871-1935), visita sPre'u zhing (gZhung sPan zhing) en 1909[1970]. Le dernier pèlerin important, et celui qui laissa le récit le plus détaillé, fut Kaḥ thog Si tu Chos kyi rgya mtsho (1880–1924) qui visita la vallée début 1919[1971].

Le temple fut endommagé à plusieurs reprises. Il fut d'abord incendié lors de l'invasion du Tibet Central par les Dzungars en 1718 en même temps que d'autres monastères 'Brug pa de la vallée[1972]. Il fut surtout rasé, les reliquaires détruits et les reliques et momies dispersées lors de la Révolution Culturelle.

Aujourd'hui, une visite sur les lieux ne révèle que peu de choses de ce à quoi sPre'u zhing pouvait ressembler lorsque les rNgog y vivaient. La vallée de gZhung s'appelle rNam rab, du nom du village en bas de la vallée latérale où se trouvait le temple, sans doute depuis le XVe ou XVIe siècle. La vallée n'est qu'à quelques kilomètres de l'aéroport de Gongkar, dans le comté de Gong dkar (ch. Goṅggá xiàn). Le temple de sPre'u zhing est généralement appelé sPe zhing par les locaux. Le bas de la vallée est une terre fertile. Au-delà des cols à l'extrémité sud se trouve le lac de Yar 'brog g.yu mtsho. Le plus grand village de la vallée est rNam rab zhol, dans lequel se niche le monastère de Dwags po grwa tshang, un monastère Sa skya fondé au XVe siècle par Dwags po paṇ chen bKra shis rnam rgyal. Un peu partout dans la vallée se trouvent des ruines associées au rNgog, mais la localisation de la plupart des temples mentionnés dans cette étude (Ri bo khyung lding, Brag dmar chos 'khor gling et Thar pa gling) demeure incertaine. Il est possible que Ri bo khyung lding se trouvait quelques centaines de mètres au-dessus de sPre'u zhing, où des ruines sont visibles sur Google Maps. Il existe un village nommé Thar pa gling dans le bas de la vallée avec un temple dédié à Dud sol ma, mais aucun des villageois n'a gardé la mémoire des rNgog. Le temple de sPre'u zhing par contre a été rénové une première fois dans les années 1980, et une deuxième restauration a abouti en 2012, avec la construction d'un nouveau temple.

Appendices

La thèse est conclue par cinq appendices. Le premier est une édition diplomatique des deux *Rosaires* accompagnée d'une traduction. Le choix d'une édition combinée a été fait pour permettre une comparaison des deux sources principales de cette étude, qui sont très proches

---

[1967] Tāranātha's *gSung 'bum dpe dur ma*, 1 : 240-241 ; Fermer 2017, 75.

[1968] Snellgrove 1967, 255.

[1969] Ferrari, 55 et 134, n. 334 ; Akester 2016, 254 et 264-267.

[1970] *Diaries of Drag shul Phrin las rin chen*, 1 : 696-697.

[1971] Everding 2011 ; Akester 2016, 266 ; *dBus gtsang gnas yig*, 119-120.

[1972] *rNam rab Guide*, 171 ; Akester 2016, 266.

tout en divergeant sur certains points clés. Dans cette édition, la version commune est en caractères neutres, la version de ST1 en italiques et celle de ST2 en gras. Cette mise en page est conservée dans la traduction proposée sur la page opposée, ce qui permet une lecture simultanée des deux versions, tibétaine et anglaise, du texte.

L'appendice 2 est un tableau regroupant toutes les données sur les membres du lignage héréditaire rNgog à partir de Chos rdor. Cela inclut les différents alias, le titre qui leur est donné dans ST1 et dasn ST2, le nom de leur femme, leur année de naissance, l'âge auquel ils sont morts et leurs dates de vie selon le *lHo rong chos 'byung* et le *Deb ther sngon po*.

L'appendice 3 est un index combiné des sources principales utilisées pour cette étude, à savoir le *rNgog slob brgyud dang bcas pa'i gsung 'bum*, le *rNgog chos skor phyogs bsgrigs*, le catalogue de la Chapelle des Seize Arhats à 'Bras spungs, le *'Bri gung bka' brgyud chos mdzod chen mo* et le *bKa' brgyud sngags mdzod*.

L'appendice 4 est un index détaillé de l'édition de 1982 du *bKa' brgyud sngags mdzod*, reprenant tous les titres et auteurs de la collection en les regroupant par cycle.

L'appendice 5 est le présent résumé en français.

La thèse se conclut par une bibliographie divisée en deux parties principales, les sources tibétaines et les sources occidentales. Les premières sont distinguées selon qu'il s'agit des textes historiographiques constituant la source principale de cette étude, des collections décrites dans la thèse et des textes individuels.

Bibliography

Tibetan sources, biographies on the rNgog

’Gos gZhon nu dpal

Deb sngon *Deb ther sngon po*. p. 489-499 [BA, p. 403-413.]

bSod nams dpal (Puṇyaśri)

ST1 “Bla ma rngog pa yab sras rim par byon pa’i rnam thar rin po che’i rgyan gyi phreng ba.” In: LGNT, vol. 22, p. 1-24.
NKSB, vol. 1 (numbered 222 in the collection), pp. 1-34

dPa’ bo 02 gTsug lag phreng ba (1504-1564):

mKhas pa’i dga’ ston *Chos ’byung mkhas pa’i dga’ ston*. Beijing: Mi rigs dpe skrun khang, 1986. (rNgog: pp. 776-779) (W7499).

Padma dkar po (1527-1592)

Pad dkar chos ’byung “Chos ’byung bstan pa’i padma rgyas pa’i nyin byed.” In: *Kun mkhyen padma dkar po’i gsung ’bum*. Darjeeling: Kargyud Sungrab Nyamso Khang, 1973-4. Vol. 2, pp. 1-619. (rNgog: Vol. 2, pp. 459-466). (W10736)

[Rngog] Byang chub dpal (Bodhiśri)(1360-1446)

ST2 “Rje mar pa nas brgyud pa’i rngog gzhung pa yab sras kyi bla ma’i rnam thar nor bu’i phreng ba.” In: LGNT, vol. 22, p. 25-50. NKSB, vol. 1, p. 35-68.

rTa tshag tshe dbang rgyal

Lho rong chos ’byung *Lho rong chos ’byung*. Lha sa: Bod ljongs bod yig dpe rnying dpe skrung khang, 1994. pp. 50-65.

Tshal pa Kun dga’ rdo rje (1309-1364), Dung dkar Blo bzang ’phrin las (1927-1997)

Deb dmar *Deb ther dmar po. The Red Annals (Part I)*. Gangtok: Namgyal Institute of Tibetology, 1961. (rNgog: ff. 32a-33b)

Unknown

ST3 “rJe btsun mar rngog bka’ brgyud kyi mdzad rnam mdor bsdus.” NKSB, vol. 1, pp. 69-90.

Tibetan sources, collections

’Jam mgon kong sprul Blo gros mtha’ yas (1810-1899)

(1974) *bKa’ brgyud sngags mdzod: A Treasury of Precious Teachings of the Mar-pa Bka’-brgyud-pa Tradition*. Palampur: Sungrab Nyamso Gyunphel Parkhang. 6 vols. “Reproduced from a set of the Dpal-spuṅs prints belonging to Gnas-naṅ Dpa'-bo Rin-po-che”

KGND (1982) *bKa' brgyud sngags mdzod*. Paro: Lama Ngodrub and Sherab Drimed. (W20876)

(2004) *bKa’ brgyud sngags mdzod: a collection of sadhanas and empowerments of the mar pa bka’ brgyud tradition gathered and structured by Jamgön Kongtrul Lodrö Thaye*. New Delhi: Shechen Publications. 8 vols. “Reproduced from a set of prints [made from] the dPal spungs xylographs in Eastern Tibet”; “This publication has been supported by a grant from the Tsadra Foundation.”

DND *gDams ngag mdzod*. Paro: Lama Ngodrup and Sherab Drimey, 1979-1981. (W20877)

rGya chen bka’ mdzod. Paro: Ngodup, 1975-1976. (W21808)

RT *Rin chen gter mdzod chen mo*. Paro: Ngodrup and Sherab Drimay, 1976-1980. (W20578)

SByD *Shes bya kun khyab mdzod.* Beijing: Mi rigs dpe skrun khang, 1982. (W1PD95787)

A mes zhabs Ngag dbang kun dga’ bsod nams (1597-1659)

gSung ’bum / dPal sa skya pa chen po sngags ’chang thams cad mkhyen pa ngag dbang kun dga’ bsod nams kyi gsung ’bum. [Kathmandu]: Sa skya rgyal yongs gsung rab slob gnyer khang, 2000. 29 vol. (W29307).

A mgon Rin po che (1943-)

DK-DZO *’Bri gung bka’ brgyud chos mdzod chen mo*. Lhasa: s.n., 2004. 151 vol.

“’Bri gung bka’ brgyud chos mdzod chen mo las rje mar pa’i bka’ ’bum.” In: DK-DZO, vol 5 & 6 (*ca*, *cha*).

Blo gter dbang po (1847-1914)

rGyud sde kun btus *rGyud Sde Kun Btus; Texts Explaining the Significance, Techniques and Initiations of a Collection of One Hundred and Thirty Two Mandalas of the Sa-Skya-Pa Tradition*, Delhi: N. Lungtok & N. Gyaltsan, 1971, 30 vols.

rGyud Sde Kun Btus: Kha Skong: Supplemental Volumes to the 30 Volume Sde-dge Redaction of the Collection of Texts Explaining the Significance, Techniques, and Initiations of the 132 Maṇḍalas of the Sa-Skya-Pa Tradition, New Delhi: Ngawang Topgay, 1979, 2 vols.

dPal brtsegs bod yig dpe rnying zhib ’jug khang (20-21st c.)

DC *’Bras spungs dgon du gzhugs su gsol ba’i dpe rnying dkar chag*. Pe cin: Mi rigs dpe skrun khang, 2004.

NKCK *rNgog chos skor phyogs bsgrigs.* Lha sa: dPal brtsegs bod yig dpe rnying zhib ’jug khang, 2007 (10 vols).

LGNT *Bod kyi lo rgyus rnam thar phyogs bsgrigs*. Zi ling: mTsho sngon mi rigs dpe skrun khang, 2010 (30 vols).

MPSB *Lho brag mar pa lo tsā’i gsung ’bum*. Pe cin: Krung go’i bod rig pa dpe skrun khang, 2011. 7 vol.

NKSB *rNgog slob brgyud dang bcas pa’i gsung ’bum*. Pe cin: Krung go’i bod rig pa dpe skrun khang, 2011. 34 vol.

Nang chen Tshogs gnyis (1966-)

’Brug lugs chos mdzod chen mo. Kathmandu: Drukpa Kagyu Heritage Project, [200?]. 101 vol.

Padma chos rgyal (1876/8-1958/9)(Ed.):

rTsib ri spar ma, dkar rnying gi skyes chen du ma’i phyag rdzogs kyi gdams ngag gnad bsdus nyer mkho rin po che’i gter mdzod rtsibs ri’i par ma. Darjeeling: Kargyu Sungrab Nyamso Khang, 1978-1985. (W20749)

Padma dkar po (1527-1592)

gSung ’bum *Kun mkhyen padma dkar po’i gsung ’bum*. 24 vols. Darjeeling: kargyud sungrab nyamso khang, 1973-1974. W10736

bSre ’pho yig rnying; a Collection of Texts Explaining the Six Practices of Nāropa (nā ro chos drug) according to the Exegesis of the ’Brug-pa dkar-brgyud-pa. Palampur: Phampa Gar Monastery, 1985. W23761.

Tāranātha (1575-1634)

gSung ’bum *Jo nang rje btsun tā ra nā tha’i gsung ’bum dpe bsdur ma*. Ed. by dPal brtsegs bod yig dpe rnying zhib ’jug khang. Pe cin: Krung go’i bod rig pa dpe skrun khang, 2008. 45 vols.

Tsong kha pa Blo bzang grags pa (1357-1419)

rJe tsong kha pa chen po’i gsung ’bum. Beijing: Krung go’i bod rig pa dpe skrun khang, 2012. 18 vols. (W3PD188).

Unknown

Phyag chen rgya gzhung: collected texts of the Mahāmudrā practice translated from Sanskrit representing the tradition which passed in the Mar-pa Bka’-brgyud-pa. (Reproduced directly from an dbu-med manuscript from ’Bri-guṅ Thel). Bir: D. Tsondu Senghe, 1985. (W21554)

Yangs can dgon ris med dpe rnying myur skyob khang (21st c)

ZH4 *gSung ’bum* *Thams cad mkhyen pa zhwa dmar bzhi pa spyan snga chos kyi grags pa'i gsung ’bum*. Pe cin: Krung go’i bod rig pa dpe skrun khang, 2009 (6 vols).

Tibetan sources, individual texts

’Gos Lo tsā ba gZhon nu dpal (1392-1481)
Deb sngon *Deb ther sngon po.* Chengdu: Si khron mi rigs dpe skrun khang, 2002.

’Jam mgon kong sprul Blo gros mtha’ yas (1810-1899)
KGNDdkar chag “Dpal ldan mar rngog bka’ brgyud kyi gser chos rgyud sde rin po che rnams kyi gleng gzhi dang brgyud pa’i yi ge som nyi’i mun sel rin chen zla zer.” In: KGND, vol. 1, p. 1-53.

’Phrin las rgya mtsho (19th c. ’Brug pa bKa’ brgyud master)
Bla ma brgyud pa’i rnam thar ngo mtshar zla ba’i me long. Ed. by Khenpo Shedup Tenzin. Plouray: Drukpa Plouray, 2009. Part on the rNgog pp. 345-350.

A mes zhabs Ngag dbang kun dga’ bsod nams (1597-1659)
“dPal rdo rje nag po chen po’i zab mo’i chos skor rnams byung ba’i tshul legs par bshad pa bstan srung chos kun gsal ba’i nyin byed.” In: *gSung ’bum*. Vol. 25, pp. 1-492.

A mgon Rin po che (1943-), editor
“ngam rdzong ras pa’i rnam thar don bdun.” In: DK-DZO. Vol 63: pp.153-162.

A ba dhū ti pa Rin chen rnam rgyal (composed 1479).
KP *rNam thar* “dPal ldan bla ma dam pa’i mdzad pa rmad du byung ba ngo mtshar bdud rtsi’i thigs pa.” In: *rGyal dbang kun dga’ dpal ’byor ba’i gsung ’bum*. Thimphu: Kunzang Tobgey, vol. 1, pp. 7-67. (W10954)

bDud ’joms ’Jigs bral ye shes rdo rje (1904-1988)
“bKa’ brgyud sngags mdzod kyi smin grol rgyab brten dang bcas pa ji ltar nod pa’i tshul.” In: *gSung ’bum*. Kalimpong: Dupjung Lama, 1979-1985. (W20869).

’Be lo Tshe dbang kun-khyab (18th century), **Si tu 08 Chos kyi ’byung gnas** (1700-1774):
Rosary of Crystal Gems: *Sgrub brgyud karma kaṃ tshang brgyud pa rin po che’i rnam par thar pa rab ’byams nor bu zla ba chu shel gyi phreng ba kha skong bcas*. Acharya Sempa Dorje (ed.). New Delhi: Shri Diwakar Publication, 2011. Mar-pa: vol. 1/3, pp. 59-73.

Blo gter dbang po (1847-1914)
“rGyud sde rin po che kun las btus p’i thob yig de bzhin gshegs pa thams cad kyi gsang ba ma lus pa gcig tu ’dus pa rdo rje rin po che’i za ma tog.” In: GDKT, vol. 30, p. 1-237.

bSod nams grags pa (1478-1454)
bKa’ gdams gsar rnying gi chos’byung. lHa sa: Bod ljongs bod yig dpe rnying dpe skrun khang, 2001.

bsTan ’dzin Padma’i rgyal mtshan, ’Bri gung Che tshang 04 (1770-1826)

’Bri gung gdan rabs *’Bri gung gdan rabs gser phreng: nges don bstan pa’i snying po mgon po ’bri gung pa chen po’i gdan rabs chos kyi byung tshul gser gyi phreng ba.* lHa sa: Bod ljongs bod yig dpe rnying dpe skrun khang, 1989

Bu ston rin chen grub (1290-1364):

gSang ’dus chos ’byung “gSang ba ’dus pa’i rgyud ’grel gyi bshad thabs kyi yan lag gsang ba’i sgo ’byed.” In: *Bu ston rin chen grub dang sgra tshad pa rin chen rnam rgyal gyi gsung ’bum*. New Delhi: International Academy of Indian Culture, 1965-1971. Vol. 9, pp. 1-106. (TBRC W22106).

Bu ston *gsan yig* “Bla ma dam pa rnams kyis rjes su gzung ba’i tshul bka’ drin rjes su dran par byed pa.” In: *Bu ston rin chen grub dang sgra tshad pa rin chen rnam rgyal gyi gsung ’bum*. New Delhi: International Academy of Indian Culture, 1965-1971. Vol. 26, pp. 1-206. (TBRC W22106).

Bu ston’s *Yogatantra* “rNal ’byor rgyud kyi rgya mtshor ’jug pa’i gru gzings.” In: *The Collected Works of Bu ston*. New Delhi: International Academy of Indian Culture, 1965-1971. Vol. 11, pp. 1-184.

Byang chub bzang po (16th century):

BCZP “Brgyud pa yid bzhin nor bu rnam par thar pa.” In: *Bde mchog mkha’ ’gro snyan rgyud (ras chung snyan rgyud): A manuscript collection of orally transmitted precepts focussing upon the tutelaries Cakrasamvara and Vajravārāhī*. New Delhi: [s.n.], 1973. 2 vol. (Mar-pa: pp. 63-96)(W24891)

Byang chub rnam rgyal dge legs (15-16th c.)

Byams pa gling pa’i rnam par thar pa ngo mtshar phreng ba. dBu med manuscript, 95 folios (W26621).

Chos kyi ye shes (dge slong)(13th c.?)

“Chos rje smar pa’i rnam thar.” In: *sMar pa bka’ brgyud kyi rnam thar phyogs bsgrigs*. Chengdu: Si khron mi rigs dpe skrun khang, 2006 (W00EGS1017393)

Dalai bla ma 05 Ngag dbang blo bzang rgya mtsho (1617-1682).

Tshar chen rnam thar “Tshar chen rdo rje ’chang gi rnam thar bstan pa’i nyi ’od.” In: *Lam ’bras slob bshad*. Dehra Dun: Sakya Centre, 1983-1985. Vol. 2, pp. 399-637. (TBRC W23649)

DL5 *Thob yig* “Zab pa dang rgya che ba'i dam pa'i chos kyi thob yig gang ga'i chu rgyun.” In: *gSung ’bum*, vol. 1-4. Gangtok: Sikkim Research Institute of Tibetology, 1991-1995. (W294)

mGon po bSod nams mchog ldan rnam thar “Dus gsum rgyal ba’i mkhyen brtse nus pa’i rang gzugs dkyil ’khor rgya mtsho’i gtso bo khyab bdag rdo rje sems dpa’i ngo bo mgon po bsod nams mchog ldan bstan pa’i rgyal mtshan dpal bzang po’i rnam par thar pa ngo mtshar dad pa'i rlabs phreng.” vol. 11: 246-387. In: *rGyal dbang lnga pa ngag dbang blo bzang rgya mtsho’i gsung ’bum*. Pe cin: Krung go’i bod rig pa dpe skrun khang, 2009.

dGe ye Tshul khrims seng ge (15th c.)

dGe ye History dGe ye Mkhas btsun, Miyake Shiníchiro, Iuchi Maho et Mekata Shoko, *History of Indo-Tibetan Buddhism by dGe ye Tshul Khrims seng ge = dGe ye Tshul khrims seng ges mdzad pa'i rgya bod kyi chos 'byung rin po che: a critical and facsimile edition of the Tibetan text with Summary and Index*, Otani: SBCRI, 2007. rNgog: p. 48 (=30v).

Dil mgo mKhyen brtse bKra shis dpal 'byor (1910-1991)

"bKa' brgyud sngags mdzod kyi dbang khrid lung dang bcas pa'i thob yig rgyud sde rin po che'i gter mdzod." In: *gSung 'bum*. Delhi: Shechen Publications, 1994. Vol. 25, p 48 - 66. (W21809).

Drag shul 'phrin las rin chen

rDo rje 'chang drag shul phrin las rin chen gyi rtogs brjod. Dehra Dun: Sakya Center, 1974. 2 vols. TBRC W27318

dPa' bo 02 gTsug lag phreng ba (1504-1564):

dPa' bo II *rJe btsun mar pa'i rnam par thar pa grub pa'i ngo mtshar brjod pa*. [s.n.], 1563. 69 ff. (W27459)

Dung dkar Blo bzang 'phrin las (1927-1997)

Dung dkar tshig mdzod chen mo. beijing: Krung go'i bod rig pa dpe skrun khang, 2002.

Dwags po'i paṇḍi ta karma phrin las

Kun mkhyen bkra shis rnam rgyal gyi rnam par thar pa ngo mtshar gyi rgya mtsho. Kathmandu: sa skya rgyal yongs gsung rab slob gnyer khang /, 2008

gLing ras pa Padma rdo rje (1128-1188)

"Grub thob bka' bzhi'i lo rgyus." In: *'Brug lugs chos mdzod chen mo*, vol. 47, 1-11.

See also: In: *bSre 'pho yig rnying*. Palampur: Khampa Gar Monastery, 1985. pp. 11-16. (TBRC W23761)

See also: In: *dPal 'brug pa'i zab khrid phyogs bsdebs*, vol. 1, pp. 68-77.

Gong dkar ba Kun dga' rnam rgyal (1432-1496):

Gong dkar gsan yig *rDzong pa kun dga' rnam rgyal gyi gsan yig*. [Kathmandu?]: rGyal yongs sa chen dpe skrun khang, [2005]. (W30192)

Kaḥ thog Rig 'dzin Tshe dbang nor bu (1698-1755):

"Mar mi dwags po jo rje yab sras sogs dam pa 'ga' zhig gi rnam thar sa bon dus kyi nges pa brjod pa dag ldan nyung gsal." In: Kah thog rig 'dzin tshe dbang nor bu'i bka' 'bum. Beijing: Grung go'i bod rig pa dpe skrun khang, 2006. Vol. 3, pp. 640-656 (Mar-pa: 640-648)

Karma pa 03 Rang byung rdo rje (1284-1339)

K3 Tanjur "Rje rang byung rdo rje'i thugs dam bstan 'gyur gyi dkar chag." In: *Karma pa rang byung rdo rje'i gsung 'bum*. Xining: [Mtshur phu Mkhan po Lo yag Bkra shis], 2006. Vol. 4, pp. 415-594.

mDo sngags gzhung chen brgyad: brTag gnyis rnam bshad dri med 'od. Seattle: Nitartha International, 2006.

Karma pa 08 Mi bskyod rdo rje (Ed.)(1507-1554)

mGur mtsho *bKa' brgyud mgur mtsho, mchog gi dngos grub mngon du byed pa'i myur lam bka' brgyud bla ma rnams kyi rdo rje'i mgur dbyangs ye shes char 'bebs rang grol lhun grub bde chen rab 'bar nges don rgya mtsho'i snying po*. Rum btegs: Karma chos sgar, 1972. (W21962)

Kaḥ thog Si tu Chos kyi rgya tsho (1880-1923)

dBus gtsang gnas yig Gangs ljongs dbus gtsang gnas skor lam yig nor bu zla shel gyi so do. Lha sa: Bod ljongs mi dmangs dpe skrun khang, 1999.

Karma 'phrin las pa (1456–1539).

"Kun mkhyen bkra shis rnam rgyal gyi rnam par thar pa ngo mtshar gyi rgya mtsho." In: *Sa skya pa'i bla ma kha shas kyi rnam thar: Biography of Some Sa-skya-pa Masters*. 3 vols. [Kathamndu]: Sa skya rgya yongs gsung rab slob gnyer khang, 2008, vol. 2 (*kha*), pp. 255–363.

Khams sprul 08 Don grub nyi ma (1931-1979)

" bKa' brgyud sngags mdzod kyi dbang khrid lung dang bcas pa'i thob yig rgyud sde rin po che'i gter mdzod." *gSung 'bum*. Palampur: Sungrab Gyunphel Parkhang, 1975-1985. Vol. 5, pp. 465 - 482. (W24027)

Krang dbyi sun (Zhang Yisun, 1893-1983)

Bod rgya tshig mdzod chen mo. Beijing: Mi rigs dpe skrun khang, 1993. 2 vols.

Kun dga' grol mchog (1507-1565)

A collection"rNam thar zur 'debs mdzes rgyan rin po che's lung yig." In: *Kun dga' grol mchog blo gsal rgya mtsho'i gsung 'bum*. New Delhi: Tibet House, 1982. Vol. 2, p. 535-584. (TBRC W4CZ15391)

"rNam thar yang rgyan nor bu'i phra bkad." In: *Kun dga' grol mchog blo gsal rgya mtsho'i gsung 'bum*. New Delhi: Tibet House, 1982. Vol. 2, p. 585-674.

Las chen Kun dga' rgyal mtshan (1432-1506)

bKa' gdams chos 'byung gsal ba'i sgron me. Reproduced from a Khampa dbu-med manuscript. New Delhi: B. Jamyang Norbu, 1972. 2 vols.

Mar ston Tshul khrims 'byung gnas (12th century)

KSTC "Sgra bsgyur chen po mar pa'i rnam par thar pa." In: *Bka' brgyud gser phreng chen mo [Biographies of Eminent Gurus in the Transmission lineage of*

teachings of the ’ba’ ra dkar brgyud pa sect]. Dehradun: Ngawang Gyaltsen and Ngawang Lungtok, 1970. 1: 149-202. (W19231)

Mon rtse pa Kun dga’ dpal ldan (1407-1475):
Dkar brgyud gser phreng: A Golden Rosary of Lives of Eminent Gurus. Leh: Sonam W. Tashigang, 1970. pp. 83-103. (W30123)

Mu dge bSam gtan rgya mtsho (1914-1993)
“Bod kyi lo rgyus kun dga’ me long.” In: *gSung ’bum*. Zi ling: mTsho sngon mi rigs dpe skrun khang, 1997. Vol. 3, pp. 1-383.

Mi bskyod rdo rje
“rJe bstun mar pa lo tsā'i rnam thar ngo mtshar sa ma ya.” In: MPSB-1, vol. 1, p. 159-163.

mKhas btsun bzang po
“bKa' brgyud bla ma brgyud pa rjes ’drangs dang bcas pa'i rnam thar sgrub brgyud rin chen phreng ba.” In: *rGya bod mkhas grub rim byon gyi rnam thar phyogs bsgrigs; Biographical Dictionary of Tibet and Tibetan Buddhism*. Dharamsala: Library of Tibetan Works and Archives, 1973-1990. (rNgog, 7: 7-20).

Nam mkha’ bsod nams
rDog rabs gsal ba'i me long. *Dbu med* manuscript catalogued under C.P.N. catalogue no. 002813(2). 47ff. (W2CZ7699)
“rDog rabs gsal ba’i me long.” In: *Bod kyi gdung rabs dang rnam thar thung ngu khag drug*. (Gangs can rig mdzod, vol. 73). lHa sa: Bod ljongs bod yig dpe rnying dpe skrun khang, 2013. pp. 141-206.
“rDog rabs gsal ba’i me long nyi zla’i ’od ’phro.” In: LGNT, 40: 417-509.

Ngor chen 01 Kun dga’ bzang po (1382-1456)
Ngor chen thob yig “thob yig rgya mtsho.” In: *gSung ’bum*. [Dehra Dun]: [Sakya Centre], [199?]. Vol. 1, pp. 181-436. (W11577)

Pho brang po ta la do dam khru'u rig dngos zhib ’jug khang
Potala Catalog *Pho brang po ta lar tshags pa'i bka' brgyud pa'i gsung ’bum dkar chag*. Lhasa: Bod ljongs mi dmangs dpe skrun khang, 2007.

Phur bu lcog ngag dbang byams pa (1682-1762)
“Grwa sa chen po bzhi dang rgyud pa stod smad chags tshul pad dkar ’phreng ba.” In: *dKar chag khag gsum*. New Delhi, Gedan Sungrab Minyam Gyunphel, 1970. (W4CZ2732)

Phur bur rdo rje (b. 20th c.) and Ngag dbang dkon mchog (20th c.)

"lHo kha gong dkar sprel zhing du gnas pa'i rngog chos brgyud pa'i gdan sa'i byung ba dang 'brel yod skor bshad pa." *Bod ljongs zhib 'jug*, 2012.2. Pe cin: Bod ljong spyi tshogs tshan rig khang.

rGod tshang ras pa sNa tshogs rang grol (1482-1559)

bDe mchog spyi bshad theg mchog bdud rtsi'i dga' ston ye shes chen po'i sman mchog. Bir: D. Tsondru sengge, 1982. (W21140)

gTsang smyon he ru ka phyogs thams cad las rnam par rgyal ba'i rnam thar rdo rje theg pa'i gsal byed nyi ma'i snying po. New delhi: sharada rani, 1969. (W1KG9090)

rGyal mtshan phun tshogs, dPal spungs shes rab gling mkhan po (21st century)(Ed.)

sGra bsgyur chos kyi rgyal po mnga' bdag mar pa lo tsā ba chos kyi blo gros mchog gi rnam thar mthong ba don ldan. Palpung Sungrab Partrun Khang, 2012.

rGya ston Byang chub dbang rgyal

Gong dkar ba rnam thar *rDzong pa kun dga' rnam rgyal gyi rnam thar*. lHa sa: Shang kang then mā dpe skrun khang, 2001. (W15269)

rNam rab Ngag dbang thub bstan (b. 20th c.)

rNam rab Guide *rNam rab mthong smon dwags po grwa tshang gi lo rgyus*. (rNam rab mthong smon dwags po grwa tshang gi gsung rab dpe tshogs, 7). Pe cin: Mi rigs pe skrun khang, 2014.

Sangs rgyas 'bum, 'Bras mo Jo btsun (Early 13th century):

Rwa lung gser phreng "Skyes mchog mar pa lo tsa'i rnam thar dri med mthong ba don ldan." In: *Rwa lung dkar brgyud gser phreng*. Palampur: Sungrab Nyamso Gyunphel Parkhang, Tibetan Craft Community, 1975. 4 vols. (Mar pa: vol. 1, pp. 138-165). (W19222)

Sangs rgya rgya mtsho, sDe srid (1653-1705)

dGa' ldan chos 'byung baidu̱ rya ser po. Beijing: Krung go bod kyi shes rig dpe skrun khang, 1989. (W8224)

sGam po pa bSod nams rin chen (1079-1153):

"Rje mar pa dang rje btsun mi la'i rnam thar." In: *Khams gsum chos kyi rgyal po dpal mnyam med sgam po pa 'gro mgon bsod nams rin chen mchog gi gsung 'bum yid bzhin nor bu.* Kathmandu: Khenpo Shedup Tenzin and Lama Thinley Namgyal, 2000. Vol. 1., pp. 25-46 (W23439)

Shes rab rgya mtsho, A khu ching (1803-1875):

"Rngog dkyil bdun las brtsams pa'i gtam du brjod bsnyan bskul lha'i rnga sgra." In: *Gsung 'bum*. "Reproduced from a tracing of a print from the Lhasa New Zhol blocks belonging to Glin Rin-po-che by Ngawang Sopa." New Delhi: Ngawang Sopa, vol 2, pp. 829-834. (W21504)

sKal bzang chos ’phel (20th c.)

dGong dkar chos sde’i gnas yig (Gongkar Chode Monastery Guide Book). Gong dkar: Gong dkar chos sde dgon, unkown date.

sTag lung khri 17 Ngag dbang rnam rgyal (1571-1626):

sTag lung chos ’byung *Chos ’byung ngo mtshar rgya mtsho: A detailed account of the development of Buddhism in Tibet with special emphasis on the Stag-lung Bka’-brgyud-pa*. Palampur: Sungrab Nyamso Gyunpel Parkhang, 1972. (W23745)

Tāranātha

“rGyud rgyal gshin rje gshed skor gyi chos ’byung rgyas pa yid ches ngo mtshar.” In: *gSung ’bum dpe dur ma*. Vol. 11: 1-138.

See also: In: *gSung ’bum (rTag brtan phun tshongs gling gi par ma*). W22277. Leh: C. Namgyal & Tsewang Taru, 1982-1987. Vol. 10, 1-147.

Tshar chen Blo gsal rgya mtsho (1502-1566/67)

“dPal ldan lha mo ’dod pa khams kyi dbang phug ma ’jigs byed dud pa’i sol ba can gyi chos skor gyi dkar chag snyan brgyud gsal ba’i me long.” In: KGND, 6: 53-67.

Rje btsun rdo rje rnal ’byor ma nā ro mkha’ spyod kyi sindhu ra’i dkyil ’khor sgrub mchod bdag ’jug gi cho ga mkha’ spyod sgrub pa’i nye lam gyi lhan thabs dkyus su bcug pa nag ’gros bklag chog gsal ba’i me long, [s.l.]: [s.n.], 1968.

Ye shes sengge (12th c.)

Rwa lo tsa ba'i rnam thar kun khyab snyan pa'i rnga sgra. Zi ling: mTsho sngon mi rigs dpe skrun khang, 1989.

Zhwa dmar 02 mKha’ spyod dbang po Dri med dpal ye shes (1350-1405):

“Chos kyi rje mnga’ bdag mar pa lo tstsha’i rnam par thar pa gsang ba mdzod kyi lde mig.” In: *Bde mchog snyan brgyud kyi rnam thar skor* (*bde mchog sñan brgyud biographies*). Darjeeling: Kargyud Sungrab Nyamso Khang, 1983. pp. 1-131. (W21145)

Zhwa dmar 04 Chos grags ye shes (1453-1524)

“dPal ldan bla ma dam pa mkhan chen thams cad mkhyen pa don gyi slad du mtshan nas smos te gzhon nu dpal gyi rnam par thar pa yon tan rin po che mchog tu dgyes pa'i ljon pa.” In: *Zh4 gSung ’bum*, vol. 1, 469-564.

“rje thams cad mkhyen pa lo tsā ba chen po’i rnam par thar pa ngo mtshar rgya mtsho.” In: *Zh4 gSung ’bum*, vol. 4, pp. 272-458.

“Gu’i shri dpal ’byor don grub nas bzung ste bla ma rnams la dbang lung gsan yig.” In: *ZH4 gSung ’bum*, vol. 6, pp. 705-874.

“rTogs pa brjod pa’i tshigs sub cad pa utpa la’i phreng ba.” In: *ZH4 gSung ’bum*, vol. 6, pp. 931-996.

European languages sources

Achard Jean-Luc, 2012. “Zhang ston bKra shis rdo rje (1097-1167) et la continuation des Essences Perlées (sNying thig) de la Grande Perfection. In: Charles Ramble & Jill Sudbury (eds), *This World and the Next: Contributions on Tibetan Religion, Science and Society, PIATS: Tibetan Studies, Proceedings of the Eleventh Seminar of the International Association for Tibetan Studies*. (Beiträge zur Zentalasienforschung, Tibet Institut, . pp. 233-266.

Akester Matthew, 2016. *Jamyang Kyhentsé Wangpo's Guide to Central Tibet*. Chicago: Serindia Publications.

Aris Michael, 1979. *Bhutan: The Early History of a Himalayan Kingdom*. Warminster: Aris & Phillips Ltd.

_____ 1988. “New Light on an Old Clan of Bhutan: The sMyos-rabs of Bla-ma gSang-sngags.” In: Helga Uebach and Jampa L. Panglung (eds), *Tibetan Studies.* Munich: Bayrische Akademie der Wissenschaften, pp. 15-24.

Ary Elijah 2015. *Authorized Lives: Biography and the Early Formation of Geluk Identity.* Boston: Wisdom Publications.

Aurell Martin (ed.), 2004. *Le Médiéviste et la monographie familiale : sources, méthodes et problématiques. Actes du colloque de Poitiers, 20-22 novembre 2003*. Turnhout: Brepols.

Aziz Barbara Nimri, 1978. *Tibetan Frontier Families: Reflections of Three Generations from D’ing-ri*. New Delhi: Vikas Publishing House.

Barry Laurent S., Bonte Pierre, Govoroff Nicolas, Jamard Jean-Luc, Mathieu Nicole-Claude, Porqueres i Gené Enric, D’Onofrio Salvatore, Wilgaux Jérôme, Zempléni András et Zonabend Françoise, « Glossaire », *L’Homme*, 154-155, avril-septembre 2000, p. 721-732.

Béguin Gilles, 2013. *Art sacré du Tibet: Collection Alain Bordier*. Suilly-La-Tour: Editions Findakly.

Bhattacharyya Benoytosh (ed.), 1925 and1928. *Sādhanamālā*. Baroda: Central Library. 2 vols.

Bischoff, Frederic, 1956. *Contributions a l'étude des divinités mineures du bouddhisme tantrique: Ārya-Mahābala-nāma-mahāyānasūtra*. Paris: Geuthner.

Bourdieu Pierre, 1971. « Une interprétation de la théorie de la religion selon Max Weber. » *European Journal of Sociology*, 12, pp. 3-21.

_____ 1972 (2000). *Esquisse d’une théorie de la pratique, précédé de Trois études d’ethnologie kabyle.* Paris, Seuil. [= *Algeria 1960: The Disenchantment of the World: The Sense of Honour: The Kabyle House or the World Reversed: Essays*. Cambridge University Press 1979.]

_____ 1972. « Les stratégies matrimoniales dans le système de reproduction. » *Annales. Economies, Sociétés, Civilisations.* 27e année, n. 4-5, 1972, pp. 1105-1127.

_____ 1986. « L’illusion biographique ». *Actes de la recherche en sciences sociales*, vol. 62-63, pp. 69-72.

_____ 1986. “The forms of capital.” trans. Richard Nice, chapter 9 in John G. Richardson (ed.), *Handbook of Theory and Research for the Sociology of Education*. Westport: Greenwood Press, pp. 241-259.

_____ 1987. *Choses dites.* Paris: Les Editions de Minuit.

_____ 1993. *The Field of Cultural Production: Essays on Art and Litterature.* Ed. by Randal Johnson. New York: Columbia University Press.

_____ 2007. « La noblesse : capital social et capital symbolique. In: Lancien Pierre et Monique de Saint-Martin (dir.), *Anciennes et nouvelles aristocraties*. Paris: Edition de la Maison des sciences de l'Homme.

_____ 2015. *Sociologie générale, volume 1. Cours au Collège de France 1981-1983.* Paris: Raisons d'Agir/Seuil.

_____ 2016a. *Sociologie générale, volume 2. Cours au Collège de France 1983-1986.* Paris: Raisons d'Agir/Seuil.

_____ 2016b. *Manet, une révolution symbolique. Cours au Collège de France (1998-2000) suivis d'un manuscrit inachevé de Pierre et Marie-Claire Bourdieu*. Paris: Seuil.

Boureau Alain, 1984. *La* Légende dorée *Le système narratif de Jacques de Voragine.* Paris: Cerf.

Braudel Fernand, 1949. *La Méditerranée et le Monde méditerranéen à l'époque de Philippe II*. Paris: Librairie A. Colin. [*The Mediterranean and the Mediterranean World in the Age of Philip II*. transl. from the French by Siân Reynolds. London: Fontana/Collins, 1976]

Brunnhölzl Karl, 2007. *Straight from the Heart: Buddhist Pith Instructions.* Boulder: Snow Lion Publications.

Buffetrille Katia, 2014. "The Pilgrimage to Mount Kha ba dkar po: A Metaphor for bardo?" In: Christoph Cueppers & Max Deeg (eds.), *Searching For The Dharma, Finding Salvation – Buddhist Pilgrimage In: Time And Space*. Lumbini: Lumbini International Research Institute, pp. 197-277.

Cabezón José Ignacio, 2013. *The Buddha's doctrine and the nine vehicles: Rog Bande Sherab's Lamp of the teachings*. Oxford: Oxford University Press.

Cantwell Cathy, 1989. "An Ethnographic Account of the Religious Pratice in a Tibetan Buddhist Refugee Monastery in Northern India." PhD thesis, University of Kent. 2 vols.

Cassinelli William and Robert Ekvall, 1969. *A Tibetan Principality: the Political System of Sa sKya*. Ithaca: Cornell University Press.

Certeau Michel de, 2011 [1975]. *L'écriture de l'histoire*. Paris: Gallimard.

Chan Victor, 1994. *Tibet Handbook*. Chico: Moon Publications.

Clarke Shayne, 2014. *Family Matters in Indian Buddhist Monasticisms*. Honolulu: University of Hawai'i Press.

Covill Linda, Roesler Ulrike and Shaw Sarah (eds.), 2010. *Lives Lived, Lives Imagined: Biography in the Buddhist Traditions*. Boston: Wisdom Publications.

Cuevas Bryan J, 2015a. *The All-Pervading Melodious Drumbeat: The Life of Ra Lotsawa*. Penguin Classics.

____ 2015b. "Rva *Lo tsā ba* and His Biographers." In: Olaf Czaja & Guntram Hazod (eds.), *Festschrift for Per K. Sørensen on the Occasion of His 65th Birthday*. Wiesbaden: Dr. Ludwig Reichert Verlag. pp. 57-78.

Czaja Olaf, 2013. *Medieval Rule in Tibet: The Rlangs Clan and the Political and Religious History of the Ruling House of Phag mo gru pa. With a Study of the Monastic Art of Gdan sa mthil*. Wien: Verlag der Österreichischen Akademie der Wissenschaften.

Czaja Olaf and Adriana Proser (eds.), 2014. *Golden Visions of Densatil. A Tibetan Buddhist Monastery*. New York: Asia Society Museum, pp. 17-56.

Dalton Jacob, 2005. “A Crisis of Doxography: How Tibetans Organized Tantra during the 8th–12th Centuries.” *Journal of the International Association of Buddhist Studies*. 28/1 (2005). pp. 115-181.

____ 2011. *Taming of the Demons: Violence and Liberation in Tibetan Buddhism*. New Haven: Yale University Press.

Davidson Ronald, 1981. “The *Litany of Names of Mañjuśrī*: Text and Translation of the Mañjuśrīnāmasaṃgīti.” In: Michel Strickmann (ed.), *Tantric and Taoist Studies in Honour of R.A. Stein*. (Mélanges Chinois et Bouddhiques, vol. XX), pp. 1-69.

____ 2002. *Indian Esoteric Buddhism: A Social History of the Tantric Movement.* New York: Columbia University Press.

____ 2005. *Tibetan renaissance: Tantric Buddhism in the rebirth of Tibetan culture*, New York: Columbia University Press.

Decleer Hubert, 1992. “The Melodious Drumsound All-Pervading, Sacred Biography of Rwa Lotsâwa: About Early Lotsâwa rnam thar and chos ’byung.” In: *Tibetan Studies: Proceedings of the 5th International Association of Tibetan Studies Seminar*. Ed. by Shōren Ihara, and Zuihō Yamaguchi. Narita: Naritasan Institute for Buddhist Studies. Vol. 1, pp. 13-28.

____ 1994-5. “Bajracharya Transmission in XIth Century Chobar: Bharo ’Maimhand"s main disciple Vajrakirti, the translator from Rwa.” *Buddhist Himalaya: Journal of Nāgārjuna Institute of Exact Methods*, vol. 6(1-2), pp. 1-17. Also available online: http://buddhim.20m.com/6-1.htm (accessed 23/01/2015)

____ 1995. “The Sacred Biography of Bharo ’Maimed Hand,’ a Tenth-Century Bajracharya from Patan.” In: Ratna Jyoti (ed.), *Oku Bahal Commemorative Volume*. Lalitpur: 2538th Buddha Jayanti Organising Committee, pp. 95-104.

Delecroix Christian, Dosse François, Garcia Patrik and Offenstadt Nicolas, 2010. *Historiographies : Concepts et débats.* Paris: Gallimard. 2 vols.

Dhongthog Rinpoche, 2016. *The Sakya School of Tibetan, Buddhism: A History.* Tr. by Sam van Schaik. Somerville: Wisdom Publications.

Doney Lewis, 2016. “A Richness of Detail: Sangs rgyas gling pa and the *Padma bka’ thang*.” *Revue d'Etudes Tibétaines*, 37, pp. 69-97.

Dosse François, 2005 [2011]. *Le pari biographique : Ecrire une vie*. Paris: La Découverte.

____ 2010. “Biographie, prosopographie.” In: *Historiographies : Concepts et débats*. Paris: Gallimard, pp. 79-85.

Dotson Brandon, 2004. “A note on *zhang*: maternal relatives of the Tibetan royal line.” *Journal Asiatique*, 292.1–2 (2004), pp. 75-99.

____ 2006. “Administration and Law in the Tibetan Empire: The Section on Law and State and its Old Tibetan.” Oxford: University of Oxford.

____ 2009. *The Old Tibetan Annals: an Annotated Translation of Tibet’s First History, with an Annotated Cartographical Documentation by Gutram Hazod.* Wien: Verlag der Österreichischen Akademie der Wissenschaften.

Dowman Keith, 1986. *Masters of Mahamudra: Songs and Histories of the Eighty-four Buddhist Siddhas*. Albany: State University of New York Press.

Dreyfus Georges, 2005. “Saṃgha: Saṃgha and Society in Tibet.” In: Lindsay Jones (ed.), *Encyclopedia of Religion (Second Edition)*. Thomson-Gale, Vol. 12, pp. 8081-8086.

Also online http://www.encyclopedia.com/environment/encyclopedias-almanacs-transcripts-and-maps/samgha-samgha-and-society-tibet

Dreyfus Georges and Drongbu Tsering, 2010. "Pa tshab and the Origin of Prāsaṅgika." *JIABS* 32:1-2 2009 (2010), pp. 387-417.

Dubois Jacques, Pascal Durand and Yves Winkin, 2013. « Aspects du symbolique dans la sociologie de Pierre Bourdieu ». *COnTEXTES, Varia*. http://contextes.revues.org/5661 (accessed 2017.09.26)

Ducher Cécile, 2015. Review of Quintman Andrew, 2014. *The Yogin and the Madman: Reading the Biographical Corpus of Tibet's Great Saint Milarepa*. New York: Columbia University Press. *Bulletin of SOAS* 78/01, pp. 214-216.

____ 2016a. "bKa' brgyud Treasure and rNying ma Revealer: The *Sras mkhar ma* of Mar pa Lo tsā ba." *Revue d'Etudes Tibétaines*, 37, pp. 98–126.

____ 2016b. "Structuration d'un lignage religieux au Tibet Médiéval : le clan Ngok." Éditions du CTHS (electronic edition).

____ 2017. *Building a Tradition: the Lives of Mar-Pa the Translator*. München: Indus Verlag.

____ Forthcoming. "From song to biography and from biography to song: the use of *mgur* in Mar-pa's *rnam thar*." In: Lucia Galli and Franz Xaver Erhard (eds), *Proceedings of the Conferences* Beyond Biography *and* Global Lives and Local Perspectives (*Wolfson College, Oxford, 2012 and 2017*).

Dudjom Rinpoche Jikdrel Yeshe Dorje, Gyurme Dorje and Kapstein Matthew (ed.), 1991. *The Nyingma school of Tibetan Buddhism: its Fundamentals and History*. Boston: Wisdom publications.

Eckel Malcolm David, 1987. *Jnanagarbha's Commentary on the Distinction Between the Two Truths*. New York: SUNY Press.

Ehrhard Franz-Karl, 1993 (2013). "The 'Vision' of rDzogs-chen: A Text and its Histories." In: *Buddhism in Tibet & the Himalayas: Texts and Traditions*. Kathmandu: Vajra Publications. pp. 35-51.

____ 2001a (2013). "Religious Geography and Literary Traditions: the Foundation of the Monastery of Brag-dkar bSam-gling." In: *Buddhism in Tibet & the Himalayas: Texts and Traditions*. Kathmandu: Vajra Publications. pp. 229-238.

____ 2001b (2013). "Concepts of Religious Space in Southern Mustang: The Foundation of the Monastery sKu-tshab gter-lnga." In: *Buddhism in Tibet & the Himalayas: Texts and Traditions*. Kathmandu: Vajra Publications. pp. 218-228.

____ 2002a. *A Buddhist Correspondence: The Letters of Lo-Chen Bsod-Nams-Rgya-Mtsho: Facsimile Edition of a 15th Century Tibetan Manuscripts*. Lumbini: Lumbini International Research Institute.

____ 2002b. *Life and Travels of Lo-Chen Bsod-Nams Rgya-Mtsho*. Lumbini: Lumbini International Research Institute. `

____ 2004. "Spiritual Relationships Between Rulers and Preceptors: The Three Journeys of Vanaratna (1384-1468) to Tibet". In: *The Relationship Between Religion and State (chos srid zung 'brel) in Traditional Tibet. Proceedings of a Seminar held in Lumbini, Nepal, in March 2000*. Lumbini: Lumbini International Research Institute. pp. 245-265.

____ 2010. "Editing and Publishing the Master's Writings: The Early Years of rGod tshang ras chen (1482-1559)." In: Anne Chayet et al (eds), *Edition, éditions: l'ecrit au Tibet, évolution et devenir*. München: Indus verlag. pp. 129-161.

____ 2012. "'Flow of the River Gaṅgā': The gSan-yig of the Fifth Dalai Bla-ma and its Literary Sources." In: *Studies on the History and Literature of Tibet and the Himalaya*. Kathmandu: Vajra Publications. pp. 79-96.

____ 2013. *Buddhism in Tibet & the Himalayas: Texts and Traditions*. Kathmandu: Vajra Publications.

Eimer Helmut, 1975. *Tibetica Upsaliensia: Handliste der tibetischen Handschriften und Blockdrucke in der Universtätsbibliothek zu Uppsala*. Stockholm: Almqvist & Wiksel.

Everding Karl-Heinz, 2008. *Tibetische Handschriften und Blockdrucke (14), Die mTshur-phu-Ausgabe der Sammlung Rin-chen gter-mdzod chen-mo, nach dem Exemplar der Orientabteilung, Staatsbibliothek zu Berlin Preussischer Kulturbesitz, Hs or 778, Bände 52*. Stuttgart: Franz Steiner.

____ 2009. "gSang phu Ne'u thog. Tibet's Earliest Monastic School (1073). Reflections on the Rise of its Grva tshang bcu gsum and Bla khag bcu." *Zentralasiatische Studien*, vol. 38, pp. 137-154.

Evers Hans-Dieter, 1967. "Kinship and Property Rights in a Buddhist Monastery in Central Ceylon." *American Anthropologist*, 69/6, pp. 703–710.

Fermer Mathias, 2009. "The Life and Works of Gong dkar rDo rje gdan pa Kun dga' rnam rgyal (1432-1496)." MA at the Department of Indian and Tibetan Studies (Asien-Afrika-Institut), University of Hamburg.

____ 2017. "Putting Yar rgyab on the Map." In: Volker Caumanns and Marta Sernesi (eds.). *Fifteenth Century Tibet: Cultural Blossoming and Political Unrest.* (LIRI Seminar Proceedings Series, 8). Nepal: Lumbini International Research Institute.

Ferrari Alfonsa, 1958. *Guide to the holy places of central Tibet*. Completed and edited by Luciano Petech, with the collaboration of Hugh Richardson. Roma: Istituto italiano per il Medio ed Estremo Oriente.

Gellner David, 1989. "Monkhood and Priesthood in Newar Buddhism." In: Bouillier Véronique and Gérard Toffin, *Prêtrise, pouvoirs et autorité en Himalaya*. Paris: Editions de l'EHESS, 165-192.

Genet Jean-Philippe, 2015. "Usages du travail de Bourdieu en histoire médiévale." In: Catherine Leclercq et al. (eds.), *Bourdieu et les sciences sociales: receptions et usages*. Paris: la Dispute, pp. 247-263.

Germano David, 2004a. "Living Relics of the Buddha(s) in Tibet." *In:* David Germano and Kevin Trainor (eds.), *Embodying the Dharma: Buddhist Relic Veneration in Asia*. Albany: State University of New York Press, pp. 51-91.

____ 2004b. "An Introduction to Tibetan Buddhism." In: *THL Tibetan Religions and Sects Encyclopedia*.https://collab.its.virginia.edu/wiki/thlencyclopedias/Tibetan%20Buddhism.html (accessed 2017.07.18)

Gold Daniel, 1987. *The Lord as Guru: Hindi Sants in North Indian Tradition.* New York: Oxford University Press.

Goldstein, Melvyn C., 1998. "The revival of monastic life in Deprung Monastery." In: Melvyn C. Goldstein and Matthew T. Kapstein (eds): *Buddhism in Contemporary Tibet: Religious Revival and Cultural Identity*. Berkeley: University of California Press, pp. 15-52.

Gray David, 2013. "The Tantric Family Romance: Sex and the Construction of Social Identity in Tantric Buddhist Ritual. In: Liz Wilson (ed.), *Family in Buddhism*. Albany: State University of New York. pp. 43-65.

Guidoni Rachel, 2006. “Les reliques dans le monde tibétain.” Thèse de doctorat, Université Paris Ouest Nanterre La Défense, 2006.

Gyatso Janet, 1998. *Apparitions of the Self: The Secret Autobiographies of a Tibetan Visionary*. Princeton: Princeton University Press.

Haarh Erik, 1969. The *Yar-Luṅ dynasty: a study with particular regard to the contribution by myths and legends to the history of Ancient Tibet and the origin and nature of its kings*. København: G.E.G. Gad's Forlag.

Hadano Hakukyū, 1959. “A historical study in the problems concerning the diffusion of tantric buddhism in India.” In: *Religious Studies in Japan*. Tokyo: Maruzen.

Haddad Élie, « Qu'est-ce qu'une “maison” ? De Lévi-Strauss aux recherches anthropologiques et historiques récentes », *L'Homme*, 2014/4, n° 212, p. 109-138.

Harding Sarah, 2010. *Niguma: Lady of Illusion*. Ithaca, Snow Lion Publications.

Harrington Laura, 2002. “A View of Mañjuśrī: Wisdom and its Crown-Prince in Pāla-period India.” PhD thesis, Columbia University.

Heimbel Jörg, 2014. “Ngor chen Kun dga’ bzang po (1382 – 1456): An Investigation into the Life and Times of the Founder of the Ngor Subschool of the Sa skya Order.” PhD thesis, Universität Hamburg.

Heller Amy, 1994. “Ninth Century Buddhist Images Carved at lDan Ma Brag to Commemorate Tibeto-Chinese Negotiations.” In: Per Kværne (ed.), *Tibetan Studies: Proceedings of the 6th International Seminar of the International Association for Tibetan Studies, Fagernes 1992*. Oslo: The Institute for Comparative Research in Human Culture, vol.1, pp. 335-349 & Appendix to Volume 1, pp.12-19.

Holmes-Tagchungdarpa Amy, 2013. “Bone and Heart Sons: Biological and Imagines Kin in the Creation of Family Lineage in Tibetan Buddhism. In: Liz Wilson (ed.), *Family in Buddhism*. Albany: State University of New York. pp. 67-88.

____ 2014. *The Social Life of Tibetan Biography: Textuality, Community, and Authority in the Lineage of Tokden Shakya Shri*. Lanham: Lexington Books.

Horlemann Bianca, 2012. “Buddhist Sites in A mdo and Former Longyou from the 8th to the 13th Century.” In: C. Scherrer-Schaub (ed.), *Old Tibetan Studies Dedicated to the Memory of Ronald E. Emmerick*. Leiden: Brill, pp. 119-157.

Hou Haoran, 2017. “Notes on the Translation and Transmission of the Saṃpuṭa and Cakrasaṃvara Tantras in the Xixia Period (1038–1227).” In: Yael Bentor and Meir Shahar (eds), *Chinese and Tibetan Esoteric Buddhism*. Leiden: Brill, pp. 355-376.

Isaacson Harunaga and Francesco Sferra, 2015. “Tantric Literature: Overview South Asia.’ In: *Brill’s Encyclopedia of Buddhism*. Leiden: Brill, pp. 307-319.

Jackson David P., 1989. *The Early Abbots of ’Phan-po Na-lendra: The Vicissitudes of a Great Tibetan Monastery in the 15th Century*. Wien: Arbeitskreis für Tibetische und Buddhistische Studien.

____ 2009. *Patron and Painter: Situ Panchen and the Revival of the Encampment Style, with an essay by Karl Debreczeny*. New York: Rubin Museum of Art.

____ 2015. “Branch Monasteries of Gongkar Dorjeden and Phenpo Nalendra, Two Sakya Convents in Central Tibet.” In: Olaf Czaja & Guntram Hazod (eds.), *Festschrift for Per K. Sørensen on the Occasion of His 65th Birthday*. Wiesbaden: Dr. Ludwig Reichert Verlag, pp. 243-252.

Jackson David and Mathias Fermer, 2016. *A Revolutionary Artist of Tibet: Khyentse Chenmo of Gongkar*. New York: Rubin Museum of Art.

Kano Kazuo, 2007. “A Critical Edition of rNgog Blo ldan shes rab's sPring yig bdud rtsi'i thig le.” *Mikkyōbunka Kenkyūjokiyō*, 20, pp. 1–50.

____ 2015. “Transmission of Sanskrit manuscripts from India to Tibet: In: the case of a manuscript collection in possession of Atiśa Dīpaṃkaraśrījñāna.” In: Carmen Meinert (ed.), *Periphery as Centre-Transfer of Buddhism in Central Asia*. Leiden: Brill, pp. 82–117.

Kapstein Matthew, 1980. “The Shangs-pa bKa’-brgyud: an unknown school of Tibetan Buddhism”. In: *Studies in Honor of Hugh Richardson*, eds. Michael Aris and Aung San Suu Kyi. Warminster: Aris and Phillips, pp. 138-144.

____ 1995. “gDams-ngag: Tibetan Technologies of the Self”. In: *Tibetan Literature: Studies in Genre*, ed. Roger Jackson and José Cabezón. Ithaca: Snow Lion Publications, pp. 275-89.

____ 2000. *The Tibetan Assimilation of Buddhism: Conversion, Contestation, and Memory*. New York: Oxford University Press.

____ 2006. “New Light on an Old Friend: PT 849 Revisited.” In: Ronald Davidson and Christian Wedemeyer (eds), *Tibetan Buddhist Literature and Praxis: Studies in Its Formative Period, 900-1400*. Leiden: Brill, pp. 9-30.

____ 2007. “Tibetan Technologies of the Self, Part 2.” In: Ramon Prats (ed.), *The Pandita and the Siddha*. Dharamsala: Amnye Machen Research Institute.

Karmay Samten G., 2014. *The Illusive Play: the Autobiography of the Fifth Dalai Lama*. Chicago: Serindia Publications.

Kauffmann Elisabeth, 2014. “ ’Les trois types purs de la domination légitime’ de Max Weber: les paradoxes de la domination et de la liberté.” Sociologie, N°3, vol. 5|2014. http://sociologie.revues.org/2393

Kemp Casey, 2015. “Merging Ignorance and Luminosity in Early Bka’ brgyud Bsre ba Literature.” *Zentralasiatische Studien*, 44, pp. 35-50.

Kerihuel Thomas, 2011. “The Early History of Mgar: When History Becomes Legend.” *Revue d’Études Tibétaines*, 21, pp. 105-121.

Kohn Richard J., 2001. *Lord of the Dance: the Mani Rimdu Festival in Tibet and Nepal*. Albany: State University of New York Press.

____ 2007. “A Rite of Empowerment.” In: Donald S. Lopez (ed.), *Religions of Tibet in Practice*. Princeton: Princeton University Press, pp. 225-233.

Kongtrül Lodrö Thayé & the International Translation Committee, 1998. *Buddhist Ethics*. Ithaca: Snow Lion.

____ Richard Barron, 2003. *The Autobiography of Jamgön Kongtrul: A Gem of Many Colors*. Ithaca: Snow Lion Publications.

____ Elio Guarisco & Ingrid McLeod (tr.), 2005. *The Treasury of Knowledge, Book 6, Part 4: Systems of Buddhist Tantras*. Ithaca: Snow Lion.

____ & Sarah Harding (tr.), 2007. *The Treasury of Knowledge, Book 8, Part 4: Esoteric Instructions*. Ithaca: Snow Lion.

____ Elio Guarisco & Ingrid McLeod (tr.), 2008. *The Treasury of Knowledge, Book 8, Part 3: The Elements of Tantric Practice*. Ithaca: Snow Lion.

____ & Ngawang Zangpo (tr.), 2010. *The Treasury of Knowledge, Book 2, Part 3 and 4: Buddhism’s Journey to Tibet*. Ithaca: Snow Lion.

____ & Richard Barron (tr.), 2011a. *The Treasury of Knowledge, Book 9 & 10: Journey and Goal*. Ithaca: Snow Lion.

____ & Yeshe Gyamtso (tr.), 2011b. *Hundred Tertöns*. Woodstock: KTD Publications.

____ & Richard Barron, 2013. *The Catalog of the Treasury of Precious Instructions by Jamgön Kongtrul Lodrö Taye.* New York: Tsadra Foundation.

Kragh Ulrich Timme 2011. "Prolegomenon to the Six Doctrines of Nā ro pa: Authority and Tradition." In: *Mahāmudrā and the bKa'-brgyud Tradition: PIATS 2006: Proceedings of the Eleventh Seminar of the International Association for Tibetan Studies, Königswinter 2006.* Ed. by Jackson Roger and Kapstein Matthew T. Andiast: International Institute for Tibetan and Buddhist Studies, pp. 131-178.

Kramer Jowita, 2008. "The gSan yig of A mes Zhabs: Observations Regarding its Stylistic and Formal features. In: Orna Almogi (ed.), *Contributions to the Buddhist Literature (PIATS 2006: Proceedings of the Eleventh Seminar of the International Association for Tibetan Studies)*. Königswinter: IITBS, pp. 489-511.

Kramer Ralf, 2007. *The Great Tibetan Translator: Life and Works of Rngog Blo ldan shes rab (1059-1109)*. München: Indus Verlag.

____ 2013. "The Significant Leap from Writing to Print: Editorial Modification in the First Printed Edition of the Collected Works of Sgam pop pa Bsod nams rin chen." *Journal of the International Association of Tibetan Studies*, no. 7, pp. 365-425.

Lang Karen, 1990. "Pa-tshab Nyi-ma-grags and the Introduction of Prāsaṅgika into Tibet." In: L. Epstein & R. Sherburn (eds), *Reflections on Tibetan Culture.* Lewiston: Mellen Press, pp. 131-142.

Lemieux Cyril, 2011. "Le crepuscule des champs: limites d'un concept ou disparition d'une réalité historique?" In: Michel de Fornel et Albert Ogien (eds), *Bourdieu, théoricien de la pratique.* Paris: Editions de l'Ecole des Hautes Etudes en Sciences Sociales, pp. 75-100.

Lévi Sylvain, 1931. "Un nouveau document sur le bouddhisme de basse époque dans l'Inde." *Bulletin of the School of Oriental Studies. Vol. 6, No. 2, A Volume of Indian Studies Presented by His Friends and Pupils to Edward James Rapson, Professor of Sanskrit in the University of Cambridge, on His Seventieth Birthday, 12th. May, 1931*, pp. 417-429.

Lévi-Strauss Claude, 1958. *Anthropologie Structurale*. Paris: Plon. (English Translation, 1963. *Structural Anthropology*. New York: Basic Books.)

____ 1982). The Way of the Mask. Seattle: University of Washington Press.

____ 1983. "Histoire et ethnologie. " *Annales. Économies, Sociétés, Civilisations*. 38ᵉ année, n°6, pp. 1217-1231.

Lhalungpa Lobzang, 1977. *The Life of Milarepa*. New York: Dutton. Reprint, Boston: Shambhala Publications, 1984.

Linrothe Robert N., 1999. *Ruthless Compassion: Wrathful Deities in Early Indo-Tibetan Esoteric Buddhist Art*. Boston: Shambhala, 1999.

Lo Bue Erberto, 1997. "The Role of Newar scholar in transmitting the Indian Buddhist heritage to Tibet (c. 750-c. 1200)." In: Samten Karmay and Sagant Philippe (eds), *Les habitants du toit du monde: Hommage à Alexander W. MacDonald*. Nanterre: Société d'éthnologie, pp. 630-658.

Lopez Donald, 1987. *The Heart Sūtra Explained*. New York: State University of New York Press.

Macdonald Ariane, 1971. "Une lecture des Pelliot Tibétain 1286, 1287, 1038, 1047, et 1290 : essai sur la formation et l'emploi des mythes politiques dans la religion royale de Sroṅ-

bcan sgam-po." In: *Etudes tibétaines dédiées à la mémoire de Marcelle Lalou*. Paris: Adrien Maisonneuve.

Martin Dan, 1994. "Pearls from Bones: Relics, Chortens, Tertons and the Signs of Saintly Death in Tibet." *Numen*, vol. 41(3), pp. 273–324.

____ 1997. *Tibetan Histories: a Bibliography of Tibetan-Language Historical Works*. London: Serindia Publications.

____ 2016. *Tibskrit Philology*. https://www.dropbox.com/s/1swvt6iti39s0yj/Tibskrit%202016.docx?dl=0 (acc. 2017/09/25)

Masahide Mori, 1997. "The Vajrāvali of Abhayākaragupta: A Critical Study, Sanskrit edition of Selected Chapters and Complete Tibetan Versions." PhD thesis, University of London.

Mathes Klaus-Dieter 2007. *A Direct Path to the Buddha Within: Gö Lotsawa's Mahāmudrā Interpretation of the Ratnagotravibhāga*. Boston: Wisdom Publications.

____ 2008. "The 'Succession of the Four Seals' (*Caturmudrānvaya*) Together with Selected Passages from Karopa's Commentary." *Tantric Studies*, vol. 1. Centre for Tantric Studies, Universität Hamburg, pp. 89-130.

____ 2011. "The Collection of 'Indian Mahāmudrā Works' (*phyag chen rgya gzhung*) Compiled by the Seventh Karma pa Chos grags rgya mtsho." In: Roger Jackson and Matthew Kapstein (eds.), *Mahāmudrā and the Bka'-brgyud Tradition. PIATS 2006: Proceedings of the Eleventh Seminar of the International Association for Tibetan Studies, Königswinter 2006*. Andiast: International Institute for Tibetan and Buddhist Studies, pp. 89-130.

____ 2013. "bKa' brgyud Mahāmudrā: "Chinese rDzogs chen" or the Teachings of the Siddhas?" In: Christoph Cüppers, Robert Mayer and Michael Walter (eds.), *Tibet after Empire. Culture, Society and Religion between 850-1000. Proceedings of the Seminar Held in Lumbini, Nepal, March 2011*. Lumbini: Lumbini International Research Institute, pp. 267-294.

____ 2015. *A Fine Blend of Mahāmudrā and Madhyamaka: Maitrīpa's Collection of Texts on Non-Conceptual Realization (Amanasikāra)*. Wien: Verlag der Österreischen Akademie der Wissenschaften.

McCleary Rachel, and Leonard Van der Kuijp, 2010. "The Market Approach to the Rise of the Geluk School, 1419-1642." *The Journal of Asian Studies*, vol. 69/1, pp. 149-180.

McRae John R., 2003. *Seeing through Zen: Encounter, Transformation, and Genealogy in Chinese Chan Buddhism*. Berkeley: University of California Press.

Mei Ching Hsuan 2009. "The Development of 'Pho-ba Liturgy in Medieval Tibet." PhD Dissertation, Rheinischen Friedrich-Wilhelms-Universität zu Bonn.

Mengele Irmgard, 2010. "Chilu ('Chi bslu): Rituals for "Deceiving Death." In: José Ignacio Cabezón (ed.), *Tibetan Ritual*. Oxford and New York: Oxford University Press, pp. 103-129.

Mullin Glenn H. 1996. *Tsongkhapa's six yogas of Naropa*. Ithaca: Snow Lion Publications.

____ 1997. *Readings on the six yogas of Naropa*. Ithaca: Snow Lion Publications.

____ 2006. *The practice of the Six Yogas of Naropa*. Ithaca: Snow Lion Publications.

Nālandā Translation Committee (Tr.), 1999. *The Rain of Wisdom: the Essence of the Ocean of True Meaning Bringing the Rain of Wisdom, the Spontaneous Self-liberation, the*

Blazing Great Bliss, the Quick Path to Realization of the Supreme Siddhis. The Vajra Songs of the Kagyü Gurus. Boston: Shambhala.

____ 2007. "The Life of Tilopa." In: Donald S. Lopez (ed.), *Religions of Tibet in Practice*. Princeton: Princeton University Press, pp. 137-156.

Padoux André, 2010. *Comprendre le tantrisme: les sources hindoues*. Paris: Albin Michel.

Parkin Robert and Linda Stone (eds), 2004. *Kinship and Family: An Anthropological Reader*. Oxford: Blackwell Publishing Ltd.

Petech Luciano, 2013a (1950). The Dsungar Invasion of 1717." In: Saul Mullard (ed.) *Critical Readings on the History of Tibetan Foreign Relations*. Leiden: Brill, pp. 511-516.

____ 2013b (1950). "Dsungar Occupation and Tibetan Risings." In: Saul Mullard (ed.) *Critical Readings on the History of Tibetan Foreign Relations*. Leiden: Brill, pp. 527-538.

Philippart Guy (ed.), 1994. *Hagiographies, 1. Histoire internationale de la littérature hagiographique latine et vernaculaire en Occident des origines à 1550*. Turnhout: Brepols.

Quintman Andrew, 2006. "Milarepa's Many Lives: Anatomy of a Tibetan Biographical Corpus." PhD thesis, University of Michigan.

____ 2014. *The Yogin and the Madman: Reading the biographical corpus of Tibet's Great Saint Milarepa*. New York: Columbia University Press.

____ 2015. "Wrinkles in Time: On the Problem of Mi la ras pa's Dates." *Acta Orientalia*, no. 74, pp. 3-26.

Ramble Charles, 1984. "The Lamas of Lubra: Tibetan Bonpo Householder Priests in Western Nepal." Phd Dissertation, University of Oxford.

____ 2008a. *The Navel of the Demoness: Tibetan Buddhism and Civil Religion in Highland Nepal*. Oxford and New-York: Oxford University Press.

____ 2008b. *Tibetan Sources for a Social History of Mustang, Nepal. Volume 1: the Archive of Te*. Halle: International Institute for Tibetan and Buddhist Studies.

____ 2010. "History from Below: an Introduction to Three Archival Collections from Mustang, Nepal." In: Hildegard Diemberger and Karma Phuntso (eds), *Ancient Treasures, New Discoveries*. Halle: International Institute for Tibetan and Buddhist Studies.

____ 2012a. *Tibetan Sources for a Social History of Mustang, Nepal. Volume 2: the Archives of the Tantric Priests of Tshognam*. Halle: International Institute for Tibetan and Buddhist Studies.

____ 2012b. *Tibetan Sources for a Social History of Mustang, Nepal. Volume 3: the Archive of Baragaon*. Halle: International Institute for Tibetan and Buddhist Studies

Raudsepp Kadri, 2011. "Rnying ma and Gsar ma: First Appearances of the Terms during the Early Phyi dar (Later Spread of the Doctrine)." *Revue d'Etudes Tibétaines*, 22, pp. 25-46.

Richardson Hugh, 1998. *High Peaks, Pure Earth: Collected Writings on Tibetan History and Culture*. London: Serindia Publications.

Roberts Peter Alan, 2007. *The Biographies of Rechungpa: The evolution of a Tibetan hagiography*. Oxon: Routledge.

Roerich George N. & Gedun Choepel, 1979. *The Blue Annals by Lotsawa gŽon Nu dPal*. Delhi: Motilal Banarsidass Publishers. (= BA)

Roesler Ulrike, 2008. "On the History of Histories: the Case of the Bka' gdams pa-s." In: Orna Almogi (ed.), *Contributions to Tibetan Buddhist Literature. (Proceedings of the 11th*

Seminar of the International Association for Tibetan Studies, Königswinter 2006.) Halle: International Institute for Tibetan and Buddhist Studies, pp. 393-413.

Ruegg, D. Seyfort, 1991). "*mchod yon, yon mchod* and *mchod gnas*/*yon gnas*: On the Historiography and Semantics of a Tibetan Religio-social and Religio-political Concept." In: Ernst Steinkellner (ed.), *Tibetan History and Language: Studies Dedicated to Uray Geza on His Seventieth Birthday*. Vienna: Arbeitskreis für Tibetische und Buddhistische Studien.

____ 2004. "Introductory remarks on the spiritual and temporal orders." In: Christoph Cüppers (ed.), *The Relationship between Religion and State (chos srid zung 'brel) in Traditional Tibet*. Lumbini: Lumbini International Research Institute.

Ryavec Karl, 2015. *A Historical Atlas of Tibet.* Chicago: University of Chicago Press.

Sakurai Munenobu, 1987a. "A Study of the ḥJam-dpal-gsaṅ-ldan School mainly based upon the *Nāmamantrārthāvalokinī* (1)." *Mikkyōgaku Kenkyū (The Journal of Esoteric Buddhist Studies),* 19, pp. 87-109.

____ 1987b. "A Study of the ḥJam-dpal-gsaṅ-ldan School mainly based upon the *Nāmamantrārthāvalokinī* (2)." *Journal of Indian and Buddhist Studies (Indogaku Buddhōgaku Kenkyū)* 36:1, pp. 342-345.

Samuel Geoffrey, 1993. *Civilized Shamans: Buddhism in Tibetan Societies*. Washington: Smithsonian Books.

Samuels Jonathan, 2016. "Are We Legend? Reconsidering Clan in Tibet." *Revue d'Etudes Tibétaines*, 37, pp. 293-314.

Sanderson Alexis, 2013. "The Śaiva Age: The Rise and Dominance of Śaivism during the Early Medieval Period." In: Shingo Einoo (ed.), *Genesis and Development of Tantrism*. Tokyo: Institute of Oriental Culture, vol. 23, pp. 41-350.

Schaeffer Kurtis and Leonard Van der Kuijp, 2009. *An Early Tibetan Survey of Buddhist literature: the Bstan pa rgyas pa rgyan gyi nyi 'od of Bcom Idan ral gri*. Cambridge: Harvard University Press.

Scheuermann Rolf, 2015. "When Sūtra Meets Tantra – Sgam po pa's Four Dharma Doctrine as an Example for his Synthesis of the Bka' gdams- and Mahāmudrā-Systems". PhD thesis, University of Vienna.

Schneider Johannes, 2010. *Vāgīśvarakīrtis Mṛtyuvañcanopadeśa, eine buddhistische Lehrschrift zur Abwehr des Todes.* Wien: Verlag der Österreichischen Akademie der Wissenschaften.

Schroeder Ulrich von, and Heidi von Schroeder, 2009. *Tibetan Art of the Alain Bordier Foundation*. Hong Kong: Visual Dharma Publications.

Schwieger Peter, 1990. *Tibetische Handschriften und Blockdrucke (10),* Die mTshur-phu-Ausgabe der Sammlung Rin-chen gter-mdzod chen-mo, Bände 1 bis 14. Stuttgart: Franz Steiner.

_____ 1995. *Tibetische Handschriften und Blockdrucke, Teil 11* Die mTshur-phu-Ausgabe der Sammlung Rin-chen gter-mdzod chen-mo, Bände 14 bis 34. Stuttgart: Franz Steiner.

_____ 1999. *Tibetische Handschriften und Blockdrucke, Teil 12.* Die mTshur-phu-Ausgabe der Sammlung Rin-chen gter-mdzod chen-mo. Stuttgart: Franz Steiner.

_____ 2009. *Tibetische Handschriften und Blockdrucke (13)* Die mTshur-phu-Ausgabe der Sammlung Rin-chen gter-mdzod chen-mo Bände 40 bis 52. Stuttgart: Franz Steiner.

_____ 2010. “Collecting and Arranging the gTer ma Tradition: Kong sprul’s Great Treasury of the Hidden Teachings.” In: Anne Chayet et al. (eds) *Édition, éditions: l’écrit au Tibet, évolution et devenir*. München: Indus Verlag. pp. 321–335.

Sernesi Marta, 2007. *The Aural Transmission of Saṃvara and Ras chung pa’s Legacy*. PhD thesis, Università degli Studi di Torino.

____ 2010. “To Establish the qualities of the Master. Considerations on early *bKa’ brgyud* hagiographical writings.” In: *Tīrthayātrā: Essays in Honour of Stefano Piano*. Alessandria: Edizioni dell’Orso. pp. 401-424.

____ 2011a. “The Aural Transmission of Samvara: An Introduction to Neglected Sources for the Study of the Early Bka’ brgyud.” In: Roger Jackson and Matthew Kapstein (eds.), *Mahāmudrā and the bKa’-brgyud Tradition: PIATS 2006: Proceedings of the Eleventh Seminar of the International Association for Tibetan Studies, Königswinter 2006*. Andiast: International Institute for Tibetan and Buddhist Studies. pp. 179-210.

____ 2011b: “A Continuous Stream of Merit: The Early Reprints of Gtsang Smyon Heruka’s Hagiographical Works.” *Zentralasiatische Studien (ZAS) des Seminars für Sprach- und Kulturwissenschaft Zentralasiens der Universität Bonn*. Ed. by Peter Schwieger et al. Andiast: International Institute for Tibetan and Buddhist Studies. vol. 40/2011, pp. 179-237.

Shakabpa Tsepon Wangchuk Deden and Derek F. Maher (tr.), 2010. *One Hundred Thousand Moons: An Advanced Political History of Tibet*. Leiden, Brill.

Shastri Lobsang, 1997. “The Fire Dragon Chos ’khor (1076 AD).” In: Helmut Krasser et al. (eds), *Tibetan Studies: Proceedings of the 7th Seminar of the International Association for Tibetan Studies*. Vienna: Österreichischen Akademie der Wissenschafter. pp. 873-882.

Sheehy Michael, 2009. “A Lineage History of Vajrayoga and Tantric Zhentong from the Jonang Kālacakra Practice Tradition.” In: *As Long As Space Endures: Essays on the Kālacakra Tantra*. Snow Lion Publications.

Sihlé Nicolas, 2001. “Les tantristes tibétains (ngakpa), religieux dans le monde, religieux du rituel terrible: étude de Ch’ongkor, communauté villageoise de tantristes du Baragaon (nord du Népal).” PhD thesis, Université Paris X.

____ 2013. *Rituels bouddhiques de pouvoir et de violence: la figure du tantriste tibétain*. Turnhout: Brepols.

____ 2015. “Towards a Comparative Anthropology of the Buddhist Gift (and Other Transfers).” *Religion Compass*, n°9/11, pp. 352–385.

Skorupski Tadeusz, 1996. “The Saṃpuṭa-tantra, Sanskrit and Tibetan Versions of Chapter One.” *The Buddhist Forum*, vol. IV.

____ 2001. “The Saṃpuṭa-tantra, Sanskrit and Tibetan Versions of Chapter Two.” *The Buddhist Forum*, vol. VI.

Smith Gene, 2001. *Among Tibetan Texts: History and Literature of the Himalayan Plateau*. Boston: Wisdom Publications.

____ 2004. “Banned Books in the Tibetan Speaking Lands.” *21st Century Tibet Issue: Symposium on Contemporary Tibetan Studies, collected Papers*, pp. 186-195.

Snellgrove David, 1967. *Four Lamas of Dolpo: Autobiographies of Four Tibetan Lamas (15th-18th centuries)*. Oxford: Bruno Cassirer.

Sobisch Jan-Ulrich, 2002. “The ’Records of Teachings Received’ in the Collected Works of A-mes-zhabs: An Untapped Source for the Study of Sa skya pa Biographies.” In: *Tibet,*

Past and Present: Proceedings of the Ninth Seminar of the IATS, 2000. Leiden: Brill, pp. 161-181.

____ 2008. *Hevajra and Lam ’bras literature of India and Tibet as seen through the eyes of A-mes-zhabs*. Wiesbaden: Reichert.

Solonin Kirill, 2015. “Local Literatures: Tangut/Xixia.” In: Jonathan Silk et al. (eds), *Brill’s Encyclopedia of Buddhism*. Leiden: Brill, pp. 844-870.

Sørensen Per K., 2007. *Rare Texts from Tibet: Seven Sources for the Ecclesiastic History of Medieval Tibet*. Lumbini: Lumbini International Research Institute.

Sørensen Per K. and Hazod Guntram, 2007. *Rulers on the Celestial Plain: Ecclesiastic and Secular Hegemony in Medieval Tibet: A Study of Tshal Gung-Than*. Wien: Verlag der Österreichischen Akademie der Wissenschaften.

Stearns Cyrus, 1999. *The Buddha from Dolpo: a Study of the Life and Thought of the Tibetan Master Dolpopa Sherab Gyaltsen*. New York: SUNY Press.

____ 2001. *Luminous Lives: The Story of the Early Masters of the Lam ’bras Tradition in Tibet*, Boston: Wisdom Publications.

____ 2006. *Taking the Result as the Path: Core Teachings of the Sakya Lamdré Tradition*. Boston: Wisdom Publications.

Stein Rolf, 1959. *Les Tribus anciennes des marches sino-tibétaines*. Paris: Imprimerie Nationale.

____ 2010 (1984). “Tibetica Antiqua II: The Use of Metaphors for Honorific Distinctions in the Epoch of the Tibetan Kings.” In: *Rolf Stein’s Tibetica Antiqua*. Leiden: Brill, pp. 97-111.

Stoddard Heather, 2004. “"Rekindling the Flame": A Note on Royal Patronage in Tenth Century Tibet. The Princely Descendants of Lang Dar Ma, the Six Sog Mo of Khams, the Ten Men of Dbus Gtsang and the Founding of Temples in Central Tibet in l0th & 11th C”. In: Christoph Cüppers ed), *The Relationship Between Religion and State (chos Srid Zung ’brel) in Traditional Tibet: Proceedings of a Seminar Held in Lumbini, Nepal, March 2000*. Lumbini: Lumbini International Research Institute.

Stott David J., 1985. *The History and Teachings of the Early Dwags-po bka’-brgyud Tradition in India and Tibet*. PhD thesis, Faculty of Theology, University of Manchester

Strong John S., 2005 (1987). “Relics.” In: Lindsay Jones (ed.), *Encyclopedia of Religion (Second Edition)*. Thomson-Gale, vol. 11, pp. 7686-7692.

Sugiki Tsunehiko, 2003. “Astrology in Mother-Tantric Literature.” *Journal of Indian and Buddhist Studies*, 51(2), pp. 1010-1007.

____ 2005. “Cycle of Time, Calendar, and Fortunetelling in the Catuṣpīṭha and the Cakrasaṃvara Buddhist Literatures.” *The Memoirs of the Institute of Oriental Culture*, No. 147. pp. 264-194.

Szántó Péter-Dániel, 2008. “Antiquarian Enquiries into the Initiation Manuals of the Catuṣpīṭha.” *Newsletter of the N[epal]-G[erman]M[anuscript] C[ataloguing] P[roject]*, no. 6, pp. 2-12.

____ 2012. “Selected Chapters from the Catuṣpīṭhatantra.” PhD thesis, Balliol College, Oxford.

____ 2015a. “Early Works and Persons Related to the So-called Jñānapāda School.” JIABS 36/37, pp. 537–562.

____ 2015b. “Catuṣpīṭha.” In: *Brill Encyclopedia of Buddhism*, vol. 1, pp. 320-325.

____ 2015c. “Hevajratantra.” In: *Brill Encyclopedia of Buddhism*, vol. 1, pp. 334-340.

Tachikawa Musashi, bSod nams rgya mtsho, 1989. *The Ngor Mandalas of Tibet: Plates*. Tokyo: Centre for East Asian Cultural Studies.

____ 1991. *The Ngor Mandalas of Tibet: Listings of the Mandala Deities*. Tokyo: Centre for East Asian Cultural Studies.

Taenzer Gertraud, 2012. *The Dunhuang Region during Tibetan Rule (787-848): A Study of the Secular Manuscripts Discovered in the Mogao Caves*. Wiesbaden: Harrassowitz Verlag.

Taniaka Mimaki, 2013. *Mitrayogin's 108 Maṇḍalas: An Image Database*. Kathmandu: Vajra Publications.

Tāranātha, Chimpa Lama & Chattopadhyaya Alaka, 1970: *Tāranātha's History of Buddhism in India*. Simla: Indian Institute of Advanced Study.

Tāranātha, Templeman David, 1983. *Tāranātha's bKa' Babs Bdun Ldan: The Seven Instruction Lineages*. Dharamsala: Library of Tibetan Works & Archives.

Tatz Mark, 1987. "The Life of the Siddha-Philosopher Maitrīgupta." *Journal of the American Oriental Society*, vol. 107.4, pp. 695-711.

____ 1988. "Maitrī-pa and Atiśa" In: Helga Uebach and Jampa L. Panglung (eds), *Tibetan studies: Proceedings of the 4th seminar of the International Association for Tibetan Studies, Schloss Hohenkammer, Munich 1985*. München: Kommission für Zentralasiatische Studien, Bayerische Akademie der Wissenschaften, pp. 473-481.

Testart Alain, 2007. *Critique du don: Etudes sur la circulation non marchande*. Paris: Syllepse.

____ 2013. "What is a gift?" *Hau: Journal of Ethnographic Theory*, 3(1), pp. 249-261 (translation of chap. 1 of Testart 2007).

Tiso Francis, 2010. *Liberation in one lifetime: biographies and teachings of Milarepa*, Idernia: Proforma.

Thuken Losang Chökyi Nyima and Geshé Lhundup Sopa (tr.), 2009. *The Crystal Mirror of Philosophical Systems: A Tibetan Study of Asian Religious Thought.* Boston: Wisdom Publications.

Torricelli Fabrizio, 1993a. "The Tibetan Text of Tilopa's Mahāmudropadeśa". *East and West*, vol. 41(1-4), pp. 205-229.

____ 1993b. "*Chos drug* and *bKa'-babs bzhi*: Material for a biography of the *Siddha* Tilopa". *East and West*, vol. 43(1-4), pp. 185-198.

____ 1996. "The Tibetan Text of Tilopa's Ṣaḍdharmopadeśa". *East and West*. Vol. 46(1-2), pp. 145-166.

____ 1997. "A Tanjur Text on gTum-mo: Tôhoku no. 2332 – I." *The Tibet Journal*. Dharamsala: Library of Tibetan Works and Archives, vol. 21, pp. 30-46.

____ 1998a. "A Thirteenth Century Tibetan Hymn to the Siddha Tilopa." *The Tibet Journal*, vol. 23, pp. 3-17.

____ 1998b. "The Tibetan Text of the Karnatantravajrapada". *East and West*. Vol. 48(3-4), pp. 385-425.

Torricelli Fabrizio and Āchārya Sangye T. Naga, 1995. *The Life of Mahasiddha Tilopa by Mar-pa Chos-kyi bLo-gros*. Dharamsala: LTWA.

Townsend Dominique, 2012. "Materials of Buddhist Culture: Aesthetics and Cosmopolitanism at Mindroling Monastery." PhD thesis, Columbia University.

Trainor Kevin, 2004. "Introduction: Beyond Superstition." In: David Germano and Kevin Trainor (eds), *Embodying the Dharma: Buddhist Relic Veneration in Asia*. Albany: State University of New York Press, pp. 1-26.

Travers Alice, 2009. “La noblesse tibétaine du Ganden phodrang (1895-1959): permanences et transitions.” PhD thesis, Université Paris Ouest-Nanterre la Défense.

Tribe Anthony, 1994. *The Names of Wisdom: a Critical Edition and Annotated Translation of Chapters 1-5 of Vilāsavajra’s Commentary on the Nāmasaṃgīti, with Introduction and Textual Notes.* PhD thesis, University of Oxford.

____ 1997. “Mañjuśrī and ’The Chanting of Names’ (Nāmasaṃgīti): Wisdom and its Embodiment in an Indian Mahāyāna Buddhist Text.” In: P. Connolly and S. Hamilton (eds.), *Indian Insights: Buddhism, Brahmanism and Bhakti. Papers from the Annual Spalding Symposium on Indian Religions*. London: Luzac Oriental, pp. 109–36.

____ 2000. “Mantrayāna/Vajrayāna: Tantric Buddhism in India”. In: Paul Williams (ed.), *Buddhist Thought*. London: Routledge, pp. 202-204.

____ 2016. *Tantric Buddhist practice in India: Vilāsavajra’s commentary on the Mañjuśrīnāmasaṃgīti*. London: Routledge.

Trungram Gyaltrul Rinpoche Sherpa 2004. “Gampopa, the Monk and the Yogi: His Life and Teachings.” PhD thesis, Harvard University.

Tsangnyön Heruka and the Nālandā Translation Committee (Tr.) 1982. *The Life of Marpa the Translator: Seeing Accomplishes All*. Boston: Shambhala Publications.

Tsangnyön Heruka, Andrew Quintman, 2010. *The Life of Milarepa*. New York: Penguin Books.

Tsongkhapa and Gavin Kilty (tr.), 2013. *A Lamp to illuminate the five stages: teachings on Guhyasamaja tantra*. Boston: Wisdom Publications.

Tucci Giuseppe, 1930. “On some aspects of the doctrine of Maitreya[nātha] and Asaṅġa.” *Journal of the Asiatic Society of Bengal*, 26, pp. 138-158.

____ 1949. *Tibetan Painted Scrolls*. Roma: Libreria Dello Stato.

Tuttle Gray, 2017. “Pattern Recognition: Tracking the Spread of the Incarnation Institution through Time and across Tibetan Territory.” *Revue d’Etudes Tibétaines*, 38, pp. 29–64.

Uebach Helga, 1991. “dByar-mo-than and Gon-bu ma-ru. Tibetan Historiographical Tradition on the Treaty of 821/823.” In: E. Steinkellner (ed.), *Tibetan History and Language. Studies dedicated to Uray Géza on His Seventieth Birthday*. Wien: Arbeitskreis für Tibetische und Buddhistische Studien, pp. 497–526.

Uray Géza, 1962. “Old Tibetan dra-ma-drangs.” *Acta Orientalia Academia Scientiarum Hungaricae*, 14, pp. 219-230.

____ 1971. “A propos du tibétain rgod-g-yuṅ.” In: *Études tibétaines dédiées à la mémoire de Marcelle Lalou. Paris:* Adrien Maisonneuve, pp. 553-557.

____ 1972. “The Narrative of Legislation and Organization of the Mkhas-pa'i Dga-ston: The Origins of the Traditions Concerning Sron-brcan Sgam-po as First Legislator and Organizer of Tibet.” *Acta Orientalia*, Tome XXVI(1), pp. 11-68.

Uray Géza and Helga Uebach, 1990. “Clan Versus Thousand-District Versus Army in the Tibetan Empire.” In: Per Kvaerne (ed.), *Tibetan Studies*. Oslo: The Institute for Comparative Research in Human Culture, vol. 2, pp. 913-915.

Urban Hugh, 1997. “Elitism and Esotericism: Strategies of Secrecy and Power in South Indian Tantra and French Freemasonry.” *Numen*, vol. 44, pp. 1-38.

Valentine Jay, 2013. “The Lords of the Northern Treasures: The Development of the Tibetan Institution of Rule by Successive Incarnations.” PhD thesis, University of Virginia.

Van der Kuijp Leonard, 1978. “Phya pa Chos kyi seng ge’s Impact on Tibetan Epistemological Theory.” *Journal of Indian Philosophy*, 5 (1978), pp. 366-379.

____ 1983. *Contributions to the Development of Tibetan Buddhist Epistemology: From the Eleventh to the Thirteenth Century*. Wiesbaden: Franz Steiner Verlag.

____ 1995. "Fourteenth Century Tibetan Cultural History VI: The Transmission of Indian Buddhist *Pramāṇavāda* According to Early Tibetan *gsan yig*." *Asiatische Studien / Études Asiatiques*, XLIX, pp. 919-941.

____ 2000. "On the Fifteenth Century *Lho rong chos 'byung* by Rta tshag Tshe dbang rgyal and Its Importance for Tibetan Political and Religious History." In: Vitali Roberto, Tsering T (eds.), *Aspects of Tibetan History*. *Lungta*, 14, pp. 57-76.

____ 2006. "On the Composition and Printings of the *Deb gter sngon po* by 'Gos lo tsā ba gzhon nu dpal (1392-1481)." *Journal of the International Association of Tibetan Studies*. No. 2, pp. 1-46.

____ 2016. "The Lives of Bu ston Rin chen grub and the Date and Sources of His Chos 'byung, a Chronicle of Buddhism in India and Tibet." *Revue d'Etudes Tibétaines*, 35, pp. 203-308.

Van Schaik Sam, 2015. *Tibetan Zen: Discovering a Lost Tradition*. Boston: Snow Lion.

____ 2016. "Tibetan Buddhism in Central Asia: Geopolitics and Group Dynamics." In: Carmen Meinert (ed.), *Transfer of Buddhism Across Central Asian Networks (7th to 13th Centuries)*. Leiden: Brill, pp. 57-81.

Verter Bradford, 2003. "Spiritual capital: Theorizing religion with Bourdieu against Bourdieu." *Sociological Theory*, vol. 21, no. 2, pp. 150-174.

Veyne Paul, 1971 [1996]. *Comment on écrit l'histoire.* Paris, Seuil.

____ 1976. *L'inventaire des différences: leçon inaugurale au Collège de France*. Paris: Seuil.

Vira Raghu and Lokesh Chandra, 1967. *A New Tibeto-Mongol Pantheon: Bla ma dang yi dam khag gi par ris phyogs bsgrigs*. New Delhi: International Academy of Indian Culture. Vol. 13-15. (W1KG18239)

Vitali Roberto, 1990. *Early Temples of Central Tibet*. London: Serindia Publications.

____ 2002. "The History of the Lineages of gNas rnying Summarised as its 'Ten Greatnesses': a Survey of the Period from the Second Half of the 8th Century to the Beginning of the Sa skya pa Rule." In: Henk Blezer (ed.), *Tibet: Past and Present*. Leiden: Brill, vol. 1, pp. 81-107.

____ 2004. "Glimpses of the History of the rGya Clan with Reference to Nyang stod, Lho mon and Nearby Lands (7th-13th Century)" in Karma Ura and Sonam Kinga (eds), *The Spider and the Piglet*. Thimphu: Centre for Bhutan Studies, pp. 6-20.

____ 2010. "In the Presence of the "Diamond Throne": Tibetans at rDo rje gdan (Last Quarter of the 12th Century to Year 1300)." *The Tibet Journal: the Earth-Ox Papers*. Vol. 34-35. pp. 161-208.

____ 2015. "The Book of Names of Nyang stod bla ma-s: Masters and Events of the Years 997-1354." *Revue d'Etudes Tibétaines*, 31 (Papers for Elliot Sperling).

Wacquant Loïc, 2007. "Pierre Bourdieu." In: Rob Stones (ed.), *Key Sociological Thinkers*. London and New York: Macmillan.

Walter Michael, 2000. "Cheating Death." In: David White (ed.), *Tantra in Practice*. Princeton: Princeton University Press. pp. 605-623.

Walther Marco, 2012. "Zwei historische Quellen zur Überlieferung der rNgog bKa'-brgyud-pa." M.A. thesis, Ludwig-Maximilians-Universität, München.

____ 2016. "Between Family and Transmission Lineage: Two Historical Works of the rNgog bka' brgyud pa." *Revue d'Etudes Tibétaines*, 37, pp. 515-533.

____ 2017. “Gling-ras-pa Padma rdo-rje (1128-1188): Leben und Werk unter besonderer Berücksichtigung des Werkes ‘Eine Fackel, die das Wesentliche bündelt.’” PhD thesis, Ludwig-Maximilans-Universität München: Faculty of Cultural Studies.

Watt James and Anne Wardwell, 1997. *When Silk was Gold: Central Asian and Chinese textiles*. New York: Metropolitan Museum of Art.

Weber Max, 1995 [1922]. *Économie et société, tome 1: les categories de la sociologie; tome 2: l’organisation et les puissances de la société dans leur rapport avec l’économie*. Paris, Pocket.

Wedemeyer Christian, 2006. “Tantalizing Traces of the Labours of the Lotsāwas: Alternative Translations of Sanskrit Sources in the Writings of Rje Tsong kha pa.” In: *Tibetan Buddhist Literature and Praxis: Studies in Its Formative Period, 900-1400*. Leiden: Brill, vol 4, pp. 149-182.

____ 2013. *Making Sense of Tantric Buddhism: History, Semiology, and Transgression in the Indian Traditions.* New York: Columbia University Press.

____ 2014. “Sex, Death and Reform in Eleventh Century Tibetan Buddhist Esoterism: ’Gos Khug pa Lhas btsas, *spyod pa* (*caryā*), and *mngon par spyod pa* (*abhicāra*).” In: Todd Lewis and Bruce McCoy Owens (eds.), *Sucāruvādadeśika: A Festschrift Honoring Professor Theodore Riccardi*. Kathmlanud: Himal Books, pp. 240-260.

Wei Wen, 2013. “The Spread if the Cakrasaṃvara Teachings in Tibet and Xixia between 11th and 12th Centuries: A Study based on Two Chinese Tantric Translations of the Tangut Era and the Tibetan Buddhist History Work.” PhD thesis, Renmin University, Beijing.

Weinberger Steven, 2003. “The Significance of Yoga Tantra and the *Compendium of Principles* (*Tattvasaṃgraha Tantra*) within Tantric Buddhism in India and Tibet.” PhD thesis, University of Virginia.

____ 2010. “The Yoga Tantras and the Social Context of Their Transmission to Tibet.” *Chung-Hwa Buddhist Journal*. Taipei: Chung-Hwa Institute of Buddhist Studies, no. 23, pp. 131-166

Willson Martin and Martin Brauen, 2000. *Deities of Tiebtan Buddhism: the Zürich Paintings of* Icons Worthwhile to See (Bris sku mthoṅ ba don ldan). Boston: Wisdom Publications.

Wylie Turrell, 1978. “Reincarnation: A Political Innovation in Tibetan Buddhism.” In: Louis Ligeti (ed.), *Proceeding of the Csoma de Körös Memorial Symposium, Held at Matrafüred, Hungary, 24-30 September 1976*. Budapest, Akadémmiai Kiadó, pp. 570-586.

Yamamoto Carl, 2009. “Vision and violence: Lama Zhang and the Dialectics of Political Authority and Religious Charisma in Twelfth-Century Central Tibet.” PhD thesis, University of Virginia.

____ 2012. *Vision and Violence: Lama Zhang and the Politics of Charisma in Twelfth-Century Tibet*. Leiden, Boston: Brill

Dargye Yonten, 2001. *History of the Drukpa Kagyud School in Bhutan: 12th to 17th Century A.D*. Thimphu: Yonten Dargye.

Zivkovic Tanya Maria, 2014. *Death and Reincarnation in Tibetan Buddhism: In-Between Bodies*. Abingdon and New York: Routledge.

Plate 14: Dud sol ma according to a sMar pa bka’ brgyud lineage, with Mar pa, rNgog Chos rdor, rNgog mDo sde, and sMar pa Shes rab ye shes in the upper register. Bordier Collection (Béguin 2013, 92)